Title
E.E. REVIEW COURSE - LECTURE XV.

Authors
Martinelli, E.
Brown, L.E.
Brunk, W.O.

Publication Date
1953-02-19

UNIVERSITY OF CALIFORNIA
Radiation Laboratory
Berkeley, California

UCRL 2010

ELECTRICAL ENGINEERING REVIEW COURSE

LECTURE XV

E. Martinelli

(Notes by: L. E. Brown, W. O, Brunk)

- - - - - - - - - - - -

Transmission Lines - Continued:

If one chooses to join two transmission lines of different impedences to make a matched transmission line, then it is required that a transition section of a particular impedence and length be employed.

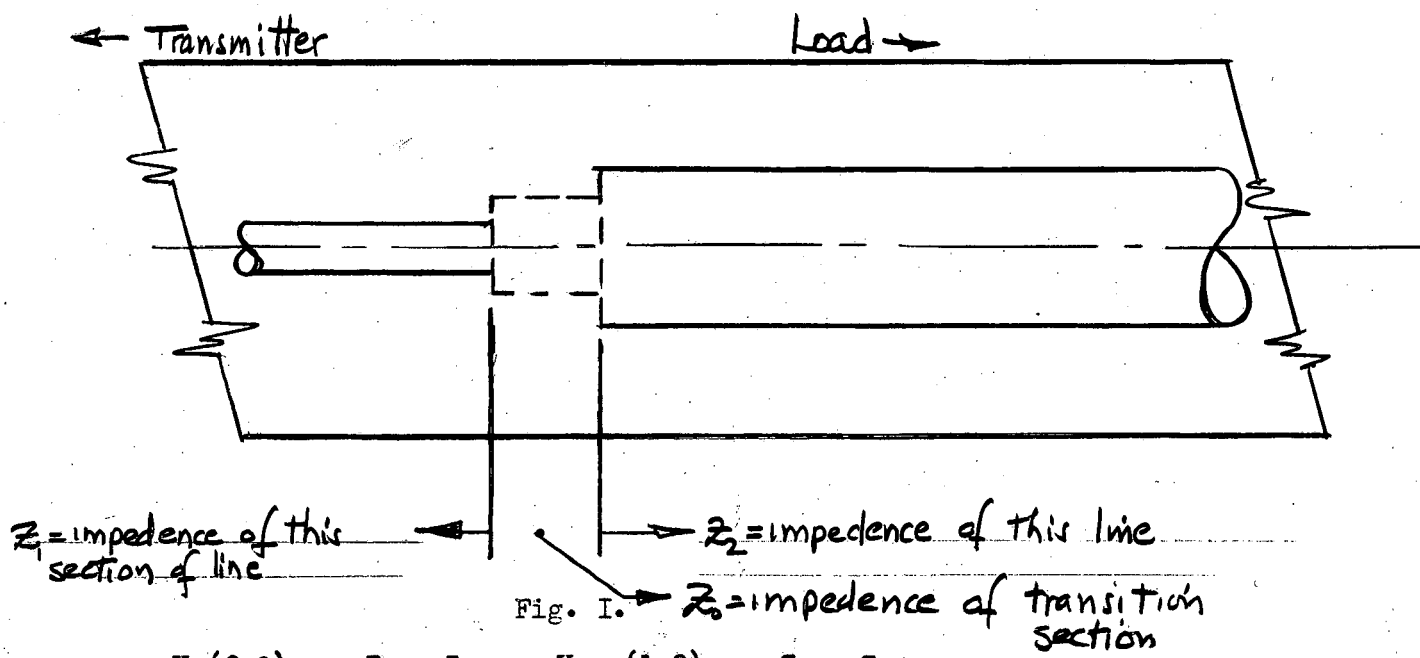

Fig. I.

$$\frac{V-(0,2)}{V+(0,2)} = \frac{Z_2 - Z_0}{Z_2 + Z_0} \; ; \; \frac{V - (1,0)}{V + (1,0)} = \frac{Z_0 - Z_1}{Z_0 + Z_1}$$

where V - (a,b) = reflected wave from b to a,
V + (a,b) = traveling wave from a to b, etc.

If a perfect match is to be made, then:

$$\frac{V - (0,2)}{V + (0,2)} = \frac{V - (1,0)}{V + (1,0)}$$

DISCLAIMER

$$\frac{Z_2 - Z_0}{Z_2 + Z_0} = \frac{Z_0 - Z_1}{Z_0 + Z_1}$$

$$Z_2Z_0 + Z_2Z_1 - Z_0^2 - Z_0Z_1 = Z_2Z_0 - Z_1Z_2 + Z_0^2 - Z_0Z_1$$

$$Z_0 = \sqrt{Z_1Z_2}$$

To make the waves exactly cancel, the transition section must be $(2n + 1)\lambda/4$ long. This will cause the reflected waves from each of the two interfaces to exactly cancel. If one wishes to derive the line at some frequency, other than that for which the transition section has been designed, no serious difficulty arrises until a large deviation of frequency occurs if the transition section if $\lambda/4$ long. Should the transition section be $(2n + 1)\lambda/4$, and n is a large number, then the line will be descretly tunable to a number of frequencies, but not continously tunable. This can be seen by considering that the termini of the standing wave in the transition section should be $(2n + 1)\lambda/4$ apart. By introducing a large number for n, then this will not be true. A change in frequency in the transition section is the same as a change in scale of the abscissa of the sinusoidal voltage wave, leaving the absolute length of the abscissa the same as it was before the change of scale.

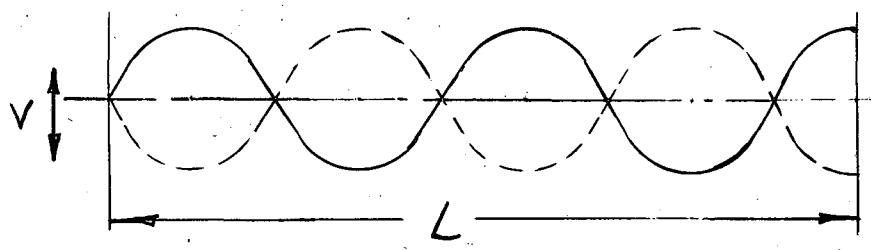

good match at this frequency

Fig. II

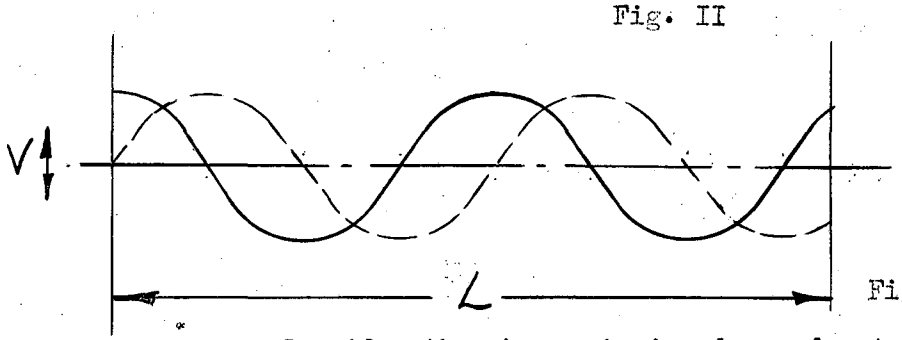

poor match, the reflected wave does not cancel the incident wave.

Fig. III

Consider the change in impedence due to insertion of members used to support the central conductor.

<u>CASE I</u>: Metalic Support.

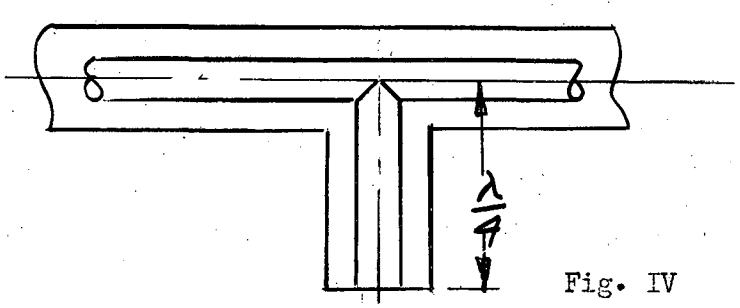

Fig. IV

If the supporting member is $\lambda/4$, then the wave induced on it is exactly canceled by the reflected wave, and the net electrical effect is that the stub does not exist.

CASE II. Insulator Support, $t/\lambda << 1$

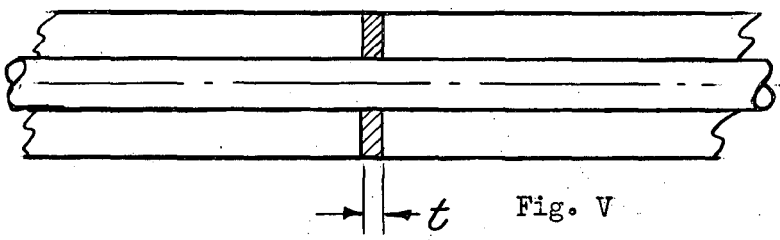

Fig. V

If the insulators are short, then the amount of reflection from the two surfaces is not out of phase by a large amount, and therefore, does not change the line impedence by an appreciable amount.

CASE III. Insulator Support, $\lambda/2 \sim t$.

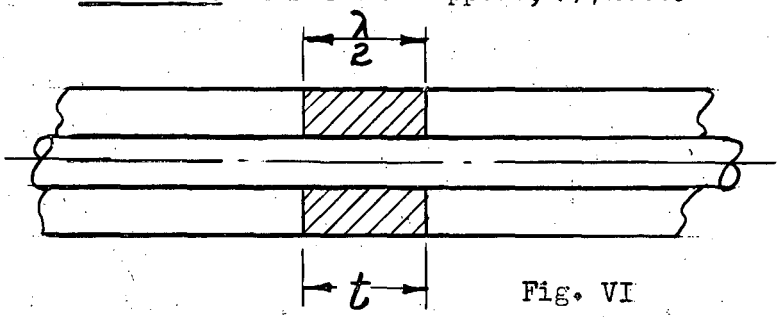

Fig. VI

If the frequency becomes high enough in the line, then the length of insulator required for Case II becomes too small due to strength or other considerations The solution to this problem is to make the insulator $\lambda/2$ long. The reflected waves from each of the faces of the insulator will exactly cancel, and again the line impedence is not changed by an appreciable amount.

CASE IV. Insulator Supported, $t/\lambda \not< 1$, $t/\lambda \neq 1/2$

Conditions may occur when it is impractical to use the very thin insulator ($t/\lambda << 1$) or the long insulator ($t/\lambda = 1/2$), but the line must be supported. The important factor to be kept in mind is to retain the impedence of the support area equal to the impedence in the unsupported regions. This can be accomplished approximately by using insulators inserted in the line such that the change in impedence in the line is equal to the change in impedence due to the insulator. If these inserted insulators are placed $\lambda/4$ apart, then any local change due to the insertion of the insulators will be almost exactly canceled out.

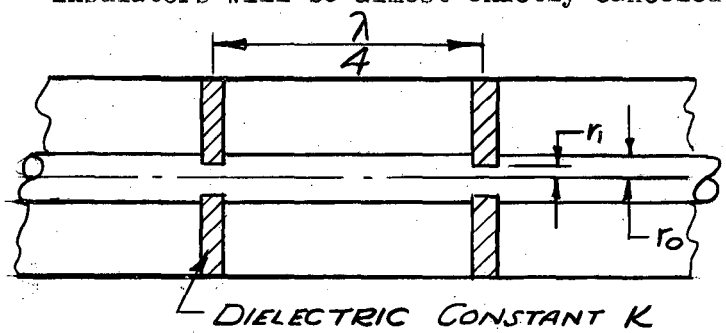

Fig. VII

Caution should be used in positioning the insulator pairs. The distances between insulator pairs should all be different and should not be an integral number of quarter wave lengths from any other insulator pairs. If this rule is not obeyed, then there may be a reinforcement of reflected waves at some particular frequency.

The amount of undercut is expressed in the equation (this applies to circular cross section, coaxial transmission lines in air.)

$$Z = \frac{138}{\sqrt{K}} \operatorname{Log}_{10} \frac{r_o}{r_i}$$

The expressions for other line configurations given in Federal Telephone and Radio Corporation, Reference Data for Radio Engineers, III, p. 322-328.

WAVE GUIDES

A wave guide may be thought of under some conditions as a parallel wire transmission line.

Consider such a line AB and CD with $\lambda/4$ stubs as shown in Figure .

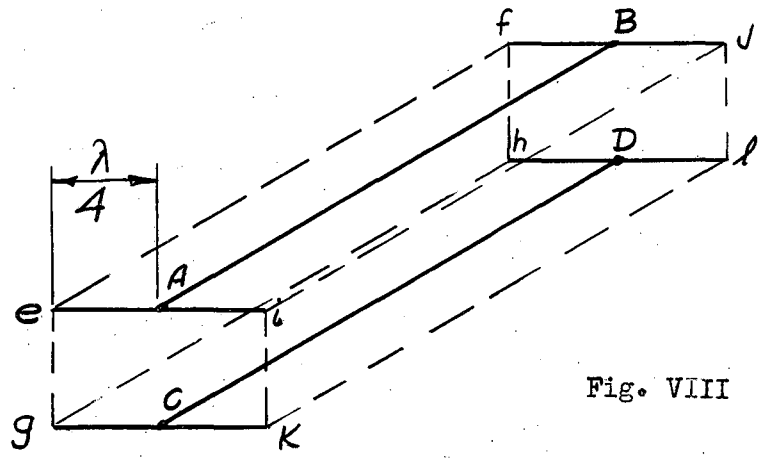

Fig. VIII

From transmission line theory, we know that the impedence of such a line is unaffected by the presence of $\lambda/4$ wave stubs Ae, Bf, Cg or Dh if e is shorted to g and f is shorted to h. By the same token, we can also add shorted quarter wave stubs Ai, Ck, etc., without changing the characteristics of the line. The limiting case of such additions then would be a tube of cross section A e g C k i, and such a tube carrying RF Power would be called a wave guide. Thus, we may define a wave guide loosly as a conducting tube, used for transmission of electromagnetic energy in the form of waves, whose cross sectional dimensions are related to the wave length of the electromagnetic waves being transmitted through it.

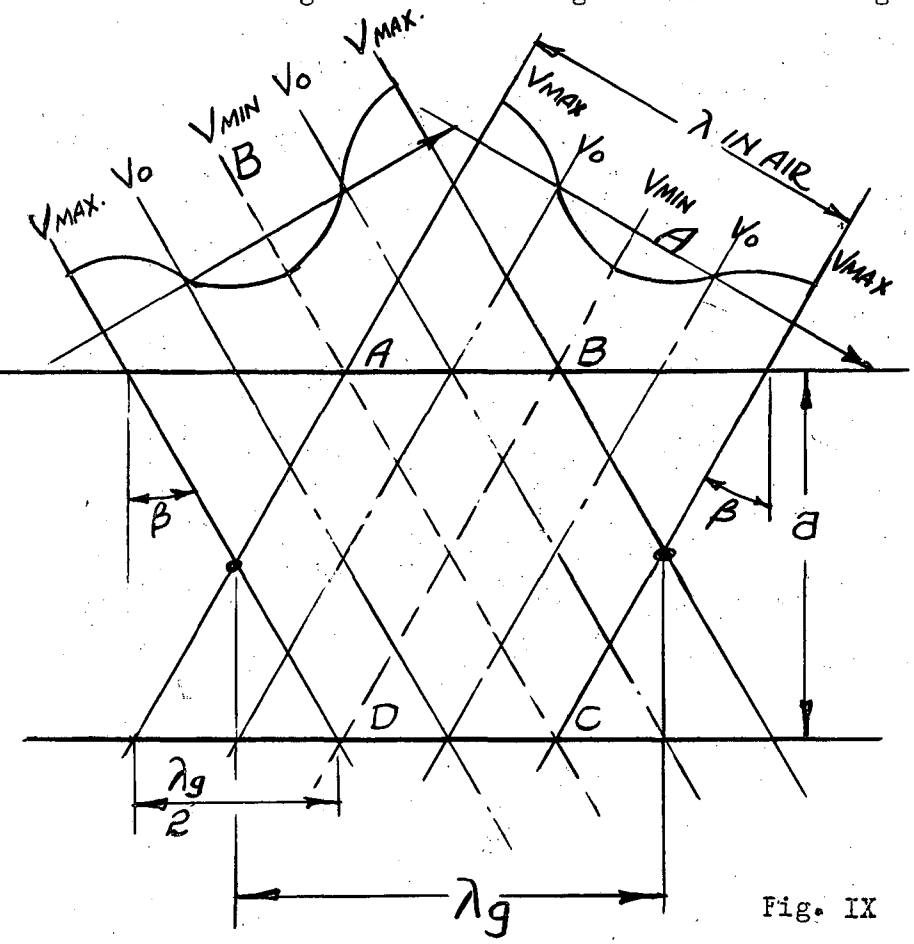

Fig. IX

Consider a portion of two electromagnetic waves A and B whose normal directions differ by an angle 2β, figure . If we assume that A and B are equal amplitude, then at points A, B, C and D the two waves cancel each other and there is no voltage at these points. Looking further we can see that the two waves will cancel all along lines drawn through A and B and through D and C. This being the case, a metal plate may be put in for lines AB and CD without changing the character of the waves except that now wave B is now just a reflection of another portion of wave A. This then gives us a two dimensional picture of an electromagnetic wave travelling down a wave guide. Referring again to Figure , we see that the resultant of the reflected waves is a new wave whose wave length is λg or the distance between positive peaks, and is known as wave length in the guide. The relationship λ, λg and a is given as follows:

$$\frac{\lambda}{g} = \cos.\beta = \frac{a}{\sqrt{a^2 + \left(\frac{\lambda g}{2}\right)^2}} \qquad (1)$$

$$\left(\frac{\lambda_g}{\lambda}\right)^2 = 1 + \left(\frac{\lambda g}{2a}\right)^2$$

$$\lambda g^2 \left[\left(\frac{1}{\lambda}\right)^2 - \left(\frac{1}{2a}\right)^2\right] = 1$$

$$\lambda g = \frac{\lambda}{\sqrt{1 = \left(\frac{\lambda}{2a}\right)^2}} \qquad (2)$$

If f = frequency
λ = wave length
C = velocity of light

Then where

$$f\lambda = C, \; f\lambda g = C' > C$$

or

$$\lambda g > \lambda \text{ or } \frac{C'}{C} = \frac{\lambda g}{\lambda}$$

C' is called phase velocity and is the velocity with which any given phase relationship between reflections is moving down the guide. It does not mean that energy is being transferred at a velocity greater than the velocity of light however. The rate at which energy is transferred down the guide is given by:

$$V_g = C \frac{\lambda}{\lambda g} \qquad (3)$$

and is always less than the velocity of light. From Figure we can see that if λ is increased without any change in **A**, then λg is increased and β approaches 90° until $\lambda = 2a$ at which time $\lambda g = \infty$ and thus $V g = 0$. This is called the wave length for cut off because the component waves are now bouncing back and forth across the guide with no component down the guide and the energy flow down the guide is cut off. The fact that in order to have $V g > 0$, the wave guide must have sectional dimensions approximating λ limits its use to very high frequencies if the guide is to be of practical proportions.

APPENDIX TO LECTURE XV

Numerical Example
For Solution of Losses in a Matched Cozxial Transmission Line

- - - - - - -

Assume no losses in the outer conductor

SYMBOLS and UNITS

R = Resistance of the inner conductor, ohms
ρ = Resistivity of the conductor material; ohm centimeters
δ = Skin depth, cm.
f = frequency of transmitted wave, cps.
P = Power loss, watts
I = Curcuit, amps.
r_1 = radius of inner conductor
X = Length of conductor

$$R = \frac{\rho}{2\pi r_i \delta} \tag{1}$$

$$I^2 Z_o = P = I^2 \frac{\rho}{2\pi r_i \delta}; \quad I^2 = \frac{P}{Z} \tag{2}$$

$$\frac{\partial P}{\partial x} = -\frac{P_o}{Z} \frac{\rho}{2\pi r_i \delta} \tag{3}$$

$$P = P_o e - \frac{\rho x}{2\pi r_i \delta Z} \tag{4}$$

$$x = \frac{2\pi Z_o r_i \delta}{\rho} \text{ for } P = \frac{1}{e} P_o$$

$$\text{Log}_e \frac{P}{P_o} = \frac{2\pi Z_o r_i \delta Z}{\rho x}; \quad 10 \text{ Log}_{10} \frac{P_o}{P} \; 4.343 \frac{\rho x}{2\pi Z_o r_i \delta} = \text{attenuation of}$$

1 db.

$$\delta_{cu} = \frac{6.6}{\sqrt{f}} \text{ cm}; \quad \rho_{cu} = 1.7 \times 10^{-6} \Omega\text{cm. at } 20^\circ \text{ C.}$$

Let $Z_o = 50\Omega$
$r_i = 0.5$ cm. $\cong$ 1/4 diameter

ATTENUATION PER CENTIMETER

$$\frac{db}{cm} = 4.343 \frac{\rho x}{2\pi Z_o r_i \delta} = \frac{(4.343)(1.7 \times 10^{-8}) \cdot X}{(2\pi)\quad(3.3)} \sqrt{f}$$

$$\frac{db}{cm} = (7.12 \times 10^{-9}) \; X \sqrt{f}$$

APPENDIX TO LECTURE XV

- - - - - - -

ATTENUATION FOR 100 FT. OF LINE

$$\frac{db}{100\ ft.} = (7.12 \times 10^{-9})(3 \times 10^{3})\sqrt{f}$$

$$\frac{db}{100\ ft.} = 2.2 \times 10^{-5}\sqrt{f}$$

at 10^6 cps,

$$\frac{db}{100\ ft.} = 2.2 \times 10^{-5} \times 10^{-3} = 2.2 \times 10^{2} = 0.022\frac{db}{100\ ft.}$$

at 3×10^9 cps,

$$\frac{db}{100\ ft.} = 2.2 \times 10^{-5} \times 5.5 \times 10^{4} = 1.2\frac{db}{100\ ft.} = 10 \log_{10}\frac{P_o}{P}$$

$$\frac{P_o}{P} = 1.32$$