Title
High Voltage Pulsar For 184-inch Cyclotron Electric Deflector

Author
Kerns, Q.A.

Publication Date
2010-05-05

UNIVERSITY OF CALIFORNIA

Radiation Laboratory

BERKELEY, CALIFORNIA

Special Review of
Declassified Reports

Authorized by USDOE JK Bratton

Unclassified TWX P182206Z May 79

REPORT PROPERLY DECLASSIFIED

[redacted] ...tive Classifier

AUG 15 1979
Date

UNIVERSITY OF CALIFORNIA
RADIATION LABORATORY

Cover Sheet
Do not remove

INDEX NO. UCRL-95
This document contains 13 pages
and 5 plates of figures.
This is copy 83 of 98. Series A

DECLASSIFIED

[redacted]

Issued to: Info. Div.

RESTRICTED

CLASSIFICATION ~~[illegible] BY AUTHORITY~~
Classification
OF THE DISTRICT ENGINEER
BY THE DECLASSIFICATION COMMITTEE

CLASSIFICATION CANCELLED
BY AUT
BRANCH
By
SIGNATURE OF THE
PERSON MAKING THE
CHANGE

Each person who received this document must sign the cover sheet in the space below.

Declassified
7-23-48

Route to	Noted by	Date	Route to	Noted by	Date

UCRL-95

Physics-Instrumentation

Radiation Laboratory
University of California
Berkeley, California

Contract No. W-7405-eng-48

HIGH VOLTAGE PULSER FOR 184-INCH CYCLOTRON ELECTRIC DEFLECTOR

by

Q. A. Kerns, W. R. Baker, R. F. Edwards, and G. M. Farly

Special Review of Declassified Reports
Authorized by USDOE JK Bratton
Unclassified TWX P182206Z May 79

REPORT PROPERLY DECLASSIFIED

Auth [redacted] fier 8-15-79
Date

[redacted] By [redacted] 8-20-79
Date

April 24, 1948

Standard Distribution	Copy Nos.
Argonne National Laboratory	1-8
Armed Forces Special Weapons Project	9
Atomic Energy Commission, Washington	10-11
Battelle Memorial Institute	12
Brookhaven National Laboratory	13-18
Carbide & Carbon Chemicals Corp. (K-25 Area)	19-22
Carbide & Carbon Chemicals Corp. (Y-12 Area)	23-26
Columbia University (Dunning)	27
Columbia University (Failla)	28
General Electric Company	29-32
Hanford Directed Operations	33-39
Iowa State College	40
Kellex Corporation	41-42
Los Alamos	43-45
Massachusetts Institute of Technology	46
Monsanto Chemical Company, Dayton	47-48
National Bureau of Standards	49-50
Naval Radiation Laboratory	51
NEPA	52
New York Directed Operations	53-54
Oak Ridge National Laboratory	55-62
Patent Advisor, Washington	63
Technical Information Division, ORDO	64-78
UCLA Medical Research Laboratory (Warren)	79
University of California Radiation Laboratory	80-84
University of Rochester	85-86
Western Reserve University (Friedell)	87
Declassification Procedure	88-97
Chemistry Department	98
Total	98

Information Division
Radiation Laboratory
University of California
Berkeley, California

ABSTRACT

HIGH VOLTAGE PULSER FOR 184-INCH CYCLOTRON ELECTRIC DEFLECTOR

Q. A. Korns, W. R. Baker, R. F. Edwards, and G. M. Farly

Radiation Laboratory, Dept. of Physics
University of California, Berkeley, California

April 24, 1948

This paper describes a high voltage pulse generator developed to deflect the beam of the 184-inch cyclotron at Berkeley, California. The apparatus develops a deflecting potential of 200 kilovolts that rises from 10 percent to 90 percent of peak value in 0.1 microseconds. The unit employs two similar 100 kilovolt water cooled pulse transformers connected symmetrically about ground to the electric deflector bars. Water-cooled General Electric pulse capacitors are discharged through the two turn primary windings of the pulse transformers by triggering a battery of 16 paralleled Kuthe 5C22 hydrogen thyratrons.

Output voltages are developed across the 17 turn secondary winding of the pulse transformer. The transformer is mounted in an oil filled lucite case that provides both insulation and compact design.

To be published at a later date.

Contract No. W-7405-eng-48

High Voltage Pulser for 184-Inch Cyclotron Electric Deflector

Q. A. Korns, W. R. Baker, R. F. Edwards, and G. M. Farly

Radiation Laboratory, Dept. of Physics
University of California, Berkeley, California

April 24, 1948

General.

As is well known, charged particles can be made to rotate in synchronism with a radio frequency field that satisfies the cyclotron resonance conditions.[1] In the frequency modulated cyclotron low energy particles are caught into synchronous orbits in the center of the cyclotron and caused to gain energy as the frequency is lowered at a moderate rate[2]. In the 184-inch cyclotron, the starting frequency for deuterons is approximately 12.5 MC and the frequency corresponding to 200 Mev is approximately 9.8 MC. Thus each downward frequency swing will cause a burst of ions to spiral out to a large radius. In the case of the 184-inch cyclotron, this radius is 81 3/4 inches as can be seen in Fig. 1.

Deflection or removal of the ions from their circular orbits at the radius and frequency corresponding to a maximum energy of 200 Mev is accomplished with a pulsed electrostatic unit in conjunction with a magnetic channel or "trough"[3]. Referring again to Fig. 1, the high voltage pulse on the electrostatic deflector applies a radial field that deflects any ions between the deflector bars towards the center of the cyclotron, shifting their center of rotation enough to allow them to pass through the lowered magnetic field in the channel or "trough" provided

---

[1] Theory of the Synchro-Cyclotron. D. Bohm and F. F. Foldy. Phy. Rev. 72, 649 (1947)

[2] Ibid.

[3] Electromagnetic Deflector for the Beam of the 184-inch Cyclotron. Powell, Henrich, Kerns, Sewell, and Thornton. BP-138 (To be published).

by the electromagnetic deflector, and consequently, to assume a large enough radius of curvature to pass out of the cyclotron magnetic field. In this manner a significant portion of the circulating beam of deuterons can be brought out of the cyclotron for study.

Pulse Timing, Shape and Magnitude

An ideal deflector pulse would be timed with respect to two conditions.

(1) The instantaneous frequency (approximately 10 MC) corresponding to the radial position of the ions at maximum energy.

(2) The phase of the dee rf voltage or angular position of the group of ions with respect to the deflector bars.

Since the increase in radius of the burst of ions per rf cycle is approximately 0.1 inches and the deflector bars are spaced one inch apart, the pulse must occur within ± 5 rf cycles of the exact frequency on the descending half of the fm cycle when the ions are at the mean radius of the deflector bars. Since the frequency modulation rate is only 100 cycles per second, this condition is rather easily satisfied.

The second condition requires the pulse to start at a time fixed by the phase of the 10 MC rf dee voltage. It is not necessary to fulfill this condition except as a refinement since the probability of a steep voltage rise occuring when the ions are not between the deflector bars is relatively great because of the geometrical proportions of the deflector and of the particle orbit.

From the foregoing it is apparent that the pulse rise time from 10 percent to 90 percent of full voltage must be of the order of 0.1 µs. The pulse decay time is to be short compared with the fm rate of 100 cycles per second.

The electric field between the deflector bars necessary to shift the particle center of rotation enough to allow it to pass through the magnetic channel is about 75,000 volts per centimeter or approximately 200,000 volts for deflector bars spaced one inch apart.

At the present time all the above requirements have been met except for phasing the pulse with the 10 MC rf dee voltage. This unit is expected to be installed in the near future, but adequate operation has been obtained since October, 1947, with a pulse timed only with the instantaneous frequency. The remainder of this report will describe the high voltage pulse generator. A description of the timing circuits is expected to appear in a later article.

Voltage Polarity on the Deflector Bars.

Referring again to Fig. 1, it will be seen that the electrostatic deflector consists of four bars, two of which form the positive electrode and two the negative. Past experience with high d.c. voltages in a vacuum in the presence of strong magnetic fields indicated breakdown from the positive electrode to ground was likely to occur. However, when tried, pulse voltages of either polarity caused no breakdown of the type experienced with d.c. Consequently a plus-minus center tap grounded system was adopted. This greatly simplified the insulation problem and, with existing deflector capacities, (see Fig. 1) reduced the energy required to obtain a given voltage gradient by approximately 25 percent.

General Description of the Pulser.

After several months of preliminary experimentation[4], major effort was directed toward the development of pulse transformers, pulse capacitors and gaseous discharge tubes. Experiments with pulsed cables and spark gap type pulse generators were discontinued.

A schematic diagram of the pulser now in use appears in Fig. 2. The circuit action is such that the capacitor bank is first charged through the resonant charging choke and diode and then is discharged into the primary of the pulse transformer by firing the 16 Kuthe 5C22 hydrogen thyratrons.

---

[4] Pulsed Deflector for 184-Inch Frequency Modulated Cyclotron, by George Farly. MDDC-1032

Pulse Transformer.

To each transformer the deflector appears as a 600 μμf capacity that must be charged up to 100,000 volts in 0.1 μs through the transformer leakage inductance. Thus, it is desirable that the deflector capacity and the transformer leakage reactance (referred to the secondary) resonate at approximately 2.5 MC. The leakgage inductance of each transformer, referred to the secondary, at 2.5 MC is then 7 μh. It must be remembered that this figure includes the entire primary circuit inductance, referred to the secondary, when the components are assembled, and not the transformer alone.

The primary voltage of the transformer is determined by the switching device used, in this case the Kuthe 5C22 hydrogen thyratrons. When working into a load whose impedance is equivalent to that of a 1 to 5 ohm transmission line these thyratrons will not operate at plate voltages above 11,000 volts. The peak secondary voltage is about 50 percent greater than the primary voltage times the turns ratio. (Some resonant rise is obtained from energy exchange between the transformer leakage reactance and the load capacity).

Requirements for the transformer winding then are: Primary voltage 11,000 volts, secondary voltage 100,000 volts, turns ratio approximately 7 1/2 to 1, secondary peak current 500 amperes (assuming linear charging of 600 μμf in 0.1 μs), primary peak current approximately 5000 amperes, leakage reactance, referred to the secondary, much less than 7 μh.

Since the leakage inductance varies as the square of the secondary turns, the number of turns in the winding is made as small as practicable. The limiting factor in this direction is how effectively a low impedance primary can be energized. After many experiments, the winding shown in Fig. 3 was decided upon. There are two primary turns and 17 secondary turns. With the resulting high voltage per turn (approximately 6 kilovolts) flat ribbon type conductors and insulation are found necessary to provide enough insulation between turns and yet keep the total space occupied by the coil (and thereby its leakage inductance) to a minimum.

It will be noted from Fig. 3 that both the secondary conductor and the polystyrene insulation are tapered at the high voltage end of the winding. The ribbon conductor is tapered to provide a longer insulation path from the high voltage to the low voltage end of the winding while the polystyrene insulation is tapered to counteract a tendency of the coil to break down from the high voltage end of the winding to the grounded core across the boundary between the polystyrene and the insulating oil.

Two coils are connected in parallel in each transformer, thus making the total transformer leakage inductance one half that of a single coil, in this case 4 μh referred to the secondary. Because of the large capacity of the deflector load, the capacity of the transformer winding itself is relatively unimportant.

Primary connections to the coils are made through a rectangular coax type of lead that forms an effective 2 ohm transmission line, providing an approximate impedance match into the transformer coils and an effective means of transfering energy from the driving circuit. This primary lead structure can be observed at the low voltage end of the transformer shown in Fig. 4. The outer hollow rectangular part of the structure forms one primary transformer lead, while a broad strap, insulated from the outer lead by polystyrene sheet and mounted on an insulating lucite bushing, acts as the other primary lead. The transformer output polarity is reversed by changing connections to these primary leads.

To minimize eddy current losses and realize the best available permeability for 0.1 μs pulses, Westinghouse 2 mil oriented hypersil type C cores are used. Better permeability would be expected from thin permalloy tape cores but at the time of construction such cores were unobtainable. The core cross-sectional area is made as small as possible, in this case 1 1/2 by 1 1/2 inches, to keep the average turn length at a minimum, since the larger the coil diameter, the greater the leakage inductance will be. Interlaminar insulation provided on these cores is adequate for ordinary pulse transformers operating at from 100 to 200 volts per turn. However, in this transformer the voltage per turn is 6000 volts. Losses due to interlaminar eddy currents are an appreciable part of the total losses where the interlaminar insulation is inadequate. These losses are reduced by a factor of two by dividing the core into two 3/4 by 1 1/2 inch segments, thus making the voltage around each of the two segments one half of the total voltage per turn. Even with this reduced voltage arcing between laminations occurs, resulting in breakdown of the oil and formation of a fine black carbon powder over a period of time.

Approximately ninety percent of the total power input to the system is eventually dissipated in the transformer cores as heat. At rated operating levels this loss is approximately 500 watts total or 250 watts in each transformer. The cores quickly reach a temperature of 200 to 300 degrees Centigrade under these conditions, and would cause rapid deterioration of the polystyrene insulation in the coils unless preventative measures are taken. These measures take the form of thin copper water cooled jackets which surround the portion of the core on which the coils rest. Precautions are taken so that the jackets will not form a shorted turn and are adequately insulated from the cores to prevent shorting of the core laminations. In addition to the jackets, a large water cooled hood is mounted above the cores, forming a cooling system so effective that at operating levels the case is barely warm to the touch.

By making the entire case of lucite, one end of the case itself forms the high voltage bushing and the other end is used for primary connections and water leads. The case and the primary lead bushing is vacuum filled with oil that has been de-aerated by spraying it into an evacuated chamber, thereby eliminating any air bubbles in the transformer windings that would permit corona to exist during fast pulses. A transformer thus prepared survived a 300 kilovolt output test, a safety factor of three.

Switching Device.

In this circuit, the switch must pass a peak current of 5000 amperes per transformer at a voltage of at least 11,000 volts with a jitter time of less than 0.01 μs in case azimuth timing of the pulse is desired. The hydrogen thyratron was selected as the only tube commercially available that would meet these specifications. One Kuthe 5C22 Hydrogen thyratron will switch 5000 amperes for 0.1 μs but in doing so the peak current rating of the tube is exceeded by almost twenty times, resulting in hydrogen cleanup and short tube life. By increasing the number of tubes to 8 in parallel on each transformer or 16 in all and introducing a very small inductance in each plate lead to make the tubes share the load, it is possible to switch the entire 10,000 amperes. To further insure that the tubes will share the load, they are individually matched and each two tubes discharge one capacitor, as shown in Fig. 2. These tubes cannot be operated at plate voltages above 11,000 volts, even though rated at 16,000 volts, because, in operation, the plate voltage reversed in 0.3 μs causing arcing between plate and grid and tube failure at plate voltages above 11,000 volts. Kuthe Laboratories have developed hydrogen thyratrons with a much higher switching capacity. Their H-6000 type will replace eight 5C22's in this circuit but, unfortunately, the tube is subject to the same plate to grid arcing troubles as the 5C22's and the same plate voltage limitation exists.

Special firing circuits have been developed to fire the 16 paralleled 5C22 hydrogen thyratrons with a jitter time of less than 0.01 μs. Referring to Fig. 2, it will be seen that each tube is connected to the trigger source through an artificial transmission line. These lines provide a 1000 volt trigger of 20 ohms impedance for approximately 0.20 microseconds. Applying this trigger to the grids results in positive ionization of all the tubes in 0.1 ± 0.01 μs. Thus far no difficulty has been experienced in firing groups of up to 16 tubes simultaneously, provided that a low impedance trigger source is available to charge all the transmission lines in parallel.

Pulse Storage Capacitor.

A satisfactory pulse storage capacitor must meet several requirements. First, the energy storage must be large enough to charge the deflector capacity and provide for other losses in the system, in this case, 0.05 µf per transformer or 0.1 µf in all. Second, the voltage and peak current ratings must be at least 11,000 volts and 5000 amperes per transformer respectively. Third, the capacitor must withstand a complete reversal of charge in 0.3 µs 100 times a second without failure. Fourth, the internal inductance should be a small part of the total allowable leakage inductance referred to the transformer primary (total allowable inductance referred to primary is $7 \div (17/2)^2$ or approximately 0.1 µh).

All types of capacitors obtainable were tested, none proving satisfactory in all respects. The lowest failure rate was obtained with a 0.03 µf, 16,000 volt General Electric pulse discharge capacitor[5]. Eight of these units are connected in parallel, or four per transformer. They are completely immersed in cooling water to remove the heat generated in the dielectric with the rapid charge reversals. The failure rate on these units operated at 11,000 volts plate voltage has been one for every 10 to 20 hours of service. Another undesirable feature is the high internal inductance of the capacitor, in this case, approximately 0.13 µh. The effect of this inductance on the circuit performance is discussed later. General Electric is developing a special capacitor[6] to remove these two undesirable conditions.

A capacitor that proved successful was built up using 50 RG 8 U cables connected in parallel, forming a one ohm transmission line 0.1 µs long. This unit

---

[5] General Electric Oil capacitor, Cat. 26F380, 0.03 µf, 16,000 volts.

[6] General Electric has installed water cooling in a capacitor (.05 µf, 16,000 volts, Cat. 19F104) that solves the heat removal problem. They are now working on the problem of reducing the inductance below 0.13 µh.

was satisfactory electrically and needed no cooling, but was eventually replaced because of the bulkiness of the 6000 feet of RG 8 U cable.

DC Resonance Charging System.

The pulse discharge capacitors are charged with a DC resonance charging system using four 304TL tubes connected as diodes. An interesting variation from the usual DC resonance charging system is the fact that a plate voltage of 11,000 volts on the thyratrons can be maintained with a power supply voltage of 2,750 volts, a step up ratio of four to one as compared with a maximum of two to one in the usual case. The reason for the higher step up ratio is found to be in the voltage reversal of the pulse discharge capacitors each time the system is pulsed. An analysis of the system reveals that the step up ratio is dependent upon losses in the entire system, and experiments have shown this to be true. Step up ratios as high as ten to one have been observed.

Assembly and Installation.

A photograph of the entire system is shown in Fig. 5. All the components are assembled as compactly as possible because of the importance of keeping the primary circuit inductance at a minimum. The completed assembly is located with respect to the leakage field of the cyclotron so that the thyratrons are in a minimum field region and the transformer cores, while in a stronger field region, are oriented so as to be insensitive to the stray field. The assembly is enclosed in a copper lined housing to prevent broadcasting of the high voltage pulses into sensitive counting equipment nearby.

Performance Data.

No accurate measurements or analyses have been carried out on the system since the main object was to complete a working unit in a minimum of time. Some measurements were made, however, the most useful of which was the determination of the output voltage with respect to time. This curve is plotted in Fig. 6.

It will be observed that the effective rise time is about 0.15 µs, 50 percent more than that desired. The major part of the increase is felt to be due to the internal inductance of the capacitors used. Satisfactory performance has resulted even though the rise time is appreciably longer than that desired. In general it is felt that increasing the peak voltage compensates for the longer rise time of the pulse.

Conclusion.

The equipment, while meeting the present needs on the cyclotron, is not the best obtainable, and a superior system is being developed to replace it. It is hoped that the new system will also make deflection of the proton beam possible when the 184-inch cyclotron is converted for proton operation.

This Work was done under the auspices of the Atomic Energy Commission under Contract No. W-7405-eng-48.

HW/5-20-48
Information Division

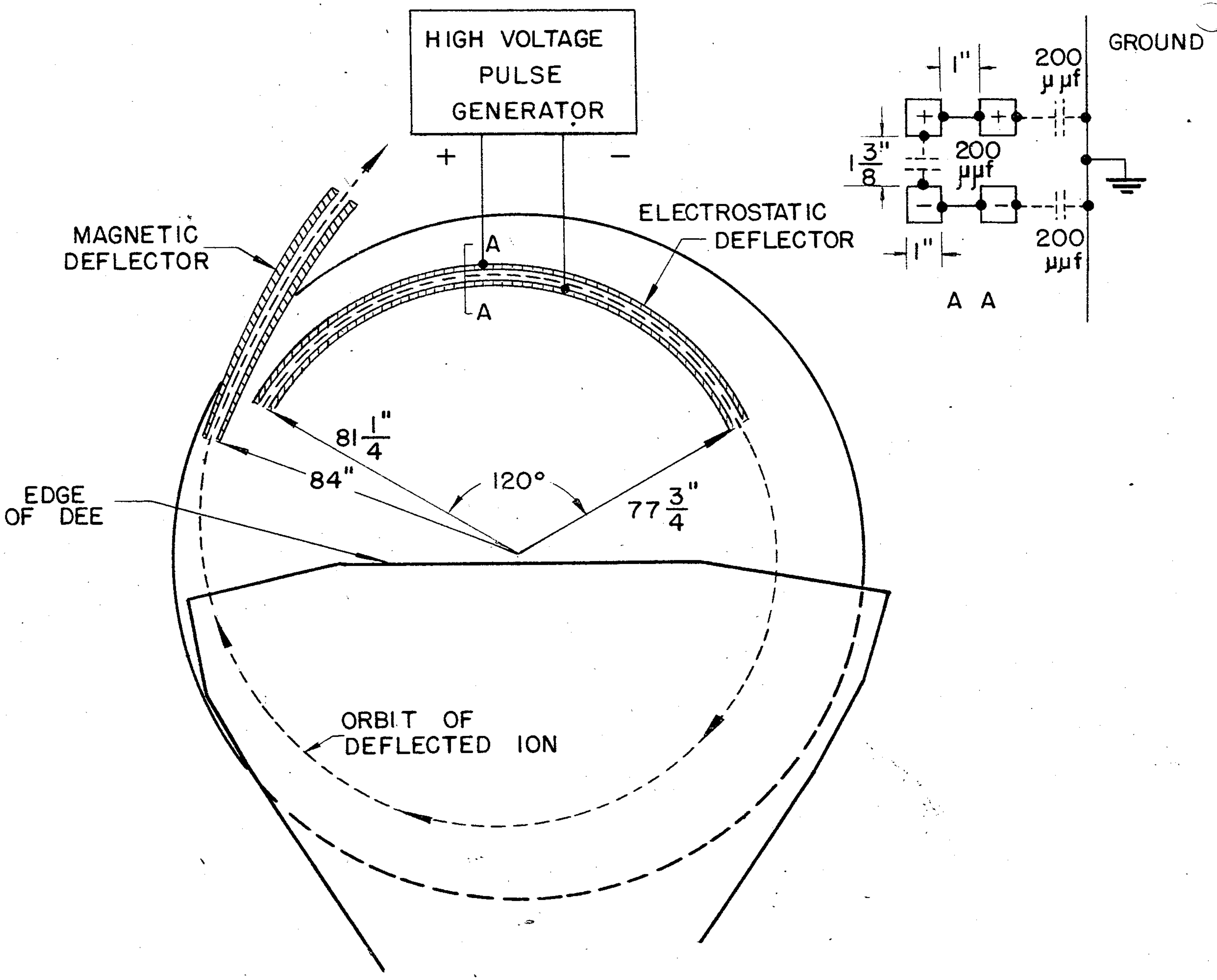

Fig. 1

Cross Section of Cyclotron Showing Deflector Components and Path of a Deflected Ion

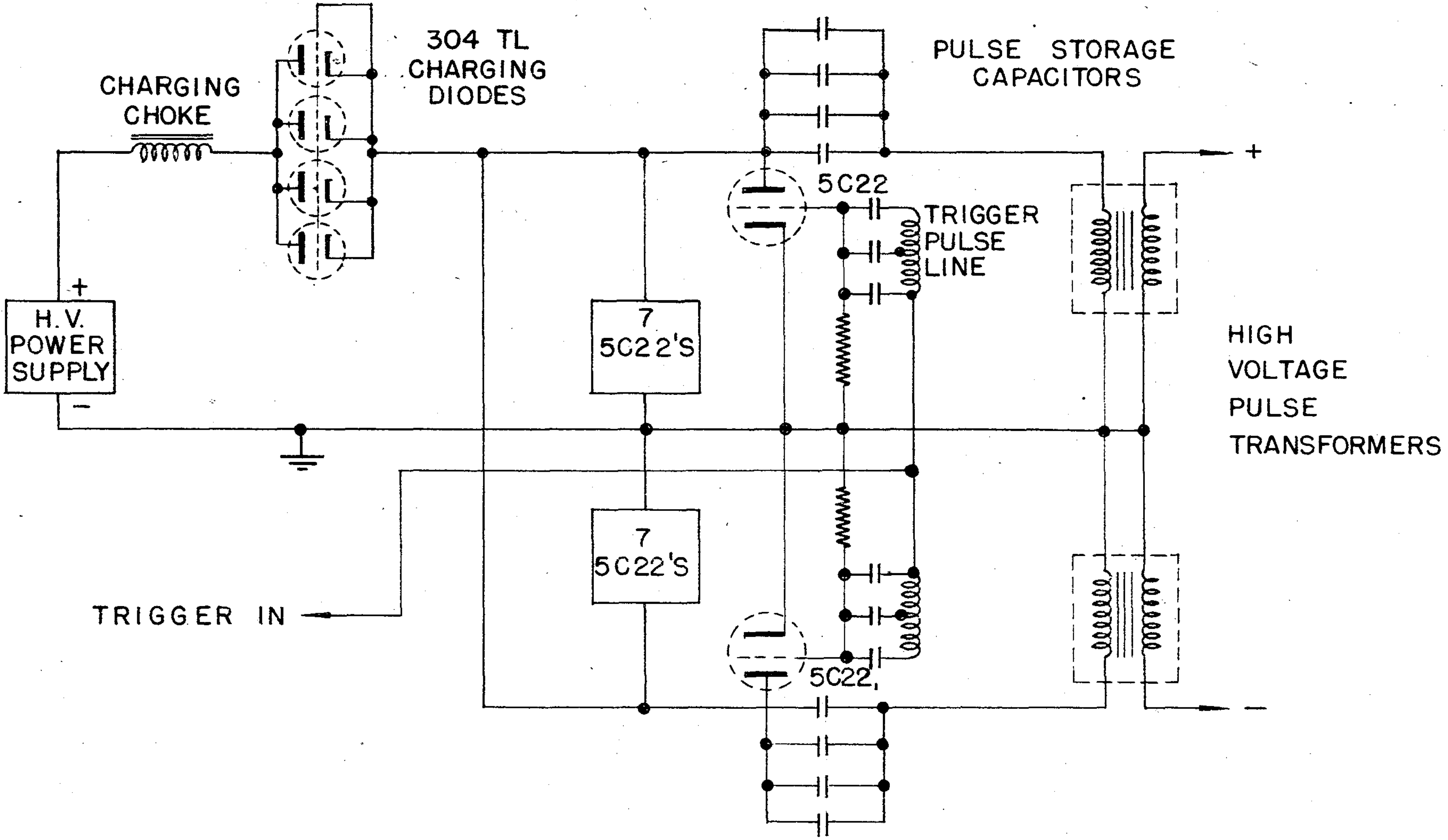

Fig. 2

Fast Pulse Generator Schematic

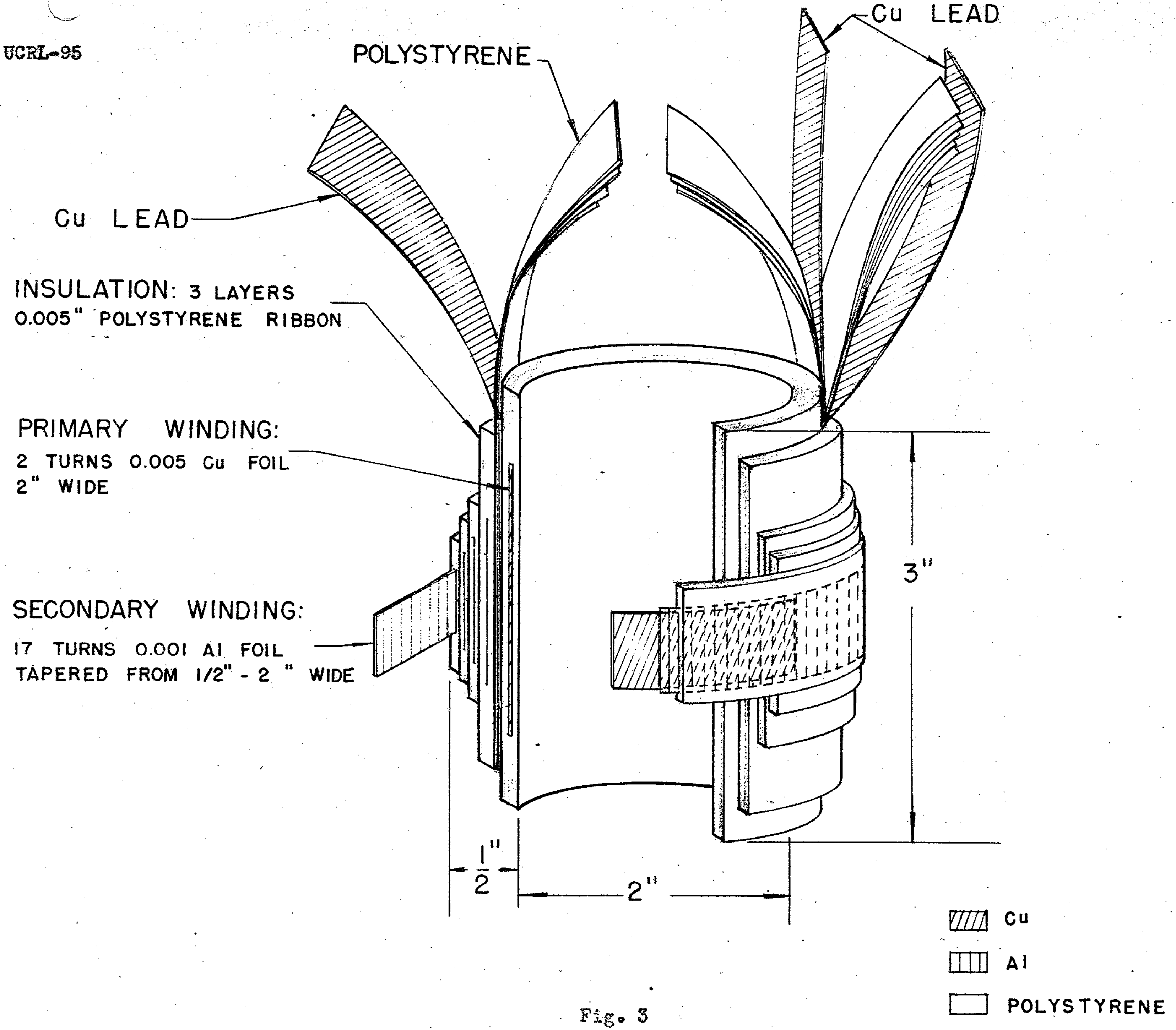

Fig. 3

Coil Developed for 0.1 µs 100 KV Pulse Transformer

184" 871

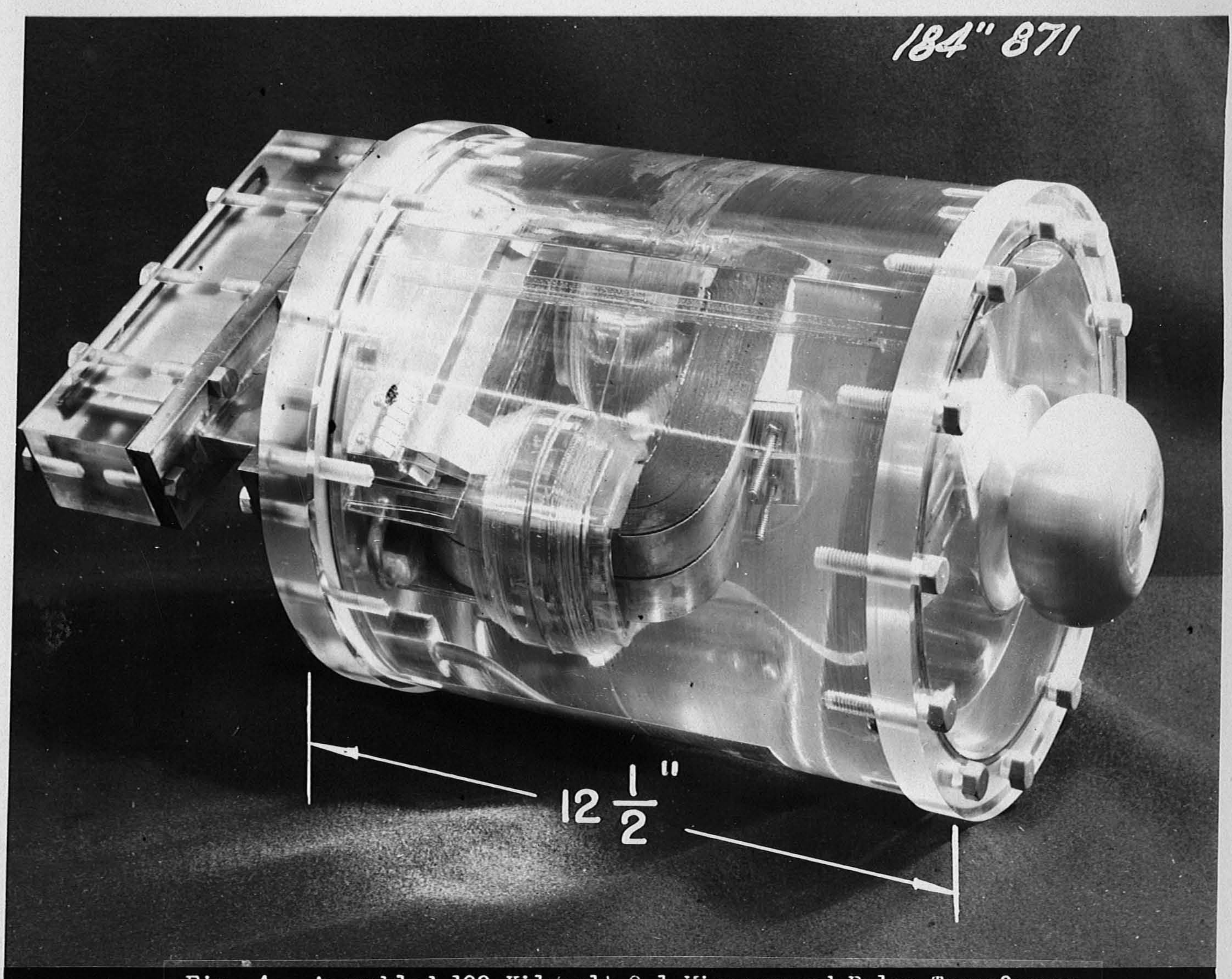

Fig. 4. Assembled 100 Kilovolt 0.1 Microsecond Pulse Transformer

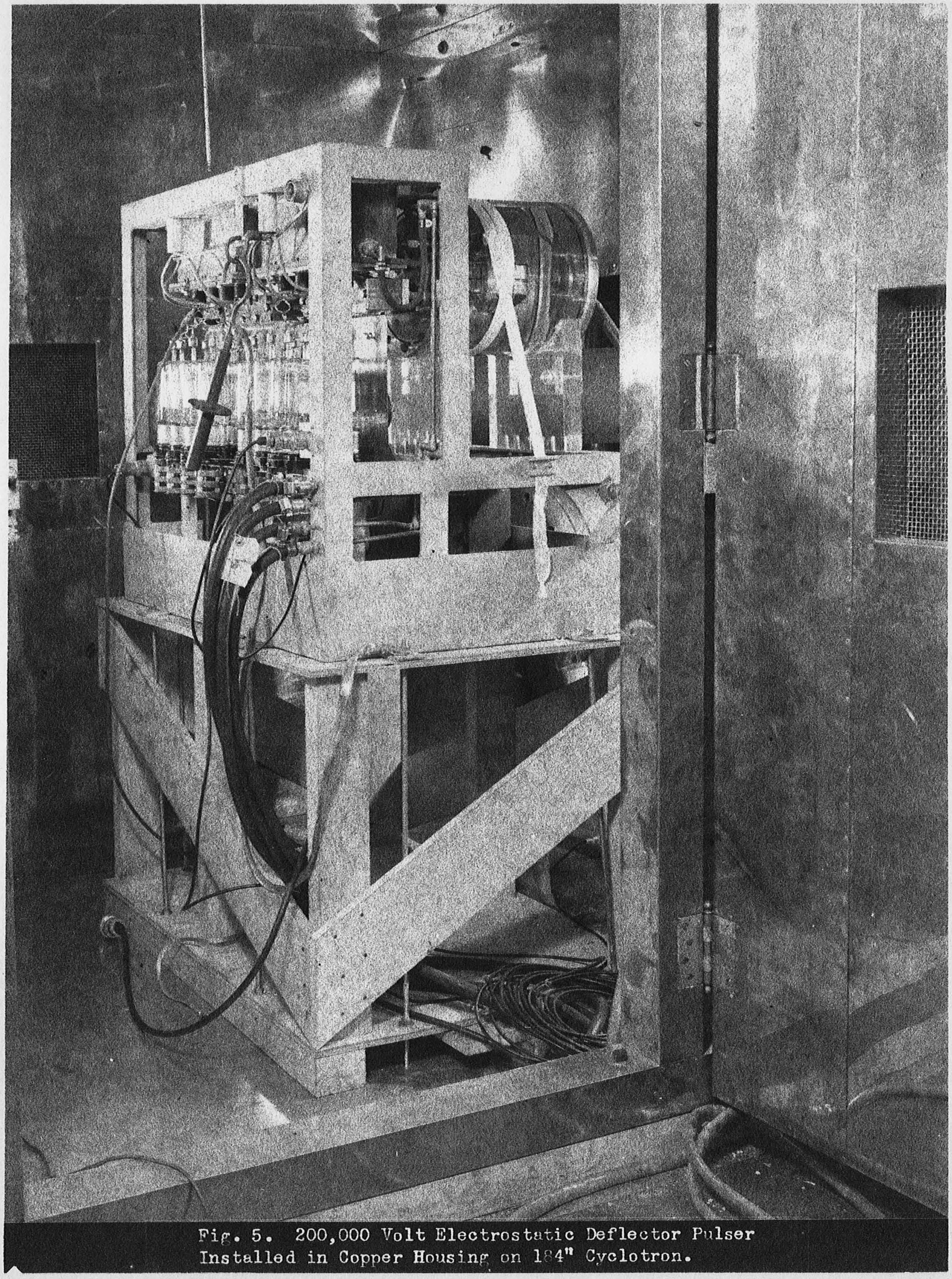

Fig. 5. 200,000 Volt Electrostatic Deflector Pulser Installed in Copper Housing on 184" Cyclotron.

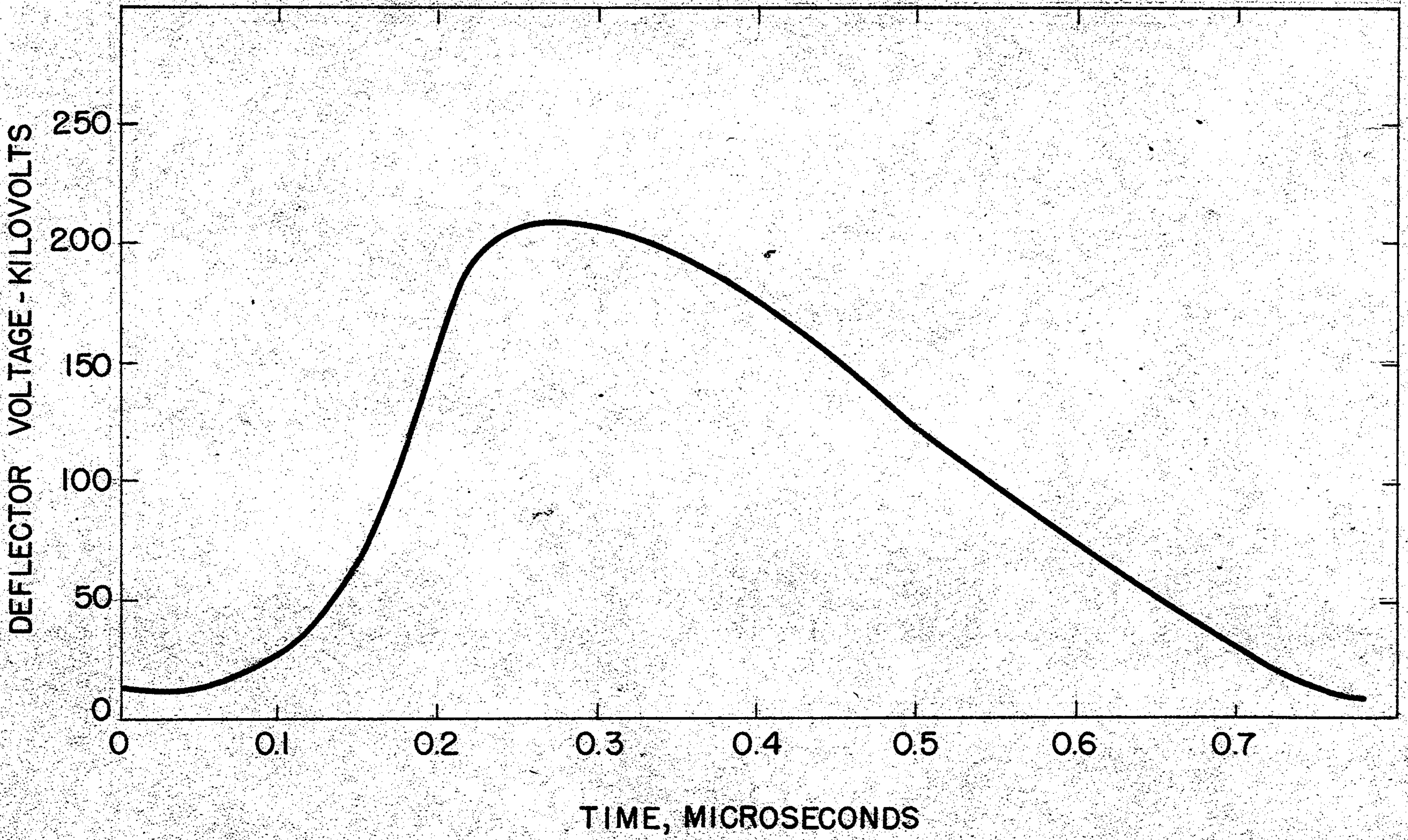

Fig. 6

Voltage Wave Shape Across Deflector Bars