Title
MAGNET CABLE MANUFACTURING

Author
Royet, J.

Publication Date
1985-07-01

LBL-20129
SSC-MAG-50

MAGNET CABLE MANUFACTURING*

John Royet

Lawrence Berkeley Laboratory
University of California
Berkeley, CA 94720

July 1985

*This work was supported by the Director, Office of Energy Research, Office of High Energy and Nuclear Physics, High Energy Physics Division, U.S. Dept. of Energy under Contract DE-AC03-76SF00098.

MAGNET CABLE MANUFACTURING

John Royet

Lawrence Berkeley Laboratory
University of California
Berkeley, CA 94720

1. Summary

The superconducting magnets used in the construction of particle accelerators are mostly built from flat, multistrand cables with rectangular or keystoned cross sections.

The superconducting strands are mostly circular but a design of a cable made of preflattened wires was proposed a few years ago under the name of Berkeley flat; such cable shows some interesting characteristics.

Another design consists of a few smaller precabled wires (e. g. 6 around 1). This configuration allows smaller filaments and a better transposition of the current elements.

The Superconducting Super Collider project involves the largest amount of superconducting cable ever envisaged for a single machine. Furthermore, the design calls for exceptional accuracy and improved characteristics of the cable. A part of the SSC research and development program is focused on these important questions.

In this paper we will emphasize the difference between the conventional cabling and wires cabling with superconducting. A new concept for the tooling will be introduced as well as the necessary characteristics of a specialized cabler.

2. Superconducting Strands

The wires used in this cable manufacturing are made of superconducting filaments of niobium-titanium embedded in an O.F.H.C. copper matrix.

2.1 Mechanical Characteristics

The superconducting material is a composite with highly anisotropic properties.

The copper matrix is an oxygen free material which can be annealed to the softest grades, however, a final annealing operation at the end of the wire production can interfere with the ultimate cold working sequence which is applied to the material in order to produce high current densities.

The niobium-titanium alloys shows high ductility and an elastic behaviour as well which are not affected by the successive heat treatments applied during manufacturing.

2.2 Twist

The composite strands are twisted around their own axis during the manufacturing process before reaching their final diameter. The purpose of this imperfect kind of transposition is to improve the electrical behaviour of the conductor in rapidly changing fields; however, for the low pulse frequencies applied in accelerator magnets, the twist period is quite long (one to four twists per inch). The optimum value of this T.P.I. is still to be determined.

2.3 Mechanical Memory

The superconducting wires show an important "memory effect". Even after an the final anneal, any further attempt to change the dimensions or the strand shape release a counter twist of varying amounts. This particular behaviour is very important and will be addressed later.

2.4 Dimensions

In order to obtain the magnetic field configuration required in the accelerator magnets, the cable dimensions must be accurate to ± 0.001" in width and ± 0.0005" in thickness. As those cables are made of several tens of wires, the accuracy of their diameter must be equal or better than 0.0001".

3. General Principles of Cabling

Making a cable is organizing several strands in a compact manner with an overall stable shape. This means that the product will come back to its original shape after any mechanical attempt to disturb it.

In order to achieve this condition, the gyration radius of each strand's cross section must be minimum (minimal inertia). This is naturally obtained with round cables made of hexagonal array of wires around a central core:

- If the wires are parallel to the cable axis, we have a compact cable, but the stability is only obtained in straight lengths and under tension.
- If the wires are cabled when their ends are not free to rotate around their own axis ("solid cabler"), the resulting cable presents an elastic torque, but each strand is not twisted with respect of its own reference system. It is twisted with respect to the cable reference system (Fig. 1A). In other words, each strand reference system rotates around the cable reference system; it is a respooling of wires around the cable's core. When we try to uncable one such wire, ends fixed, and stretch it, we observe a twist; we are changing the reference system.
- If the wires are cabled and twisted at the same time in the opposite direction with respect to the cable reference system at the ratio of one twist for one turn of the cabler's barrel, we obtain a stable cable in any position, such a cable does not show any elastic torque. When we try to uncable any one of the strands, ends fixed, we don't observe any twist because the planetary motion has already changed the reference system (Fig. 1B).
  This second process is the usual one currently applied in the cabling industry.
- With a planetary cabler and an isotropic wire, if the one to one ratio can be slightly changed this will lead to a tighter cable for a ratio over one and a looser cable for a ratio under one.

This general principle must be kept in mind because we will have to understand it when making flat superconducting cables.

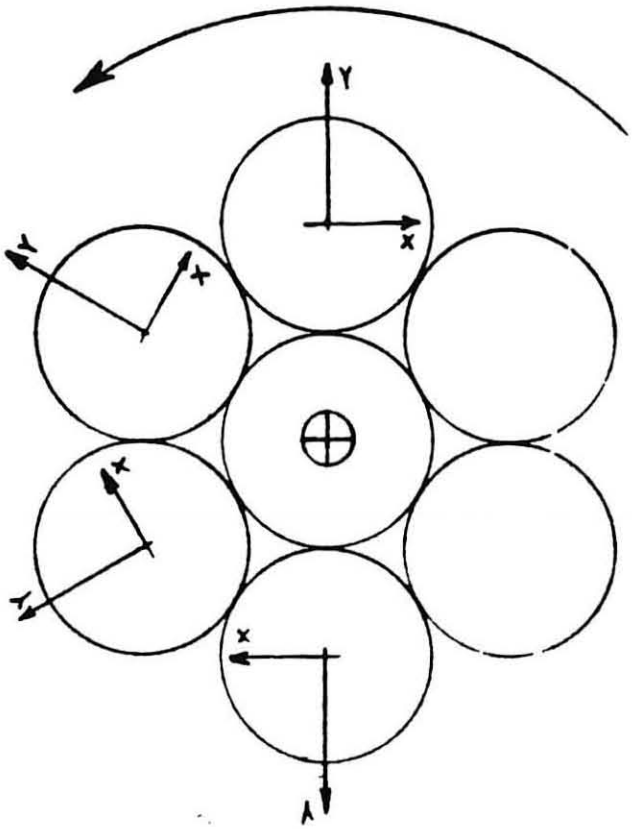

1A

SOLID CABLER

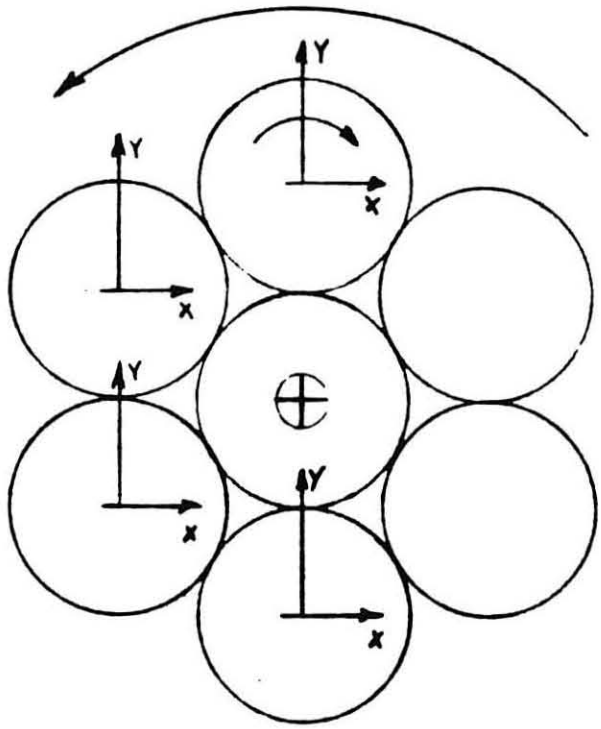

1B

PLANETARY CABLER

Fig. 1

4. Making Flat Cable from Superconducting Strands

In manufacturing flat or keystoned cables, we are obliged to disobey somewhat to the general principle described in chapter 3.

The rectangular or keystoned cross section made of two strand layers is far from the minimal inertia condition, furthermore, there is no core to support the strand's radial pressure and the prime tendency of such a cable is to collapse under the tension needed to produce the cable.

4.1 Wire Tension

This tension is generated at several locations in the strand path: (1) brake on the wire spool to avoid free wheeling, (2) brake on the wire itself to provide a constant straight path up to the mandrel tip and finally (3) pulling effort to shape the cable in the Turk's head rollers.

Cable collapse can be avoided if the flattening in the Turk's head is large enough to reshape the strands into a polygonal cross section which increases the wire to wire friction and locking effect on the cable edge. This stops the strand's radial motion toward the cable axis. However, this flattening must not cause degradation of the superconductor by filament breakage.

There are very few things we can do to reduce the cable tension; a highly polished mandrel on which the strands' spirals are preformed immediately before flattening in the Turk's head can help. A larger diameter roller will produce a lower drag. An adequate lubrication on the mandrel is compulsory, but can cause problems after the Turk's head (slippage on the capstan). Finally, we can mention the possible use of a self-propelled Turk's head; however, such a device could interfere with the complex twist pattern of the superconducting strands.

4.2 Twisting, Over and Undertwisting

Usually, during a cabling operation performed in the "solid cabler" mode, we can observe a twist pattern on the superconducting wires between the spools and the Turk's head. A common but incorrect impression is that the rotation of the cabler drum generates this twist, in fact, it is only due to the memory release phenomena already mentioned earlier.

This explains why a cable made of previously twisted strands, as is generally the case, has to be cabled in the opposite direction from the original wire twist (Fig. 2). Sometimes, the memory release effect is more important than the necessary planetary twist; we have mentioned earlier that a light overtwist gives more compact round cables. This is not true for flat or keystoned cables due to the lack of solid core on which the external strands could exert pressure. If this happens, the cable shows a general residual twist which could interfere strongly with the magnet winding operation.

This defect can be corrected by choosing the right planetary ratio; this could be confusing for some observers because, if we need to remove more than 1 twist per drum turn, the planetary twist looks to be in the wrong direction.

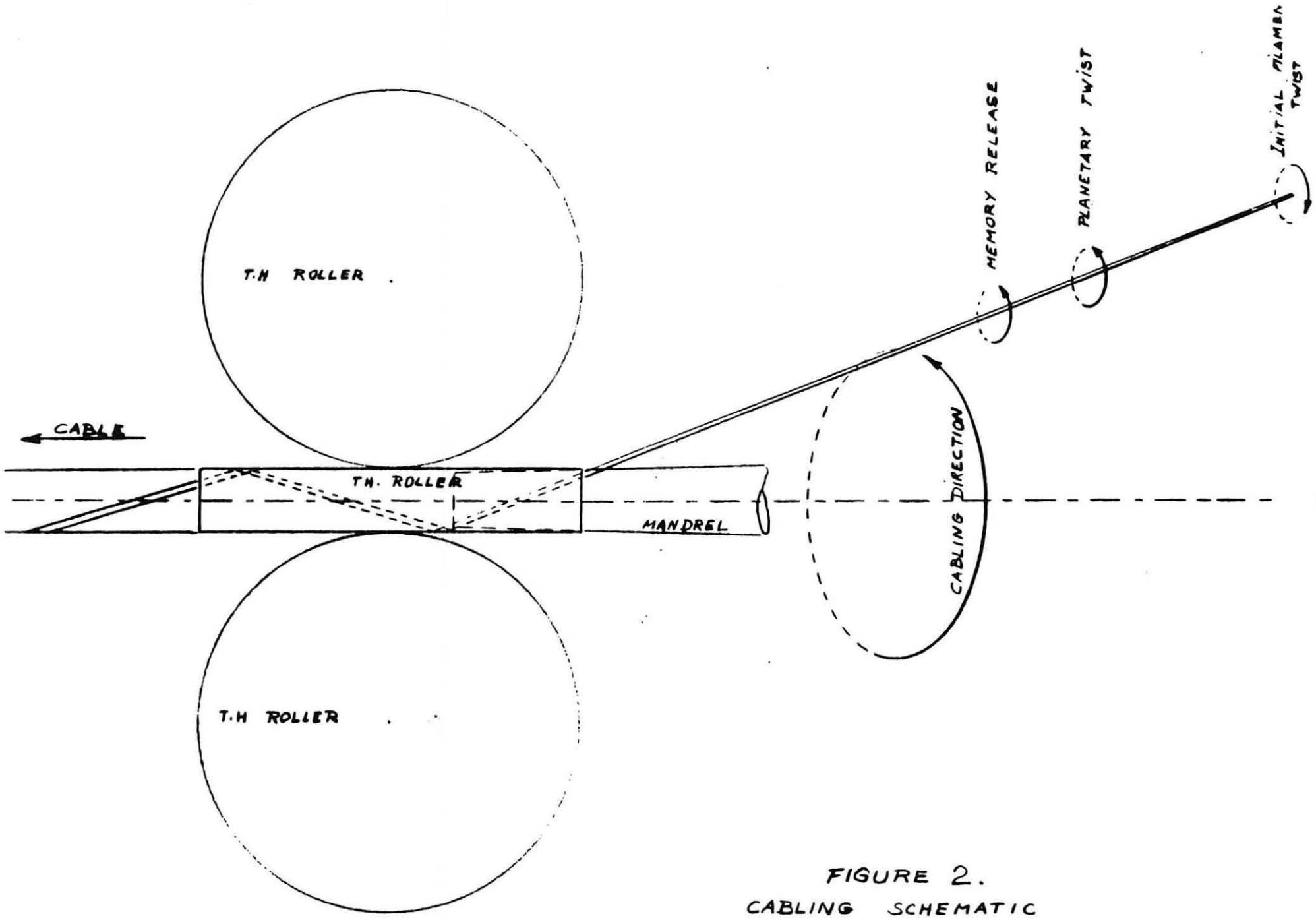

FIGURE 2.
CABLING SCHEMATIC

4.3 Stress Configuration

We now demonstrate that the torque stress configuration, natural or planetary, is periodic along the wire due to the fact that the cold work in the Turk's heading operation is mostly generated on the thinner edge of the cable. The half pitch length of wire between the interlocking points on the edges is much less cold worked and the upstream twist torque is partially kept in these segments of wire through the Turk's head. It takes several tens of feet operation to obtain a constant upstream torque and this torque is obviously more uniform for all the wires if their path is equal in length.

There are many factors involved in the determination of the optimal over or under twist:

- Number and size of the NbTi filaments
- Value of the Cu/SC ratio
- Level of annealing of the copper matrix
- Degree of compaction in the Turk's head

5. Design of a Cabling Machine

According to the principles listed in chapter 4, the design of a good cabler should obey some simple rules:

- The wire paths, from the spool to the Turk's head should be of the same length.
- A spool planetary drive with several reduction ratio should be available.
- The wire tensioners should be able to induce a constant tension for each strand from the beginning to the end of the spool.
- A mechanical transmission should connect the main rotation drive and the pulling device.
- The pulling device (capstan or caterpuller) should not allow any cable slippage.
- An accurate positioning device should give a true measure of the distance between the mandrel tip and the Turk's head center plane.

6. Mandrel or Pin Core

The mandrel is one of the forming tools for the cable: the two wire layers are contained externally by the Turk's head aperture and internally by the mandrel.

The mandrel is a transition positioning tool between the conical surface of the wire array to the straight or keystoned cross section of the cable.

The position accuracy of the mandrel is a very critical parameter in the cabling process; the strands should never have enough freedom to cross over each other.

6.1 Mandrel Design

The mathematical definition of the surface containing the strands is an hyperbolic conoid, the strands being one of the generative family.

In order to avoid additional pulling force due to friction of the strands on the mandrel, it should be:

- made of hard material
- carefully polished
- lubricated
- shaped as close as possible to an internal tangential surface to the wires generative system

Consequently, the mandrel should look like a conical blade, the edges of which are converging to the width of the Turk's head aperture and the faces converging to the center plane of the cable; the tip of the mandrel being the last tangential contact point with the strands. Due to the capstan effect, any discontinuity in the wire back tension is dangerously amplified proportionally with the friction on the mandrel.

6.2 Other Design

The constant perimeter design was proposed several years ago. The perimeter of the mandrel is calculated to be equal to the internal perimeter of the tube strands in close contact. The tip of such a mandrel is similar to the tip of the conical design, however:

- The friction of the strands is increased due to the length of the contact.
- The shape transition makes compulsory the tip's enlargement, consequently, more drag is generated.
- The core of the mandrel is small in diameter due to the size of the wires usually cabled. This produces an unwelcome flexibility of the tool.
- The short bending radius of the wires around the mandrel core leads to a permanent deformation of some sections of the strand.

6.3 Mandrel Positioning

The theoretical positions of the mechanical elements involved in the Turk's heading operation are given in Fig. 3.

H is the minimum distance between mandrel tip and Turk's head center. We can also use this formula to evaluate the maximum distance which will be obtained with a "T" value incorporating another wire OD.; this corresponds to a possible cross over accident in the cable.

In the case of a keystoned cable, we obtain two values for "S", one for the minor side and one for the major, then two values for "H". That is the way to evaluate how the mandrel tip needs to be wedged to obtain an equal guidance across the cable width.

6.4 Lubrication

The only lubrication point in the cabling process is the part of the mandrel in contact with the wires. After the Turk's head any oil is not welcome because it could interfere with the pulling device operation by introducing slippage on drums or belts.

An air wipe installation on the cable after the Turk's head is probably the best solution.

We have used successfully a solution of synthetic oil in a solvent as Freon or methylen chloride which evaporates in a short time.

Fig. 3

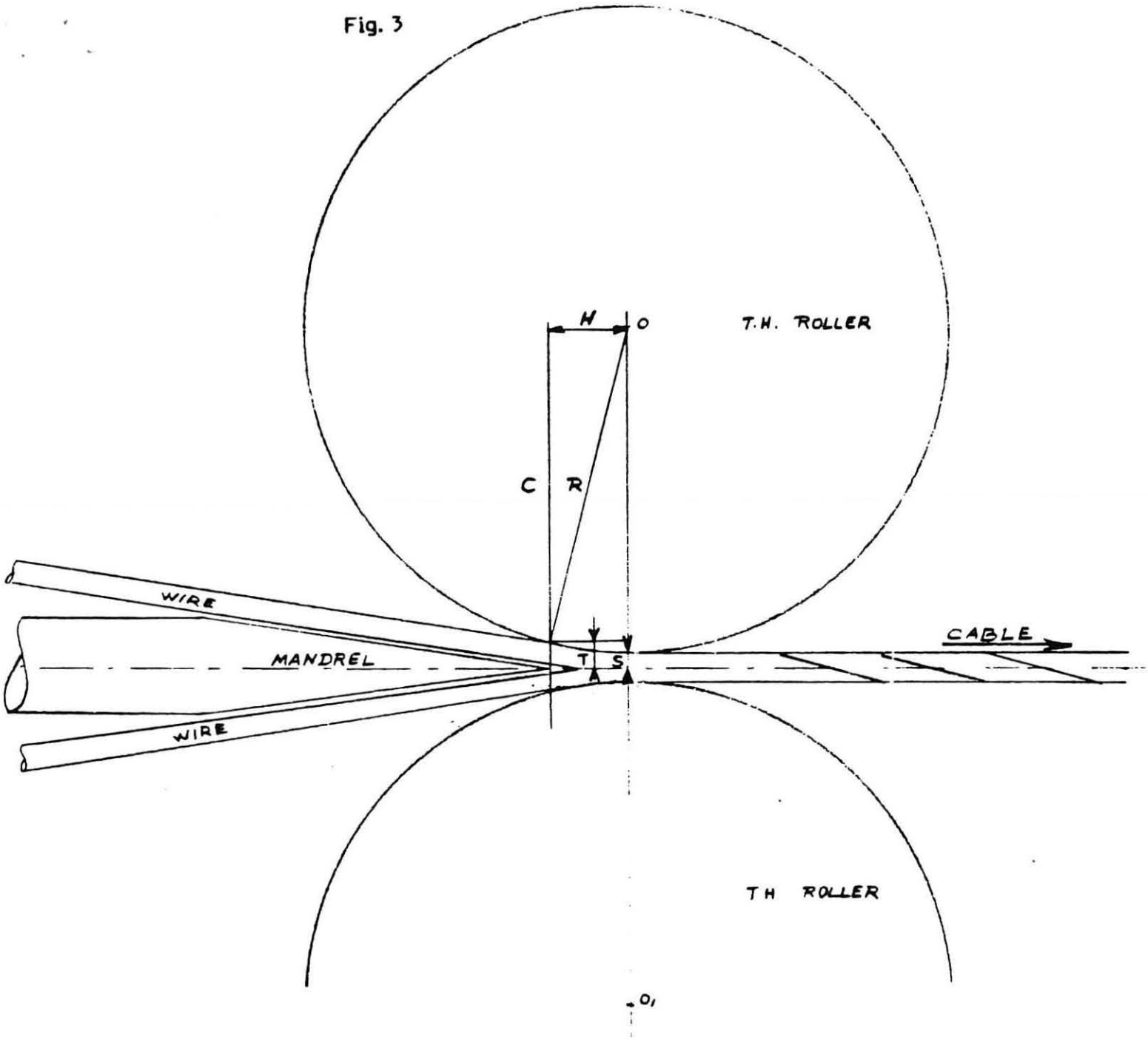

T = 1/2 mandrel tip thickness + 1 wire O.D. + play + tolerances

R = Turk's head roller radius

C = 1/2 cord at H distance from center

S = 1/2 cable thickness

$$H = \sqrt{R^2 - C^2} \qquad C = R + S - T$$

$$H - \sqrt{R^2 - (R+S-T)^2}$$

H = minimum distance between mandrel tip and Turk's head center

H —> maximum when T = 1/2 mandrel tip + 2 wires O.D. + play + tol.

↓

cross over risk

6.5 A Practical Example

We have built at LBL an experimental cabler (see Fig. 4) which incorporates all the recommendations discussed earlier. This machine was made from a large gap lathe which was equipped with a variable frequency drive.

We have already made over ten thousand feet of experimental cable which is in good agreement with the recommendations disclosed in this paper.

7. Turk's Head

The Turk's head is the sizing machine in the flat cabling process. Most of the forming performed in the industry this way is a rectangular cross section. The standard setting of the machine gives an infinity of dimensions from zero to the width of the rollers. This flexibility is the main reason to use such a device.

For the keystoned cables we need at least one roller ground to the keystone angle. Two rollers ground to the half angle is more symmetrical, four ground rollers give symmetry and wear resistance.

However, because there are lateral forces applied on two of the rollers and these forces added to the variability of the assembly can change the angle by as much as 25% for a used machine not carefully assembled. Such variations are incompatible with the accuracy needed for the cable dimensions.

Another way to use a Turk's head is to grind two rollers at the cable width and at half the keystone angle. The other two rollers are kept flat and apply a symmetrical pressure on the sides of the keystoned rollers. This design (see Fig. 5) gives a far more constant dimension of the product, however, we need a set of two rollers for each cable shape, the only flexibility being the average thickness of the cable.

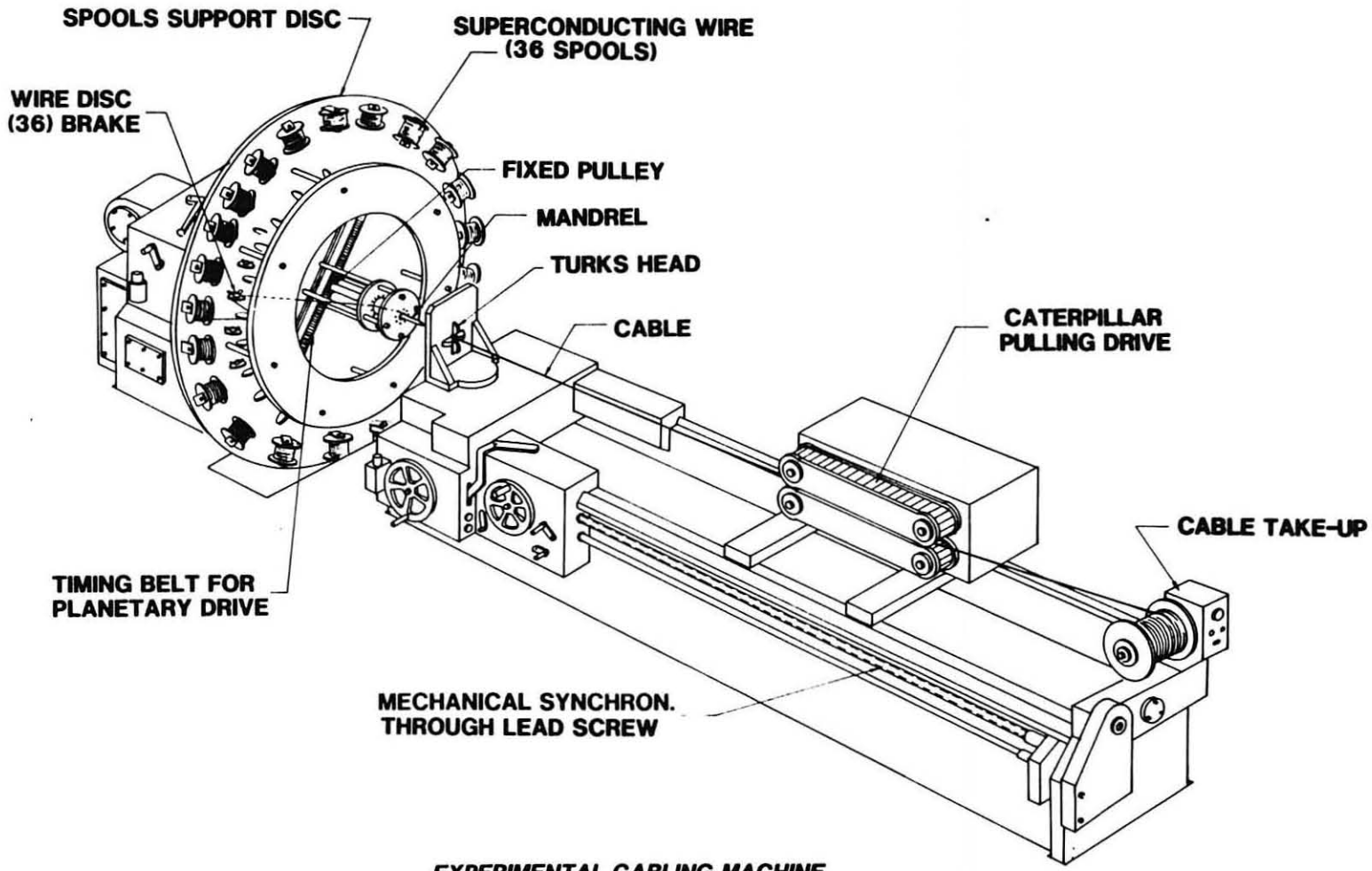

EXPERIMENTAL CABLING MACHINE

XBL 858-3292

FIG. 4 (a)

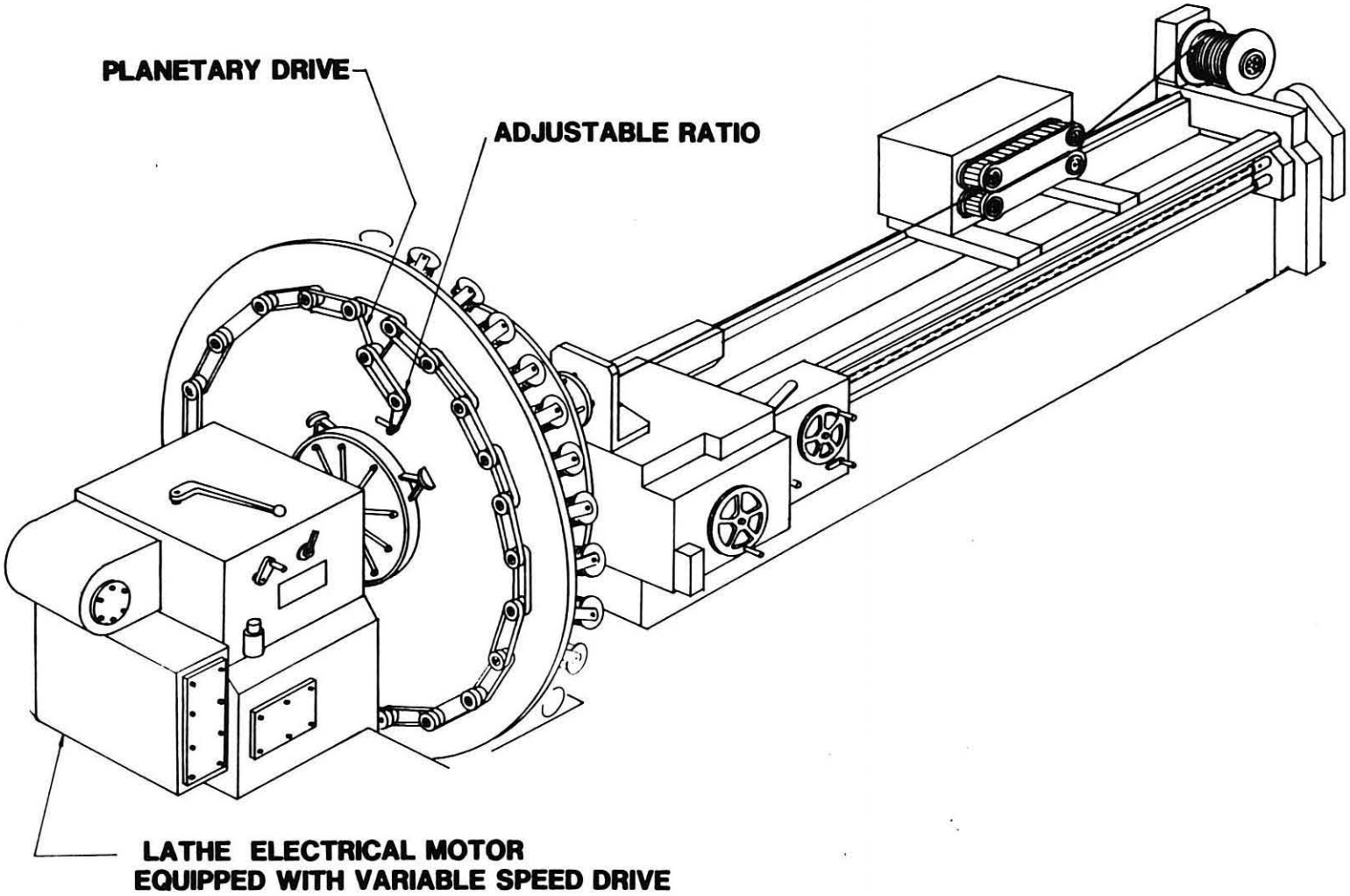

XBL 858-3291

FIG. 4 (b)

FIG. 5. Various Turkshead Settings

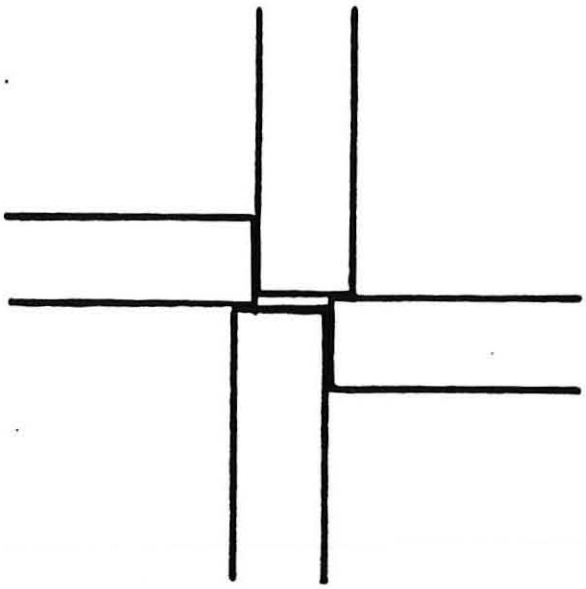

A. Setting for a rectangular cross-section

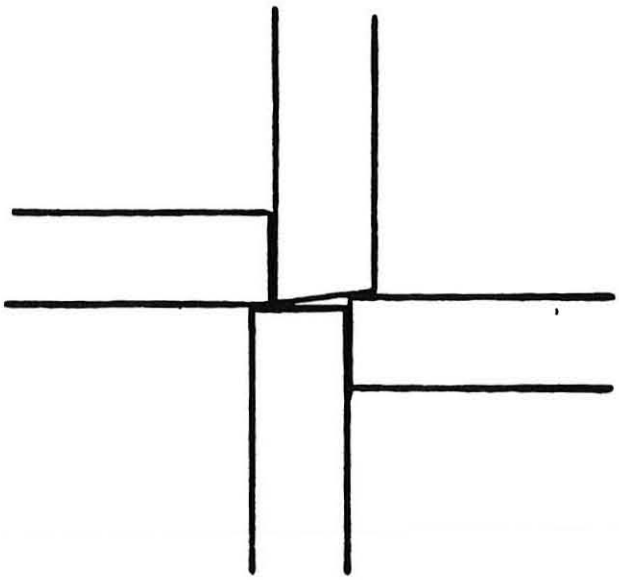

B. Setting for a Keystone cross-section - only one roller ground

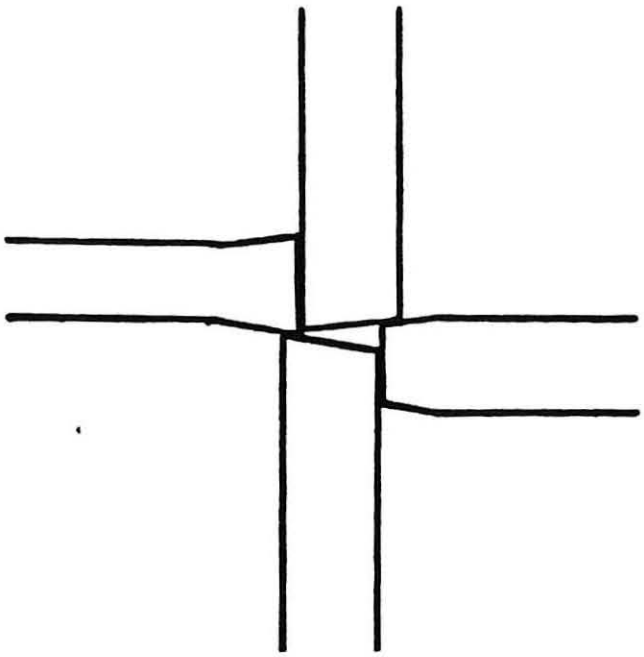

C. Setting for a Keystone cross-section - four rollers ground

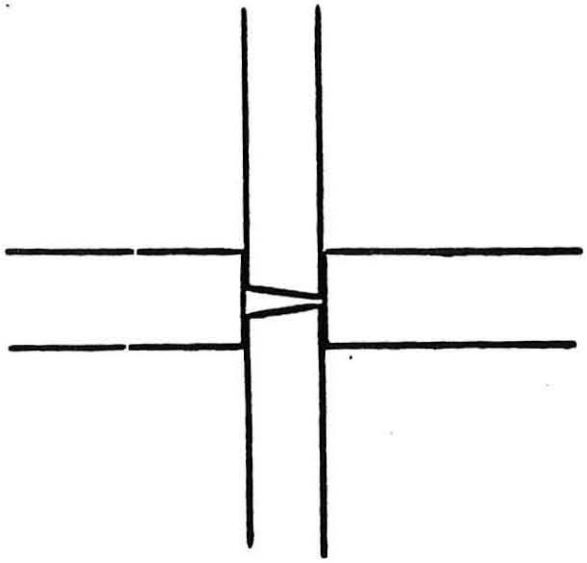

D. Symetrical setting for a Keystone cross-section - 2 rollers ground

8. Pulling Device (Capstan or Caterpillar)

Capstan and caterpillar are the main two categories of pulling devices. Both of them should be perfectly synchronized with the rotating drum of the cabler in order to obtain a constant cable pitch and avoid an accidental over or underwrap of the mandrel with wires.

The caterpillar system is self-tailing which means that a sample of the cable is available after such machine without further tension.

A capstan does not have the same possibility because it must be followed by a take-up which provides the tension needed for a no-slip operation. This is a problem for experimental manufacturing - a short sample is not so short. Another inconvenience is that it is difficult to check for the residual twist of the cable sample.

9. Cable of Cables

The use of small cables e.g., 6 around 1 wire, as sub-elements of a larger cable was already proposed several years ago. The main advantage of such a design is to obtain a more flexible cable and smaller superconducting filaments.

We have made some samples of such cables; from the cabling point of view, the main difference is that the sub-element shows a different type of memory effect, no longer initiated by the pretwisting of the elementary wires. The solid core of the sub-element absorbs the radial pressure generated at the time of the sub-element cabling.

The cabling of such a material is more difficult than the cabling of a solid wire: cable collapsing occurs for a much smaller tension of the cable; the locking effect at the cable's edge level is less efficient.

If we call dimensional ratio $\alpha = \frac{2}{n}$ with n = number of strands, the cable of cables stability disappears for values of α larger than for solid strand cables.

Estimated values for α:

solid strand cables $\alpha > \frac{1}{20}$

cable of cables $\alpha > \frac{1}{13}$

Obviously those values do not apply for flat cables with solid core.

Another weak point for cable of cables is a lower elastic modulus, mainly due to a larger void ratio. If we try to reduce this void ratio by compaction, we observe a larger degradation than for solid strand cables; however, we gain stability improvement through a better helium environment.

10. Preliminary Conclusions

The various cables manufactured with our experimental cabler show a pretty good dimensional accuracy. This accuracy results mostly from the use of the "symmetrical setting" of the Turkshead.

The cable compaction is also a very sensitive parameter for the cable quality; we need a high elasticity modulus with the lowest possible degradation. These two parameters are interfering strongly.

The cable's pitch could also be a parameter requiring adjustment because of the strands sharp bends on the cable's edges, the most suspected degradation origin; however, the cable should be able to accept short radius at the magnet ends level without collapsing. These two parameters are also interfering.

Therefore, a compromise has to be found in order to impose cable specifications leading to the best possible magnet.