Title
GRAIN BOUNDARY ENERGY

Authors
D, Kurt
Kennedy

Publication Date
1965-08-01

UCRL-16051

University of California

Ernest O. Lawrence Radiation Laboratory

GRAIN BOUNDARY ENERGY

Berkeley, California

DISCLAIMER

UCRL-16051

UNIVERSITY OF CALIFORNIA

Lawrence Radiation Laboratory
Berkeley, California

AEC Contract No. W-7405-eng-48

GRAIN BOUNDARY ENERGY

Kurt D. Kennedy

(Ph.D. Thesis)

August 1965

TABLE OF CONTENTS

GRAIN BOUNDARY ENERGY

Kurt D. Kennedy

Inorganic Materials Research Division,
Lawrence Radiation Laboratory,
Department of Mineral Technology, College of Engineering,
University of California, Berkeley, California

ABSTRACT

September 1965

The interfacial energy of [001] tilt boundaries in pure copper and copper +0.02% silver have been determined by measuring the dihedral angles formed by chemical grooving in molten salt. Boundary energies were determined for three boundary orientations and nine temperatures between 200°C and 1000°C. The temperature coefficient of boundary energy was similar to the temperature coefficient of the shear modulus. The boundary energy of copper at 300°C was reduced 30 percent by the addition of 0.02 percent silver but was unaffected at 1000°C. The reduction of grain boundary energy of the copper doped with silver was ascribed to silver atoms occupying sites at the boundary.

The presence of silver atoms at boundary sites relieved some of the elastic strain energy of the boundary. Thermodynamic and lattice parameter data predicted segregation of silver to copper grain boundaries to approximately the same extent as indicated by reduction of grain boundary energy.

I. INTRODUCTION

Grain boundaries play a very important role in plastic flow at low temperatures, in creep, in diffusion, in grain growth characteristics, and in nucleation of second phase particles from decomposing supersaturated solid solutions. To know more about the exact nature of grain boundaries is highly desirable, but there are few experimental techniques that can reveal much about them. One of the major factors that limits quantitative studies is the narrowness of the grain boundary zone, which is only a few atom distances wide.

In an early theory of grain boundary structure, Rosenhaim and Humphrey[1] suggested that metallic crystals were held together by "amorphous cement". Their hypothesis was based on the observed fact that at low temperatures deformation in many metals was intracrystalline, while at high temperatures deformation took place at the grain boundaries. It was proposed that the boundaries consisted of an "amorphous cement" that was rigid at low temperatures but which became plastic at high temperatures. This theory has long since been discarded, as has the transition lattice theory of Jeffries and Archer.[2]

Dislocation theory has created an explanation for at least one type of grain interface, i.e., low angle pure tilt or twist boundaries. J. M. Burger[3] and W. L. Bragg[4] showed that a "wall" of dislocation could form a low angle boundary. The existance and nature of such boundaries has been confirmed by transmission electron microscopy,[5] and J. H. Van der Merwe[6] showed that no other arrangement could describe low angle boundaries if the forces between atoms obeyed a sinusoidal law.

As the grain boundary angle increases, the spacing between dislocation in the boundary decreases. When the boundary angle becomes large (15-20°), the dislocations are so close together that they can hardly be regarded as distinct, and the concept of a simple tilt boundary must be modified.

II. ELASTIC ENERGY OF A BOUNDARY

The energy of a boundary based on a dislocation model has been calculated by Read and Shockley[7] as:

$$E = \frac{\tau_o b\ \Theta}{2}\ [A - \ln \Theta] \qquad (1)$$

where

b = Burgers vector

Θ = grain boundary angle

A = integration constant

$\tau_o = \frac{\mu}{2\pi(1-\sigma)}\ (1-\sigma \cos^2 \alpha)$

α = angle between b, the slip vector, and the dislocation axis

σ = Poissons ratio

μ = shear modulus

Eshelby, Read and Shockley[8] developed an expression for τ_o in a fcc crystal for a dislocation in a ⟨001⟩ direction and its Burgers vector in either a {100} or {110} plane

$$\tau_o = \frac{1}{2\pi}\left[C_{44} \cos^2\alpha + \sin^2\alpha(C_{11} + C_{12})\left(\frac{C_{44}(C_{11}-C_{12})}{C_{11}(C_{11}+C_{12}+2C_{44})}\right)^{1/2}\right] \qquad (2)$$

where C_{11}, etc., are the elastic constants of the material.

A has been evaluated by Read and Shockley[7] as:

$$A = 1 + \ln \frac{b}{2\pi r_o} \qquad (3)$$

where r_o is the radius of non-Hookean energy zone around a dislocation.

Gjostein and Rhines,[9] using the Read-Shockley equation, measured the constants $\frac{\tau_o b}{2}$ and A in copper at 1065°C by thermal grooving and

found that the experimentally determined $\frac{\tau_o b}{2}$ was in good agreement with theory while the A agreement was limited to grain boundaries of less than 6°, which corresponds to dislocation spacing of 10b. The non-Hookean energy is associated with the term A implying that the Read-Shockley model breaks down because of failure to handle closely spaced non-Hookean cores. Van der Merwe[6] assumed a sinusoidal stress-strain relation at the interface and expressed A as

$$A = 1+\ln \frac{(1-\sigma)\mu_o}{(1-2\sigma)\Pi\mu} \qquad (4)$$

where

μ = elastic shear modulus

μ_o = a constant of the same order of magnitude as μ which determines the amplitude of the sinusoidal stress-strain relation.

Using this model for the non-Hookean region of the boundary, theoretical values for A equalled experimentally determined values up to twice the angle found for the Read-Shockley model.

In the foregoing model, all the energy of a grain boundary is associated with the displacement of an atom from its normal position. When force-displacement relationship of displaced atoms is linear, the energy of a dislocation or a collection of dislocations should be a first order function of the constant relating force and displacement, i.e., the shear modulus. In the non-linear region of force-displacement, the shear modulus function is not known.

When dislocations are close together in the form of a high angle grain boundary, a large amount of energy is non-linear strain energy. The exact relation between shear modulus and the energy of a high angle grain boundary cannot be known until a rigorous model is devised.

However, there is value in knowing how high angle grain boundary energy varies with a change of modulus.

In a high angle grain boundary model proposed by A. Seeger and G. Schottky[10], most of the grain boundary energy was due to the redistribution of quasi-free electron gas resulting from the displaced positive charge of atom cores of boundary atoms. In this model the energy associated with electron redistribution should not be shear modulus sensitive.

Because the effect of a modulus change on grain boundary energy is of major importance, an attempt was made in this investigation to evaluate the role played by the shear modulus.

III. CONCENTRATION OF SOLUTE ATOMS IN BOUNDARIES

Many properties of solid solution alloys depend upon the distribution of solute atoms as well as the average composition. When solute atoms are concentrated in certain regions in a metal, their effect can be out of proportion to their average concentration. An important example of this is concentration of impurities at grain boundaries. When the nucleation of a precipitating phase occurs at a grain boundary, the effect can be easily seen metallographically, but when segregation occurs within the solid solution region at grain boundaries, the effect is almost impossible to detect and to measure.

Grain boundaries are estimated to be only a few atoms wide, i.e., about 10^{-7} cm. If 30 percent of the atomic boundary sites can be occupied by solute atoms, the grain boundary can become saturated when the average impurity level is as low as 10^{-4} atomic percent.

In order to measure directly the increased solute concentration at grain boundaries, an analytic means would have to be devised that would chemically measure a region of about 10^{-7} cm wide. At the present time the electron beam microprobe offers the best analytic tool for small areas and the smallest resolvable spot that it can analyze is about 10^{-4} cm.

An indirect method of chemical analysis of grain boundaries has been attempted with radioactive tracers.[11] In this experiment lead with a small concentration of polonium was annealed at a temperature that would permit the polonium to diffuse to the grain boundaries. Polonium is an alpha emitter with a very short range making it possible for the polonium at the grain boundary to form an autoradiograph of the boundary when a piece of photographic film is pressed against the surface. The validity

of this early work has been questioned, however, because subsequent experiments have indicated that only surface migration of polonium occurred during annealing, and if the sample was polished after annealing the boundaries could not be detected autoradiographically.

Even less direct evidence of grain boundary segregation is evidenced by metallographic effects. The most frequently observed manifestation is the "ridge and trough" surface topography produced by chemical etching of boundaries at room temperature. This effect is sometimes observed after a metal has been annealed at an appropriate time and temperature to permit diffusion to grain boundaries to occur. However, when a metal showing this effect is quenched from a temperature near the melting point, no such behavior is observed.

The other alternative to the detection of grain boundary segregation, namely depletion of the bulk crystal by the diffusion of solute to the grain boundary, presents almost as many problems.

The first requirement is that the solute concentration in the bulk before segregation must be low enough so that the saturation of the grain boundary makes a significant change in the solute concentration in the interior of the crystal. This requirement puts the solute concentration in the range of 0.001%, too low for analytic techniques capable of measuring just the interior of the crystal.

In a ten micron grain diameter material, the number of grain boundary sites would be in the order of magnitude of 0.01 percent of the number of bulk crystal atoms. If a solute could be found that had a solubility limit in a metal of about 0.01 percent, then such an alloy would have extra solute sites in the fine grain condition over the coarse grain condition. If these grain boundary sites could be saturated

by permitting the solute to diffuse to the boundaries at low temperature then the fine grain alloy should have a higher solubility limit than the coarse grained alloy.

Few systems fulfill the requirements necessary for such an experiment. Temperatures low enough to limit solute solubility correspondingly lower the diffusion rate to a value that would require many years for establishment of equilibrium. One exception is a system of interstitial solutes such as carbon in α-iron. The solubility of carbon in α-iron is given by Wert[12] at $12.0\ e^{-9700/RT}$ or 7.2×10^{-4} atomic percent at 170°C. In addition the diffusion rate at this temperature is high enough so that 50 percent of equilibrium can be achieved in 10,000 seconds. However, no increase of the solubility of carbon in fine grained annealed iron has not been observed to date.

Cold-worked metal can behave similarly to grain boundaries in the way solute atoms can concentrate at sites where they can relieve strain energy. Dislocations create such extra sites for atoms whose solubility is limited by size difference.

L. S. Darken[13] showed that the amount of nitrogen that could be dissolved in mild steel could be increased 50 percent by cold-work. There appeared to be two types of sites. One type lowered the free energy of nitrogen atoms over normal interstitial position by 9,500 calories; the other type lowered the nitrogen free energy by 16,000 calories. The number of low energy sites closely follows the number of dislocations as determined by electron microscopy. The number of high energy sites was about 10 percent of the low energy sites and their identity has not been determined.

The difficulty of making direct chemical analyses of grain boundaries stimulates one to attempt to measure a property of grain boundaries which

is sensitive to segregation and more easily evaluated. The driving force of a solute atom to migrate to the grain boundary is the reduction of strain energy of a boundary when a solute atom is present. If the strain energy associated with a grain boundary can be measured with and without segregation, the difference should provide quantitative evidence for segregation.

At grain boundaries, misaligned planes of atoms must meet and create regions of both longer and shorter interatomic distances. All grain boundary models have this feature in common. These regions of compression or tension make an environment of lower energy for solute atoms that differ in size from the matrix. If the distortion energy of the solute atom at the grain boundary sites is small, most of the distortion energy associated with the foreign atom when it is in the interior of the crystal is eliminated by segregating to the boundary. This energy has been estimated by Pine[14] to be

$$Q = \frac{24\Pi KGr^3}{2K + 4G} \quad \frac{(r_1 - r_o)^2}{r_1} \qquad (5)$$

where K = bulk modulus of the solute atom

G = shear modulus of matrix

r = radius of hole occupied by the solute atom

r_1 = radius of isolated solute atom

r_o = radius of the unoccupied hole

Assuming that "n" distorted sites exist in the region of the grain boundary and that "p" solute atoms with energy "e" can be distributed among them, and that N, P, E have equivalent meanings for the undistorted crystal, then the free energy due to solute atoms is[15]

$$F = pe + PE - kT\,\{\ell n(n!\ N!) - \ell n(n-p)!\ p!\ (N-P)!\ P!\}$$

A minimum of F occurs when

$$e-E = kT\ \ell n\left(\frac{n-p}{P} \times \frac{P}{N-P}\right) \tag{6}$$

$$\frac{P}{n-p} = \frac{P}{N-P}\ \exp\left(\frac{E-e}{kT}\right) \tag{7}$$

C_b, the equilibrium concentration at the boundary $= \frac{p}{n}$

C, the concentration in the bulk $= \frac{P}{N}$

Q, the driving force = (E-e)

$$C_b = \frac{C\epsilon^{Q/RT}}{1-C+C\epsilon^{Q/RT}} \tag{8}$$

when $C \ll 1$, $C_b = \dfrac{C\epsilon^{Q/RT}}{1+C\epsilon^{Q/RT}}$ (9)

The driving force, Q, cannot be evaluated from Eq. (5) because r, r_1, and r_o are not known.

Equation (5) can be tested qualitatively by permitting solute atoms to saturate the grain boundary and to measure the strain energy. If the elastic strain is reduced by the presence of solute atoms in the boundary, then the grain boundary energy which results from it will also be reduced. The problem is then to measure the grain boundary energy at a low enough temperature so that segregation will occur.

The usual way to measure grain boundary energy is to heat a bicrystal near its melting point until an equilibrium is established between the surface tension and the grain boundary tension.[16] This creates a groove where the grain boundary meets the surface. The dihedral angle of the root of the groove is related to the surface tension and the grain boundary energy. This method requires that surface atoms at the boundary diffuse

to the surfaces of the adjacent crystals. Surface diffusion is very slow below 80 percent of the melting point, T_m, and it is possible that the temperature must be below 50 percent of the melting point before significant segregation to grain boundaries can occur. A means of reversibly removing boundary atoms and depositing them at nonboundary sites at a temperature of less than 0.5 T_m must therefore be used for making segregation measurements.

IV. EXPERIMENTAL

Extending the techniques of grain boundary grooving to low temperature requires a mechanism for moving atoms at low temperatures. If a liquid is used to transport atoms, the high atomic mobility of the liquid could make the removal of the grain boundary atoms very fast.

The simplest solvent for a metal is a liquid metal. The requirements for a grain boundary grooving experiment with a liquid metal solvent are:

1. The solid metal should have some solubility in the liquid, but the liquid metal should have very little solubility in the solid.
2. The two metals do not react to form stable compounds.
3. If grain boundary segregation is to be studied, then the metal solvent must be liquid below 0.5 T_m of the solid metal.

Very few metal systems fulfill these requirements. The necessary difference in melting point generally occurs with metal pairs having different valences, and this tends to lead to compound formation.

Two metals that are satisfactory were aluminum and gallium. Gallium at 100°C can be made to wet aluminum with the use of ultrasonics. However, instead of grooving the aluminum, the gallium penetrates into the grain boundaries, splitting the grains apart in a manner similar to the way mercury attacks brass.

An alternate to transporting grain boundary atoms as neutral metal atoms in a metal solvent, is moving them as ions in a polar solvent. A metal in contact with a solution of its ions will be in equilibrium with those ions. The balance between atoms dissolving at surface and ions precipitating at the surface will be controlled by the requirement

of charge neutrality rather than the solubility product, as in the case of a metal in equilibrium with neutral atoms.

The first attempt at grain boundary grooving by ion exchange was with copper in contact with a one mole water solution of CuCl. Special care had to be taken to exclude oxygen because in air the cuprous ion is rapidly oxidized to the cupric ion, which will etch copper in a non-equilibrium manner. One week under non-oxidizing conditions produced barely detectable grain boundary grooves, and the use of aqueous solutions was abandoned in favor of fused salt solvents. A mixture of 50 percent $ZnCl_2$-25 percent KCl-25 percent CuCl was found to have a melting point of 180°C and a boiling point in excess of 1000°C. Hence it was suitable for use over a large temperature range. Oxygen had to be excluded from this system also to prevent etching.

Grain boundary grooving occurs only when the movement of boundary atoms is to adjacent surfaces. Other transport processes can occur and may mask the grooving. When temperature gradients exist in the salt, metal can then be dissolved in the hotter region and precipitate in the cooler region. Also, areas of the metal that are imperfect because of cold work will go into solution and precipitate on the more perfect areas.

Creating isothermal conditions at high temperature requires that convective heat losses be kept to a minimum by good insulation. Also, surrounding the hot zone with material of good thermal conductivity helps suppress thermal gradients.

Preparing a stress-free flat metal surface suitable for grain boundary grooving involves mechanical polishing to create flatness, then electrolytic polishing to remove the strained material introduced

by mechanical polishing. However even the most uniform electrolytic polishing will degrade flatness and a compromise between flatness and distorted metal must be made. If the grain boundary grooving is to be done at high temperatures, surface stress will be relieved and little or no electrolytic polishing will be necessary. For low temperature grooving surface stress can be a serious problem and must be removed even at the expense of flatness.

Bicrystals* from 99.98 percent copper were grown from goniometer oriented seed[17] crystals in a horizontal graphite mold. The furnace consisted of a McDaniel tube filled with purified argon with a traveling Kanthal heating element on the outside. The orientation between the two grains composing the bicrystal were checked by Laue diffraction patterns. The crystals were cast in plastic and cut off in lengths of about 7-mm. The plastic was then removed. The samples were square bars about 25-mm long with a 7×7-mm cross section. The grain boundary generally crossed the bar near the center and was normal to the axis of the sample. The surface to be used for observations was polished with paper through 600 mesh, and the work hardened material was removed by electropolishing in a Disa Electropol apparatus under the following conditions:

Electrolite:	25% H_3PO_4	Voltage: 10 volts
	25% C_2H_5OH	Current Density: 1 Amp/cm^2
	50% H_2O	Time: 2 minutes

---

*The author would like to thank Norman Gjostein for furnishing the bicrystals used in this study.

The sample was x-rayed again to insure the surface region at the boundary as being stress free.

The grain boundary grooving was performed in a sealed 12-mm quartz tube. Special care had to be taken to avoid any contact between the fused salt and the highly polished copper surface until after all the materials capable of etching copper had been removed. The principle agent present in the salt mixture that would attack copper is cupric ion. However, other reactive impurities could be present. To remove all such impurities the salt mixture was heated to 1000°C in the quartz tube with an atmosphere of helium and with copper turnings in the bottom. The highly stressed polycrystalline turnings rapidly reduced the cupric ion by the reaction $Cu + Cu^{++} \rightarrow 2Cu^{+}$ and also reacted with any other potential etchants. The molten salt was cooled and a copper bicrystal was placed in the quartz tube without the introduction of any air into the system. The quartz tube was sealed and turned over so that the bicrystal and the salt were at the bottom and the copper turning remained at the top of the tube. The quartz tube containing the bicrystal was then placed in the furnace.

The furnace as shown in Fig. 1 was designed to make all the heat losses from the center low and uniformly conductive and thus eliminate gradients. The sample was placed in one of the 1/2" holes drilled in a 3"×18" cylinder of Inconel, which served as a heat sink. Semicircular nichrome heating elements with a total power of 3000 watts were clamped directly on the Inconel heat sink. The temperature was controlled by a Leeds and Northrup Model H recorder controller which had a full scale sensitivity of 2 millivolts. The set point was always midscale and the temperature was adjusted by varying the zero suppression. The controller switched between two powerstats set about 10 percent apart. Normally the

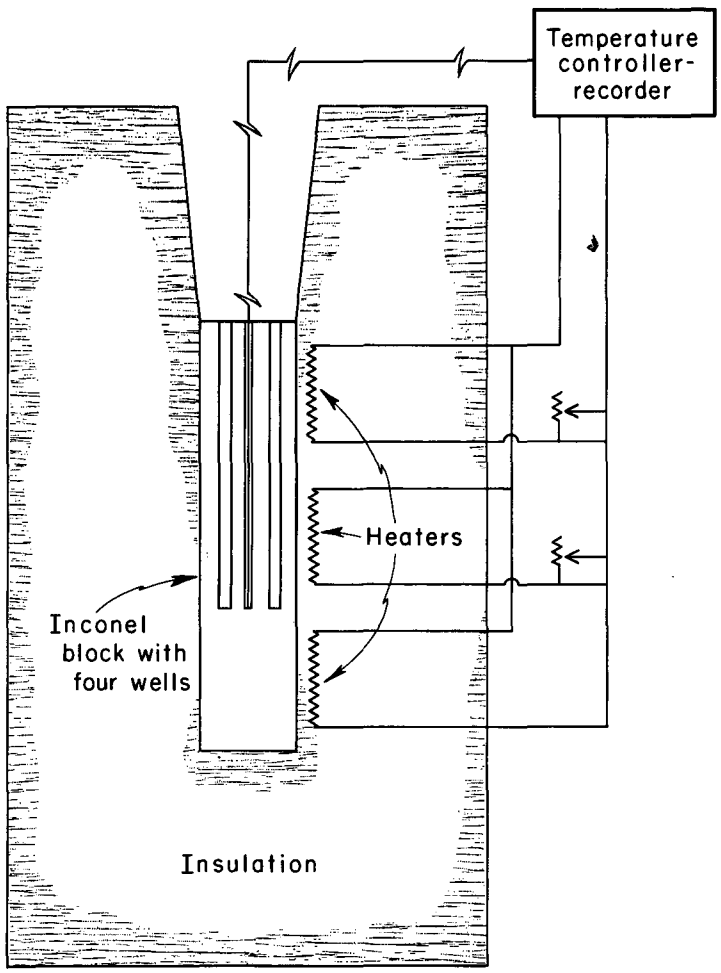

MU-36114

Fig. 1

furnace would control to about 100 μv, or about 1°C, with a chromel-alumel thermocouple. The thermal gradient in the region of the sample was about 0.05°C/cm.

The sample in the bottom of the sealed quartz tube was placed in one of the wells of the furnace and left at temperature for times varying from one hour at 1000°C to 50 hours at 200°C. Then the sample tube was removed from the furnace, cooled, and the tube was broken to remove the sample. The sample was then rinsed in hot water to remove any salt and dried. The dihedral angle formed by thermal grooving was measured by a Zeiss Interference Microscope using a Linnik optical system.[26] A sketch of the set-up is shown in Fig. 2 and the relationship between dihedral angle and angle made by fringes is given by

$$\text{Tan}\ \alpha = \frac{\lambda/2}{L}\ \text{Tan}\ \Phi \qquad (10)$$

α is the angle between the normal and one side of the groove,

L is the spacing between fringes,

λ is the wavelength of light (green thallium line 0.534 μ),

Φ is the angle made between the boundary and a fringe.

These angular relationships are shown in Fig. 3.

It has been experimentally shown[18] that the contour interval for interference microscopes using convergent illumination is approximately 10 percent greater than $\lambda/2$. This results from the obliquity of rays emerging from the microscope objective. All the results have been corrected for this error.

Photographs were taken with 35-mm film at a magnification of 76; the negative was enlarged 18 times when printed, thus giving an overall magnification of 1582. The measurements were made on the enlargements

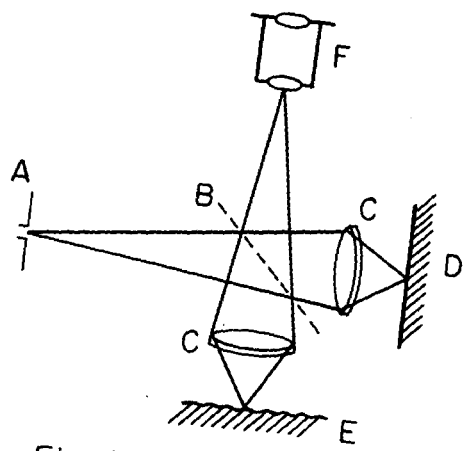

Fig. 2

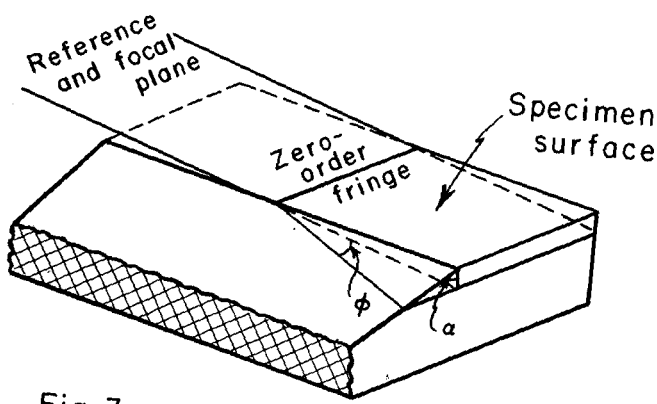

Fig. 3

MU-36109

Figs. 2 and 3

with an ordinary protractor and ruler. Several pictures were taken of each boundary and the most uniform region of each picture was used for measurements. Figure 4 shows a typical fringe photograph. The fringes in interferograms from "chemical" grooving were not as straight as those from thermal grooving. In the case of thermal grooving the metal was near enough to the melting point so that the surface diffusion was high and surface tension could smooth the surface. With lower temperature "chemical" grooving, every defect in the copper that affected interfacial surface energy between the metal and the salt left its mark on the surface. However, in the uniform regions, good reproducibility could be obtained.

After each bicrystal had been treated and the boundary energy measured at several temperatures, the crystals were electroplated with an amount of silver equalling .02 atomic percent. The bicrystals were then annealed in a $He+H_2$ atmosphere at 1000°C for one week. Calculations based on available diffusion data indicate that the bicrystals should have attained a substantially uniform distribution of silver. After cooling, x-ray fluorescents of the surface of the bicrystals showed a surface concentration of 0.02 atomic percent, thus checking the diffusion calculations. The bicrystals were cooled from 1000°C by turning off the power to the furnace and permitting the furnace to cool slowly during the course of 30 hours. The bicrystals had the grain boundary energy measured using the same method as before.

The change of surface tension with temperature of the liquid salt used in this investigation was measured by the pendant drop method.[19] No measurable change in surface tension was found between 300°C and 1000°C.

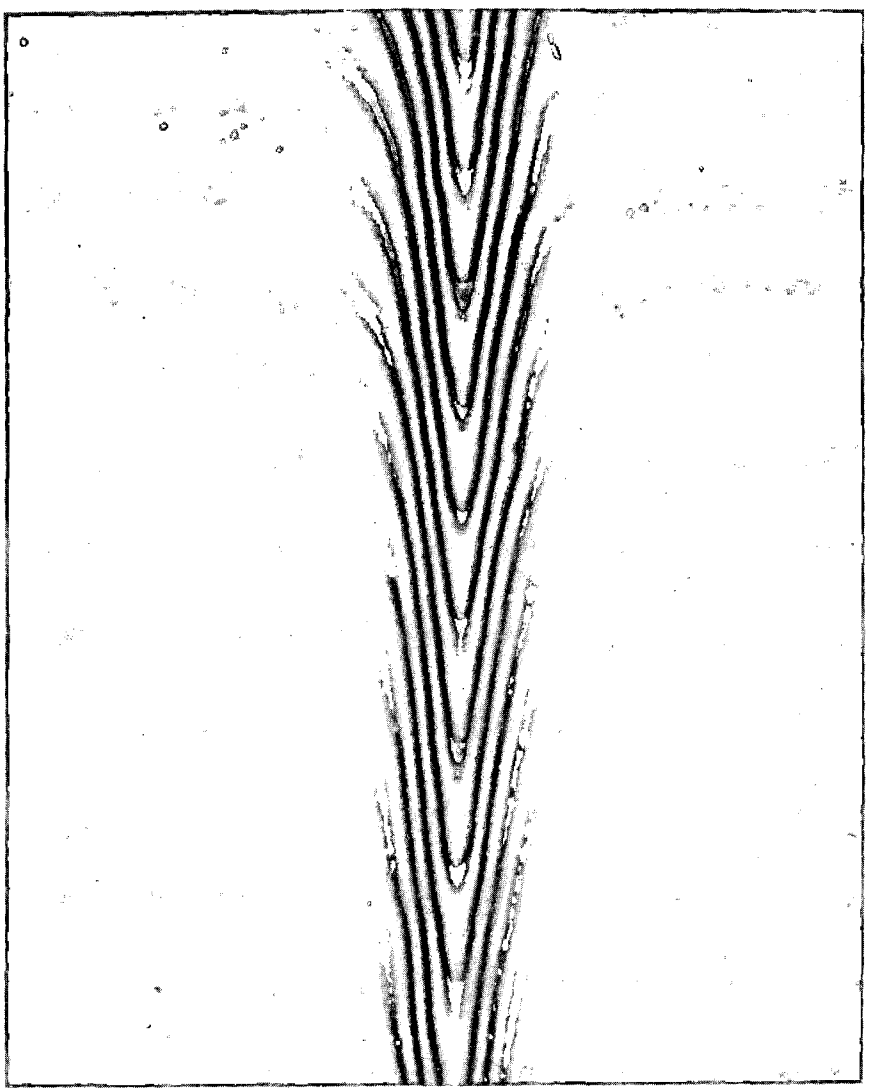

ZN-5165

Fig. 4

V. RESULTS

Two features of grain boundaries were investigated in this study: (a) temperature coefficient of grain boundary energy, and (b) reduction of grain boundary energy by solute atoms. The first of these could not be unambiguously measured because there is a possibility that the changes in dihedral angle were associated with changes in solid-liquid interfacial tension γ_{SL}. Direct measurement of this value could not be made because the contact angle between the liquid salt and copper was zero in the temperature range used in this study. However, indirect evidence was obtained which indicated that the temperature coefficient of the solid-liquid interfacial energy was small. The surface tension of copper is estimated to vary less than 3% between 1000°C and room temperature.[20] The change in the surface tension of the liquid salt was measured by the author and found to be less than four percent over the range of temperature used in this investigation.

The surface tension of the copper is the work necessary to form a unit area of surface in vacuum. When this surface is formed in any other medium, i.e. molten salt, the work to form the surface is less. The subtractive nature of this process makes it reasonable to expect that the temperature coefficient of the interfacial tension be no more than the coefficient for the surface tension of the copper or that of the molten salt.

The strain energy model of grain boundary set forth in the beginning of the study predicts a temperature coefficient of grain boundary energy $(\partial\gamma_{Gb}/\partial T)$ to be the same as that for the shear modulus.

The temperature coefficient of the shear modulus is about[21]

1.5×10^{-4} °C^{-1}. The slope of the modulus vs. the temperature curve is shown in Figs. 5, 6, and 7, and the energy points show fair agreement. The correspondence of the results does not justify claims of confirmation of the strain energy model. However, certain limits can be set. The accuracy of the results do justify asserting that the relative grain boundary energy increases with decreasing temperature. This increase is larger than would be from entropy consideration alone. Read and Shockley[22] have estimated that the entropy contribution to the grain boundary energy represents less than 2% at 1000°C. $\partial\gamma_{Gb}/\partial T$ is not larger than 2.5×10^{-4} and is fairly linear.

Figures 5, 6, and 7 show relative grain boundary energy for copper bicrystals that contain .02 percent silver as well as pure crystals. Two temperatures were selected for measuring grain boundary energy of doped crystals: 1000°C, the highest temperature at which these measurements were carried out, and 300°C, the lowest temperature at which equilibrium segregation might be obtained in a reasonable time.

The relative grain boundary energies at 1000°C for the doped boundaries were within the experimental accuracy, equal to that of the undoped crystals. At 300°C the relative grain boundary energy averaged 30 percent less than that of the undoped crystal. If this reduction in energy is assigned to silver atoms segregating to a boundary region of 10^{-7} cm thick, then, according to Eq. (9), the grain boundary concentration of Ag is 5×10^{-3} or 25 times higher than that of the bulk. The distortion energy or driving force would be 6,500 cal/mol. The reasonableness of this energy cannot be directly tested by Eq. (5) because of the difficulty of estimating the atomic radius of the solute atoms. Misfit energies, Q, from grain boundary energy measurements and from

Table I. Relative grain boundary energy of pure tilt copper bicrystal of three grain boundary angles.

Temperature °C	Grain Boundary Energy Relative to Surface Energy		
	26° Boundary	45° Boundary	53° Boundary
200	.280	.297	.305
300	.283	.299	.310
400	.262	.284	.287
500	.277	.298	.293
600	.266	.278	.271
700	.254	.266	.270
800	.240	.275	.279
900	.259	.254	.278
1000	.234	.265	.256

Table II. Relative grain boundary energy of pure tilt copper +.02% Ag bicrystal of three grain boundary angle at 300°C and 1000°C.

	Grain Boundary Energy Relative to Surface Energy		
	26° Boundary	45° Boundary	53° Boundary
300°C	.200	.210	.205
1000°C	.225	.250	.240

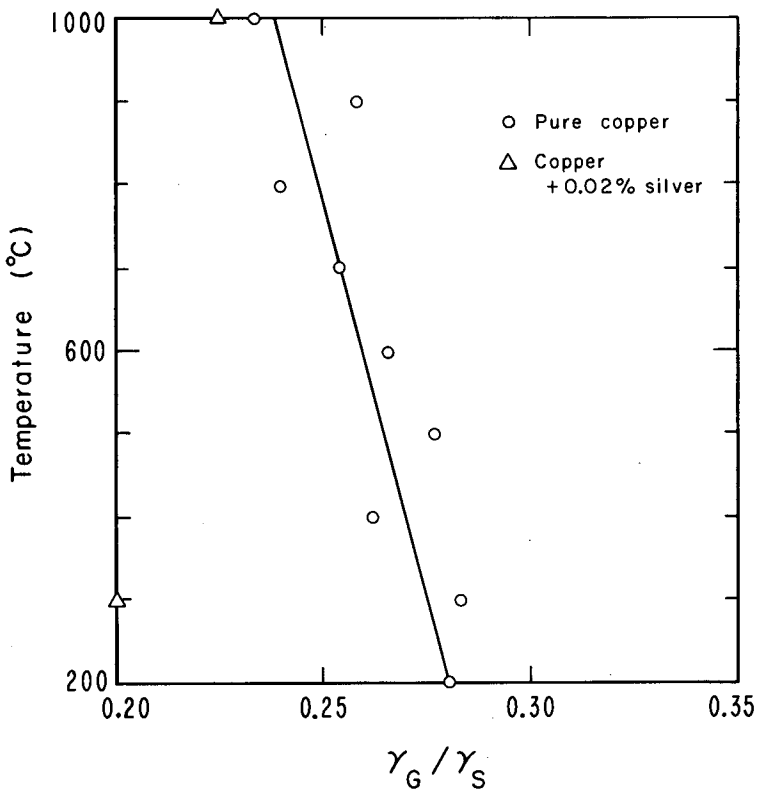

MU-36112

Fig. 5

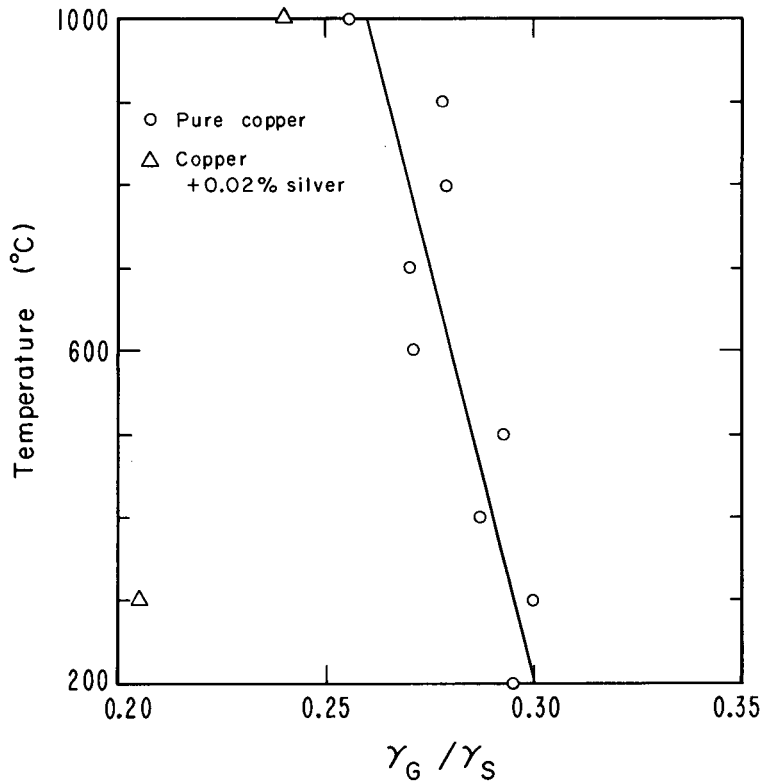

MU-36111

Fig. 6

lattice parameters along with atomic radii are shown in Table III for Ag, Sb, and Bi.

Table III

	Atomic radii Å	Atomic radii diff with Cu Å	Misfit energy Q in Cu lattice cal/mol
Ag	1.44	0.16	6,500 [1]
Sb	1.59	0.31	8,800 [2]
Bi	1.70	0.42	15,800 [2]

[1] Calculated from Eq. (9) based on grain boundary energy.

[2] Based on lattice parameter measurement by McLean.[23]

Figure 8 shows the relationship between misfit energy, Q, and the difference between atomic radii of solute and copper. The apparent linearity of the plot is probably due to a fortuitous cancellation of errors because a complete model would have to account for differences of valence, electronegativity, and tendency to form compounds.

A thermodynamic estimate of misfit energy can be made in the copper silver system because both elements have the same electronegativity and thus a departure from ideality of silver-copper solid solution is likely to be the result of size difference only. The excess partial molal free energy of silver in copper, $\bar{F}^{XS}_{Ag}$, is the extra free energy that a mole of silver in a copper solution has over a mole of silver in a solvent that created the same environment as found in pure silver. $\bar{F}^{XS}_{A}$ for dilute solid solution of silver in copper is 6973 calories/mole.[24]

Another independent estimate of the extent of solute segregation can be made by assuming that grain boundaries behave like a liquid.

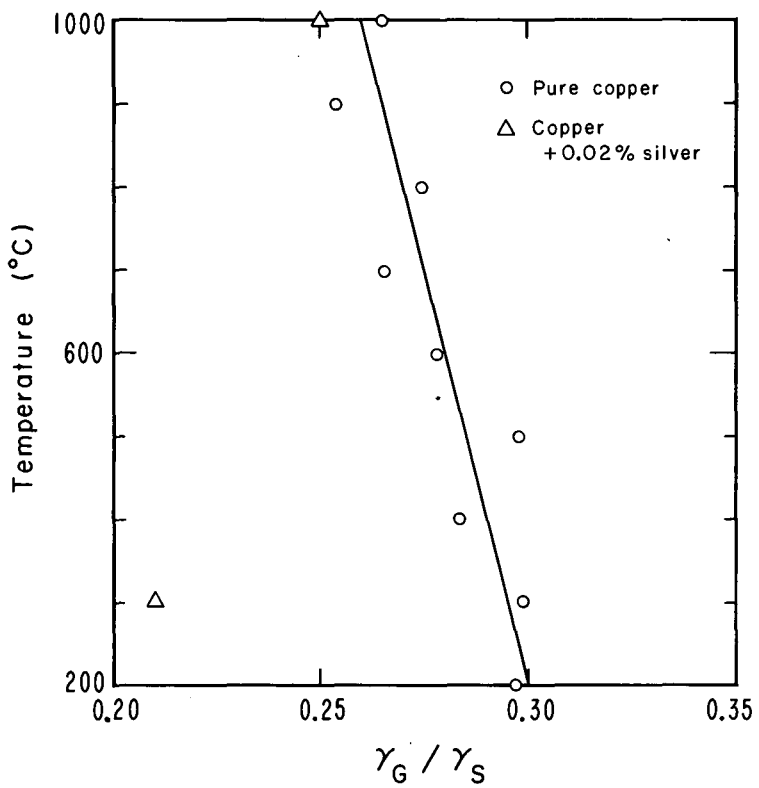

MU-36110

Fig. 7

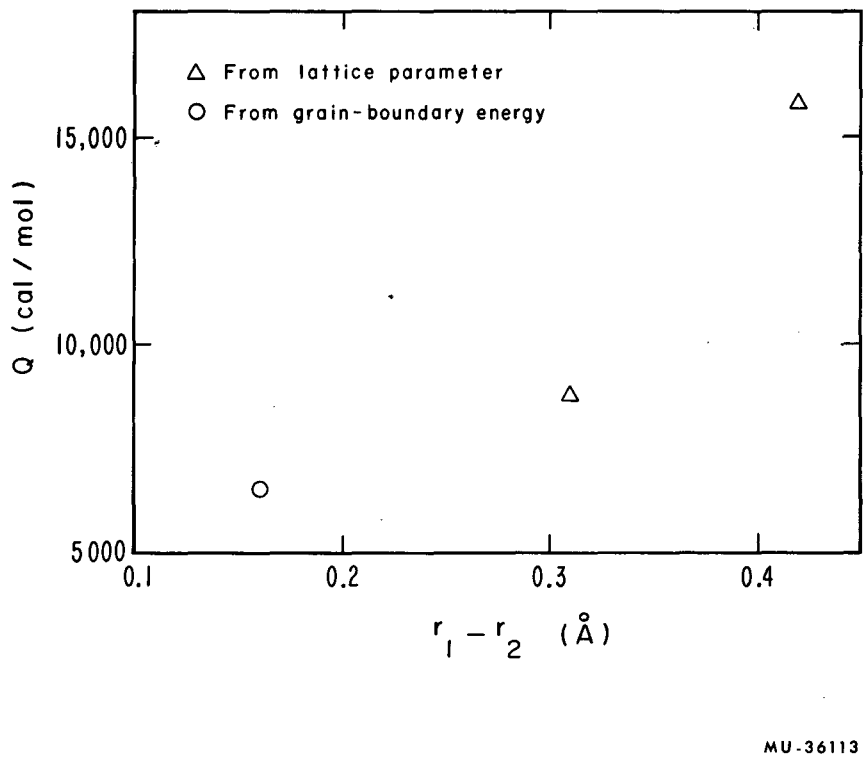
△ From lattice parameter
○ From grain-boundary energy
15,000
10,000
5000
Q (cal / mol)
0.1
0.2
0.3
0.4
$r_1 - r_2$ (Å)
MU-36113

Fig. 8

This model is unsuccessful in explaining mechanical properties of grain boundaries but it approximates the environment that a solute atom would find at a boundary. The mechanical forces associated with the difference of atomic size would be much smaller in a liquid than in a solid. Yet chemical interaction between solvent and solute atoms would be similar in the solid solution and the liquid solution. The derivation of Eq. (5) uses essentially these conditions. The tendency for solutes to concentrate in the liquid in equilibrium with solid can be determined from the phase diagram. Copper containing 4.5 percent silver will be in equilibrium with liquid containing 40 percent silver at 740°C, giving a distribution coefficient of 0.11. The distribution at other temperatures is given by:[25]

$$\ln K = \left(\frac{T_m}{T}\right) \ln K_m + \Delta S/R\ (T_m/T-1) \qquad (11)$$

where K is the distribution coefficient at temperature T,

K_m is the distribution coefficient at melting temperature T_m,

and ΔS is the entropy of fusion of the impurity at T_m.

ΔS for melting of silver is 2.31 cal/°K/g-atom,[24] and ΔS for grain boundary segregation should be smaller because grain boundary atoms have greater order than liquid atoms, thus the second term of Eq. (11) may well be disregarded. On this basis, Eq. (11) predicts a distribution coefficient between silver in bulk copper and silver in a liquid like boundary at 300°C of 0.02. The distribution coefficient calculated from grain boundary energies is 0.04.

Solute atoms with atomic radii different from the solvent will change the lattice parameter of the solvent. This change in lattice parameter can be detected by x-ray diffraction and a misfit energy can be calculated.

The derivation of Eq. (9) uses a single free energy difference between a bulk site and a boundary site. The number and energy of boundary sites also is assumed to remain constant during segregation of the solute to the boundary. Failure of the model can be anticipated in the example of a solute with a very high misfit energy. In the case of a solute with a misfit energy of 30,000 calories per mole, a bulk concentration of 100 parts per billion could saturate the grain boundary sites in coarse grained material even at 1000°K, preventing the boundary from playing any further role in solute segregation. A solute with a high misfit energy would, of course, have a low solubility, but probably not less than 100 parts per billion at 1000°K. All but the purest of metals should contain enough high misfit energy atoms to saturate grain boundaries if the distribution of atoms obeyed Eq. (9). Once saturated these boundaries would no longer attract solute atoms. However, it is well known that the addition of small amounts of solid solution solute can have a great effect on high temperature intercrystalline fracture. This could not occur if grain boundaries were saturated in "pure" metals by impurities of less than 100 parts per billion, then no change should be observed in grain boundary behavior by the addition of 100 parts per million of intentionally added solute atoms. But large changes are often observed, and the reason behind this apparent inconsistency lies in the fact that not all grain boundary sites are alike. Some foreign atoms will have a size which differs greatly from that of the solvent atom. Therefore a site capable of relieving all the elastic strain induced in the lattice by a very large (or small) atoms would have to be very different in "size" from the average lattice sites. Such sites might be few compared to the number of boundary sites suitable in size to

accommodate foreign atoms closer in size to the solvent atoms. Evidence for sites of different size or "energy" was found by Darkin,[13] who studied the behavior of nitrogen in iron. In cold worked iron there appeared to be only two types of sites for nitrogen. However, experimental limitations would have prevented the detection of even higher energy sites of lower concentration, even if they had existed. It is highly probable that for every solute there is more than one "energy level" for solute segregation. In a high angle boundary with a complex structure, the "energy level" of boundary sites suitable for segregation would very likely be a spectrum of energies.

The grain boundary sites are capable of minimizing misfit energy because they reduce the elastic strain created by the presence of foreign atoms. If the sites are close together, their stress fields overlap. Therefore occupancy of a site by a solute atom not only reduces the stress at the occupied site, but will also change (or even reverse) the stress field around neighboring sites. As segregation proceeds, the free energy difference between boundary sites unoccupied by solute atoms and bulk sites will decrease.

For an accurate understanding of grain boundary segregation, a complete inventory would have to be made of the number and kinds of foreign atoms at boundaries under a variety of bulk concentration of solutes, and at a number of different temperatures. Only in this way could the number and energy distribution of boundary sites be evaluated.

VI. CONCLUSIONS

It is possible to form an equilibrium grain boundary groove in copper at temperatures as low as 200°C by an ion exchange process in molten salt. Grain boundary energies determined with this method showed an energy variation with temperature that was similar to the variation of shear modulus with temperature. The dislocation model of grain boundaries presumes that most of the grain boundary energy is associated with elastic strain energy. Therefore this model would predict that the temperature coefficient of the grain boundary energy and shear modulus should be equal.

The grain boundary energy of copper containing 0.02 percent silver at 1000°C was essentially the same as that of pure copper. However, at 300°C, the grain boundary energy was 30 percent less than that of pure copper. If this reduction in grain boundary energy is the result of the larger silver atoms concentrating at the grain boundary and relieving some of the strain energy, then the magnitude of this reduction is consistent with thermodynamic data and atomic size difference considerations.

ACKNOWLEDGEMENTS

The author would like to express appreciation to Professor Earl R. Parker for his continuous advice and encouragement during the course of this graduate work.

This research was conducted under the auspices of the United States Atomic Energy Commission.

REFERENCES

1. W. Rosenhaim and J. C. W. Humphery, J. Iron and Steel Inst. 81, 219 (1913).
2. Z. Jeffries and R. S. Archer, Science of Metals (McGraw-Hill Publishing Co., New York, 1924), p. 73.
3. J. M. Burger, Proc. Kon. Medd. v Wet. Amsterdam, 42, 293 (1939).
4. W. L. Bragg, Proc. Phys. Soc. 52, 54 (1940).
5. P. B. Hirsch, M. J. Whelan and R. W. Horne, Phil. Mag. 1, 677 (1956).
6. J. H. Van der Merwe, Proc. Phys. Soc. 63A, 616 (1950).
7. W. T. Read and W. Shockley, Phys. Rev. 78, 275 (1950).
8. W. T. Read and W. Shockley, Acta Met. 1, 251 (1953).
9. N. Gjostein and F. N. Rhines, Acta Met. 7, 319 (1959).
10. A. Seeger and G. Schottky, Acta Met. 7, 495 (1959).
11. M. T. Stewart, R. Thomas, K. Kawchop, W. C. Winegard and B. Chalmers, Phys. Rev. 83, 657 (1951).
12. C. A. Wert, J. Metals 2, 1242 (1950).
13. L. S. Darken, Trans. ASM 54, 600 (1961).
14. B. J. Pines, J. Phys. Sov. 3, 309 (1940).
15. J. C. Slater, Introduction to Chemical Physics (McGraw-Hill Publishing Co., New York, 1939), p. 275.
16. H. Mykura, Acta Met. 3, 436 (1955).
17. N. A. Gjostein, Carnegie Institute of Technology, Ph.D. Thesis, 1958.
18. F. R. Tolman and J. G. Wood, J. Sci. Instr. 33, 236 (1956).
19. J. Davis and F. Bartell, Anal. Chem. 20, 1182 (1948).
20. H. Udin, A. J. Shalev and J. Wolff, J. Metals 1, 186 (1949).
21. W. T. Read, Dislocation in Crystals (McGraw-Hill, Inc., New York, 1953).

22. W. T. Read and W. Shockley, Phys. Rev. 78, 275 (1950).

23. D. McLean, Grain Boundaries in Metals (Oxford Press, 1957) p.125.

24. R. Hultgren, R. Orr, P. Anderson and K. K. Kelly, Selected Values of Thermodynamic Properties of Metal and Alloys (John Wiley and Sons, New York, 1963) p. 363

25. C. D. Thurmond and S. D. Struthers, J. Phys.Chem. 57, 831 (1953).

26. C. R. Linnik, Acad. Sci. URSS 21 (1933).

FIGURE CAPTIONS

Fig. 1 Furnace used in grain boundary grooving.

Fig. 2 Linnik optical system for interference microscope.

A - Monochromatic light source

B - Half-silvered mirror

C - Matched objectives

D - Reference mirror

E - Specimen

F - Eyepiece

Fig. 3 Relationship between Φ and α.

Fig. 4 Typical interferogram of a chemically grooved copper bicrystal; contour interval, 0.27μ, 1580X.

Fig. 5 Relative energy vs. temperature for a 26°[001] tilt boundary. Line shows slope of shear modulus.
γ_G = Grain boundary energy
γ_S = Surface energy

Fig. 6 Relative energy vs. temperature for a 45°[001] tilt boundary. Line shows slope of shear modulus.
γ_G = Grain boundary energy
γ_S = Surface energy

Fig. 7 Relative energy vs. temperature for a 53°[001] tilt boundary. Line shows shape of shear modulus.
γ_G = Grain boundary energy
γ_S = Surface energy

Fig. 8 Misfit energy vs. atomic radii difference.