UC San Diego

UC San Diego Electronic Theses and Dissertations

Title

Resistance in compositional practice : three mediatory works

Permalink

https://escholarship.org/uc/item/1bj6608d

Author

Tacke, Daniel Arthur

Publication Date

2008

Supplemental Material

https://escholarship.org/uc/item/1bj6608d#supplemental

Peer reviewed|Thesis/dissertation

eScholarship.org Powered by the California Digital Library
University of California

UNIVERSITY OF CALIFORNIA, SAN DIEGO

Resistance in Compositional Practice: Three Mediatory Works

A Thesis submitted in partial satisfaction of the requirements for the degree
Master of Arts

in

Music

by

Daniel Arthur Tacke

Committee in charge:

Professor Rand Steiger, Chair
Professor Charles Curtis
Professor Lei Liang

2008

© Copyright

Daniel Arthur Tacke, 2008

All rights reserved.

The Thesis of Daniel Arthur Tacke is approved and it is acceptable in quality and form for publication on microfilm:

_____

_____

_____
Chair

University of California, San Diego

2008

DEDICATION

In recognition of ‘The Monolithic All-Academy’

TABLE OF CONTENTS

Signature Page..... iii

Dedication..... iv

Table of Contents..... v

Acknowledgements..... vi

Abstract..... vii

Score No. 1 – *khsyn*..... 1

Score No. 2 – *die nacht war kalt*..... 25

Score No. 3 – *a quiet and lingering violence*..... 89

Recordings of Compositions..... ResistComp (DVD)

1 – *die nacht war kalt*..... ResistComp/die_nacht

2 – *a quiet and lingering violence*..... ResistComp/quiet_vio

Recordings on file at Mandeville Special Collections Library.

ACKNOWLEDGEMENTS

I would like to acknowledge – with gratitude – the members of my committee for their support and guidance.

I would also like to acknowledge and thank my wife – this would not have been possible without her insightful proofreading and encouragement in the face of the innumerable challenges that arose in getting my scores to fit on such small pages.

ABSTRACT OF THE THESIS

Resistance in Compositional Practice: Three Mediatory Works

by

Daniel Arthur Tacke

Master of Arts in Music

University of California, San Diego, 2008

Professor Rand Steiger, Chair

Resistance in music may take many forms and, resultantly, has the potential to influence any musical entity in a variety of ways – whether in its creation or as part of a later engagement by performers or listeners. This collection of documents demonstrates several possible manifestations of musical resistance in the private act of creation. The three scores exhibit compositional practices wherein contradictory procedures led to mediatory transformations of material – a process that resists both intuitive and systematic thinking.

SCORE NO. 1

khsyn

For solo viola

2007

NOTATIONAL PRACTICES

BOW PRESSURE IS NOTATED AS FOLLOWS:

□ : NORMAL PRESSURE

▨ : WHISPER PRESSURE

BOWING INDICATIONS ARE AS FOLLOWS:

⊓/∨ : CHANGE BOW DIRECTION

[⊓/∨]→ : DO NOT CHANGE BOW DIRECTION

IN THE ABSENCE OF ONE MARKING OR THE OTHER, THE PERFORMER MAY CHANGE BOW DIRECTION AT HIS OR HER LEISURE.

QUARTER TONES SHOULD BE TREATED AS INFLECTIONS OF "NORMAL" PITCHES, AND NOT AS ABSOLUTE FREQUENCIES. THEY ARE NOTATED AS FOLLOWS:

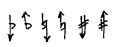

DURATIONS FOR GLISSANDI ARE NOTATED WITH "COMPOUND" NOTEHEADS.

FOR EXAMPLE :

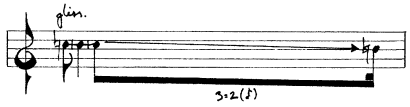

THE FOLLOWING SYMBOL INDICATES THAT ALL FOUR STRINGS SHOULD BE INSTANTLY MUTED, OR "CHOKED."

⊕

PERFORMANCE PRACTICE

MANY PARAMETERS ARE GIVEN AS FLUCTUATIONS BETWEEN VARIOUS "EXTREME" VALUES (SUCH AS VIBRATO, BOW PLACEMENT, BOW PRESSURE, ETC.). THESE TRANSITIONS SHOULD BE PERFORMED AS SMOOTHLY AND CONTINUOUSLY AS POSSIBLE.

ANY NOISE OR DRAMA OWING TO PAGE TURNS SHOULD BE KEPT TO AN ABSOLUTE MINIMUM.

THE PERFORMER MUST HAVE TWO DIFFERENT MUTES AVAILABLE FOR THIS PIECE: AN "ORDINARY" WOODEN OR RUBBER MUTE AND A HEAVY METAL PRACTICE MUTE. CONSIDERATION SHOULD BE GIVEN TO THE SOUND QUALITIES OF EACH: THE ORDINARY MUTE SHOULD STILL PRESENT A RELATIVELY WARM TONE WHILE THE METAL MUTE SHOULD SOUND ENTIRELY THIN AND STRAINED. IF ONE IS AVAILABLE, A LEATHER MUTE MIGHT BE SUBSTITUTED FOR THE ORDINARY MUTE.

OCCASIONALLY IT WILL BE NECESSARY FOR THE PERFORMER TO SEPARATE THE TRADITIONALLY/STEREOTYPICALLY JOINED PARAMETERS OF BOW SPEED AND BOW PRESSURE. DYNAMICS (EFFECTIVELY: BOW SPEED) AND PRESSURE ARE NOTATED ON SEPARATE PLANES IN THE SCORE. IN THE EVENT THAT THESE PARAMETERS SHOULD MOVE IN OPPOSITE DIRECTIONS SIMULTANEOUSLY (AS INDICATED BY DYNAMIC HAIRPINS BEING NOTATED WITH DASHED — RATHER THAN SOLID — LINES) THE INTEGRITY OF EACH TRAJECTORY MUST BE MAINTAINED.

THE OVERALL SOUNDSCAPE SHOULD BE ONE OF FRAGILITY, INSTABILITY, AND QUIET, CRYSTALLIZED ELEGANCE. ANY JARRING MOMENTS IN THE SCORE SHOULD BE EXECUTED WITH THIS IN MIND, WEIGHING THE LOCAL TURMOIL AGAINST THE GREATER GENTLENESS OF THE PIECE AS A WHOLE.

KHSY~

[i] ♪=70, "my heart is of the winter"

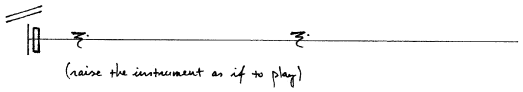

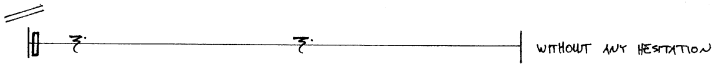

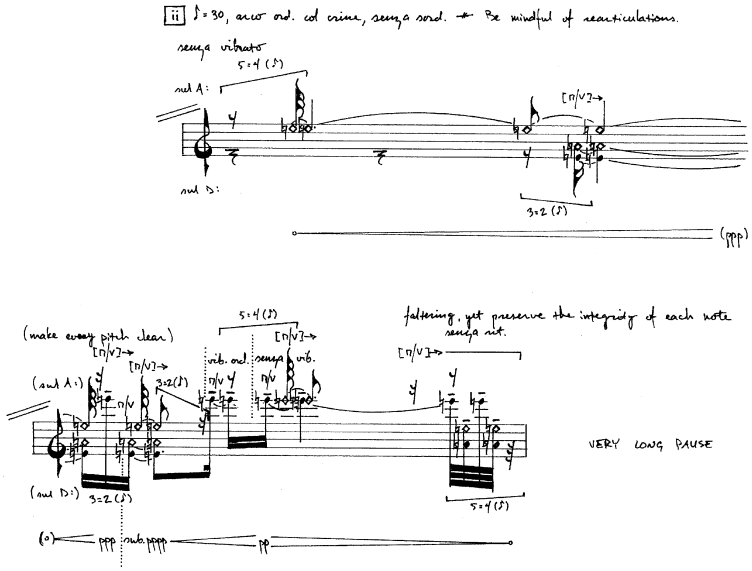
ii ♪ = 30, arco ord. col crine, senza sord. ✶ Be mindful of rearticulations.
senza vibrato
5:4 (♪)
sul A:
sul D:
[n/v]→
3:2 (♪)
(ppp)
(make every pitch clean)
[n/v]→
[n/v]→
(sul A:)
3:2(♪)
n/v
(sul D:)
3:2 (♪)
5:4 (♪)
[n/v]→
vib. ord.
senza vib.
n/v
n/v
flattering, yet preserve the integrity of each note
senza vit.
[n/v]→
VERY LONG PAUSE
5:4 (♪)
(o)
ppp
sub. pppp
pp

KHSPW

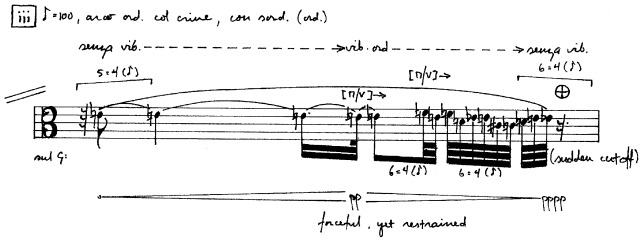
♪=100, arco ord. col crine, con sord. (ord.)
sempre vib.
vib. ord
sempre vib.
5:4 (♪)
[n/v]
[n/v]
6:4 (♪)
sul G
6:4 (♪)
6:4 (♪)
(sudden cutoff)
pp
ppppp
fearful, yet restrained

KHSRN

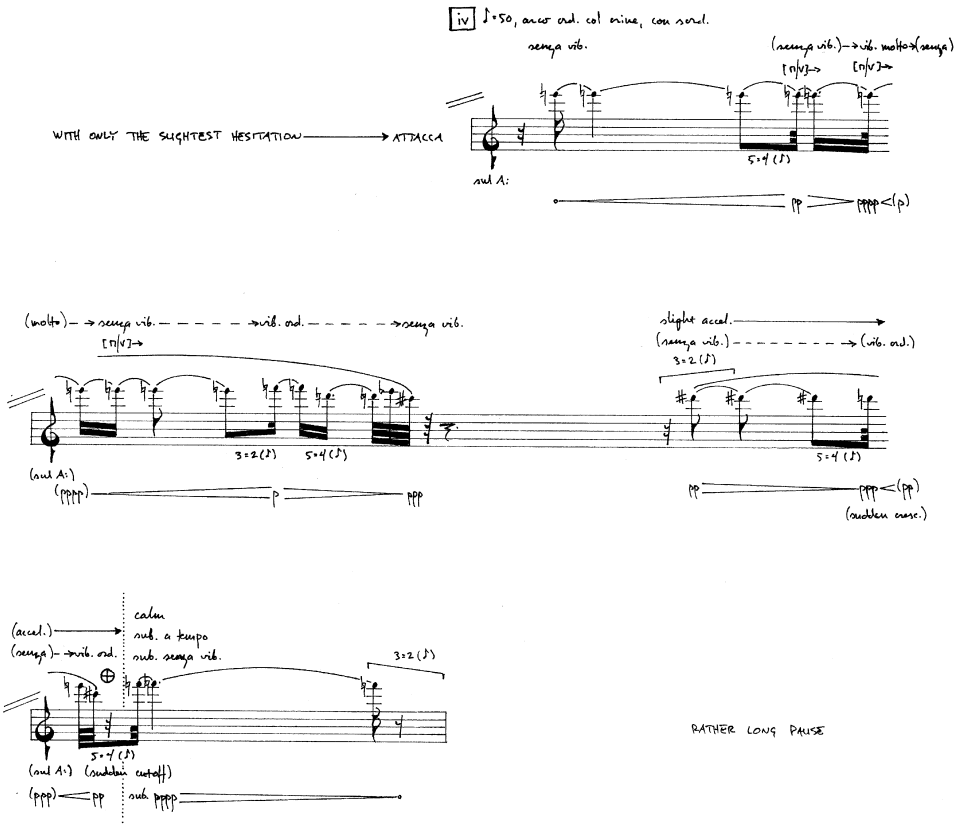
iv ♪=50, arco ord. col crine, con sord.
sempre vib.
(sempre vib.)→vib. molto→(sempre)
[n/v]→
[n/v]→
WITH ONLY THE SLIGHTEST HESITATION
ATTACCA
5:4 (♪)
sul A:
pp
pppp<(p)
(molto)→sempre vib.- - - - - →vib. ord. - - - - - →sempre vib.
[n/v]→
3:2 (♪)
5:4 (♪)
(sul A:)
(pppp)
p
ppp
slight accel.
(sempre vib.)- - - - - - - - →(vib. ord.)
3:2 (♪)
5:4 (♪)
pp
ppp<(pp)
(sudden cresc.)
(accel.)
(sempre)→vib. ord.
calm
sub. a tempo
sub. sempre vib.
3:2 (♪)
5:4 (♪)
(sul A:)
(sudden cutoff)
(ppp)
pp
sub pppp
RATHER LONG PAUSE

V ♩=40, arco ord. col crine, senza sord. senza vib.

(only slight)

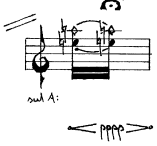

KHSYN

ONLY AFTER PROLONGED HESITATION

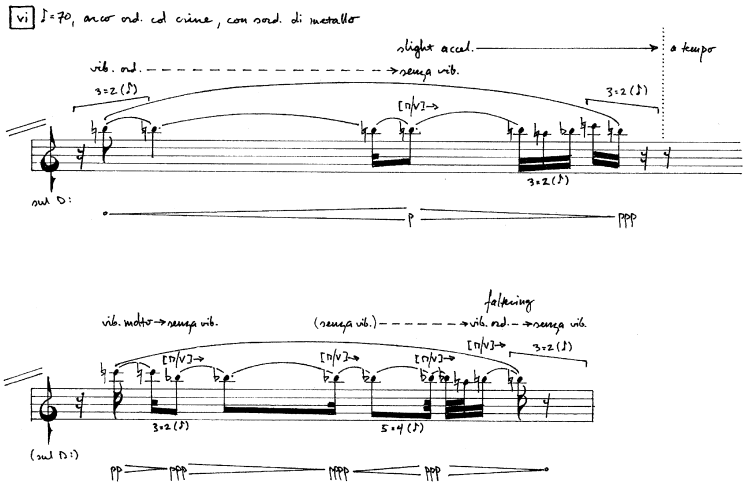

WITH ONLY BRIEF HESITATION (ATTACCA)

KHSYN

vii ♪=50, arco col crine, senza sord. — Be mindful of rearticulations. — Suddenly forceful, yet always fragile.

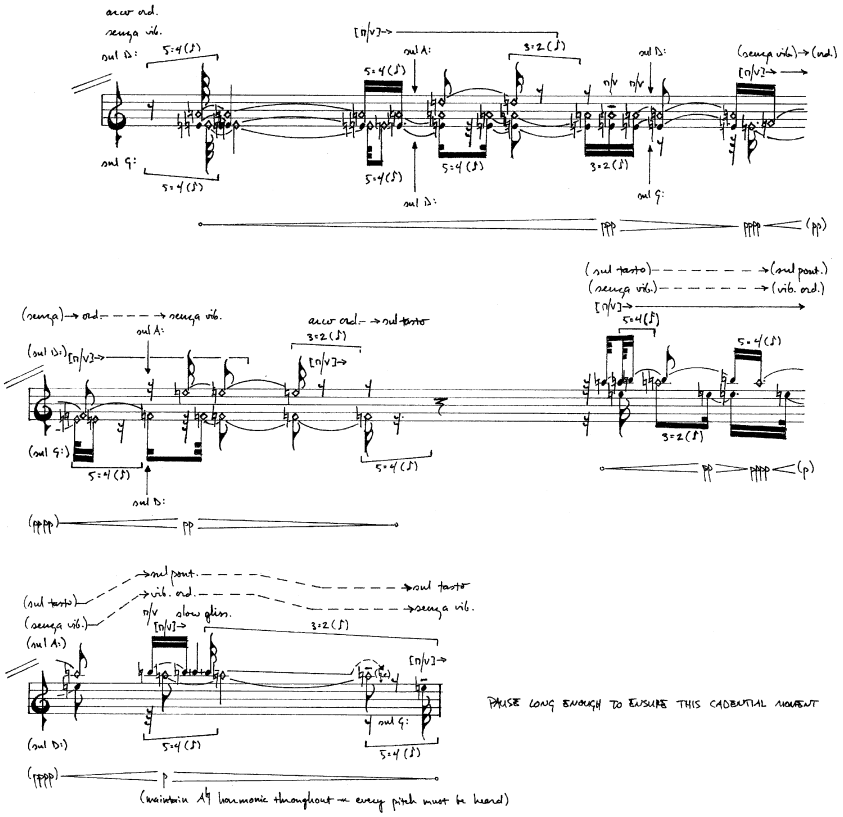

PAUSE LONG ENOUGH TO ENSURE THIS CADENTIAL MOMENT

KHSRN

viii arco ord., col crine, con sord. (ord.), apathetic

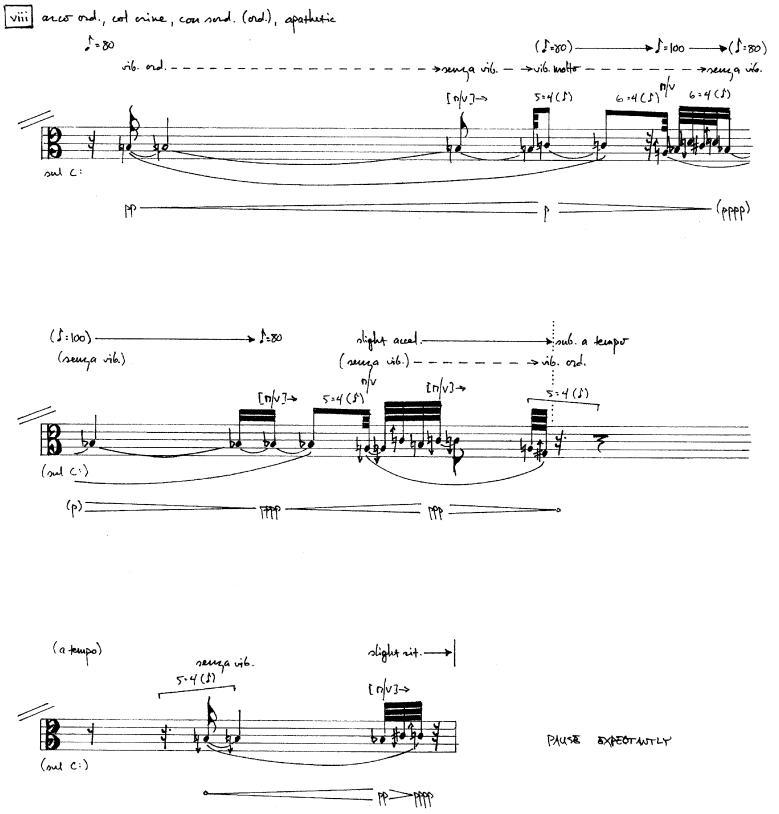

KHSKA

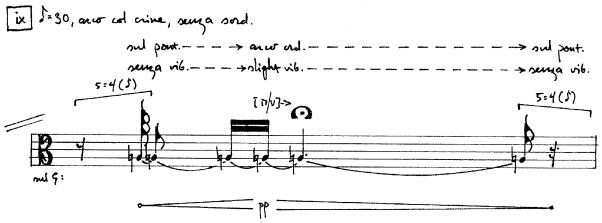

PAUSE SUFFICIENTLY

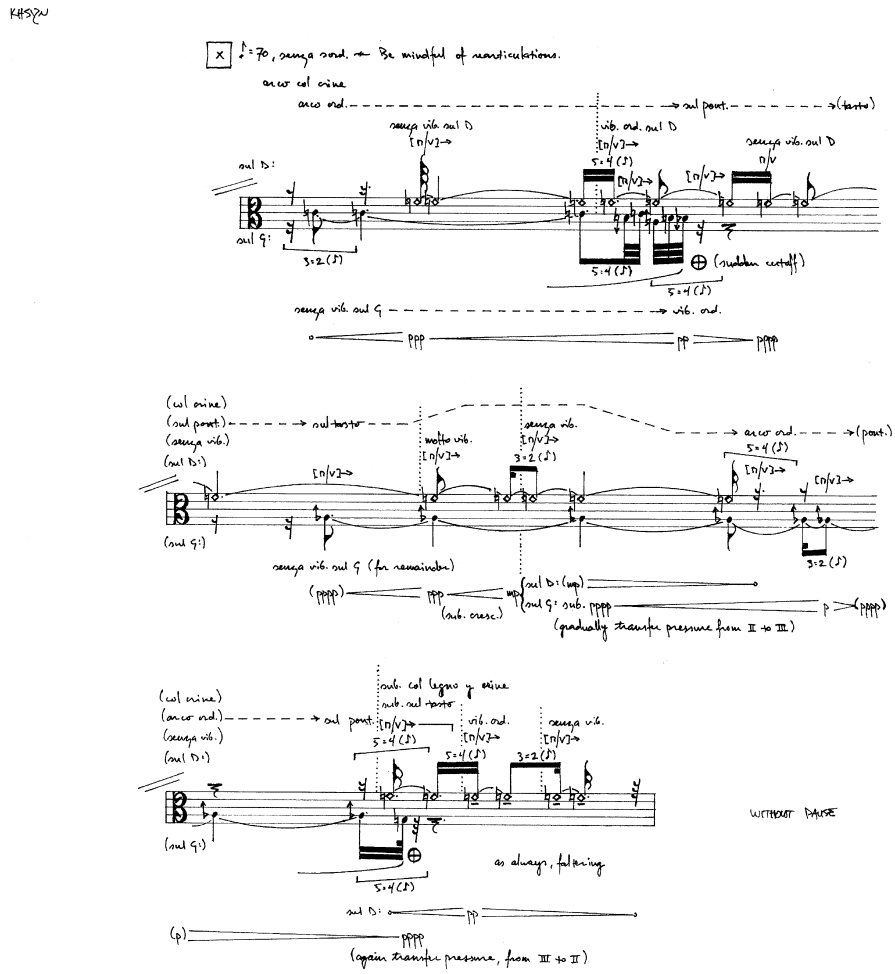
KHSYN
X ♪=70, senza sord. ← Be mindful of rearticulations.
arco col crine
arco ord.
sul pont.
(tasto)
senza vib. sul D
vib. ord. sul D
senza vib. sul D
sul D:
sul G:
3=2 (♪)
5=4 (♪)
(sudden cutoff)
senza vib. sul G
vib. ord.
ppp
pp
pppp
(col crine)
(sul pont.)
sul tasto
(senza vib.)
(sul D:)
(sul G:)
molto vib.
senza vib.
arco ord.
(pont.)
senza vib. sul G (for remainder)
(pppp)
ppp
(sub. cresc.)
mp
(sul D: (mp)
(sul G: sub. pppp
p
(pppp)
(gradually transfer pressure from II to III)
sub. col legno y crine
sub. sul tasto
(col crine)
(arco ord.)
sul pont.
vib. ord.
senza vib.
(senza vib.)
(sul D:)
(sul G:)
as always, faltering
sul D:
pp
(p)
pppp
(again transfer pressure, from III to II)
WITHOUT PAUSE

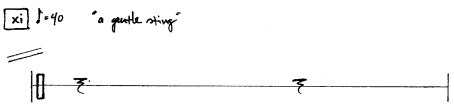
xi
♩=90
"a gentle string"

KHSYN

WATT

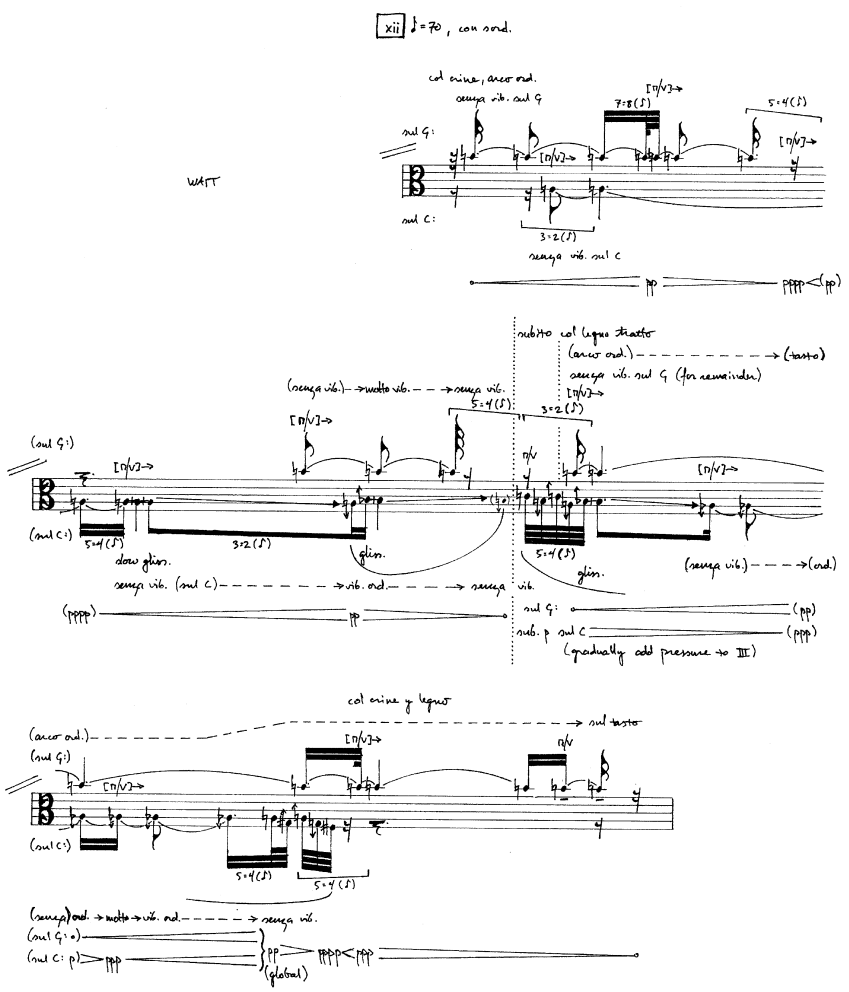
xii ♪=70, con sord.
col crine, arco ord.
sempre vib. sul G
sul G:
sul C:
3:2 (♪)
sempre vib. sul C
subito col legno tratto
(arco ord.)
(tasto)
sempre vib. sul G (for remainder)
(sempre vib.)
molto vib.
sempre vib.
5:4 (♪)
(sul G:)
(sul C:)
slow gliss.
(sempre vib. (sul C)
vib. ord.
sempre vib.
gliss.
(sempre vib.)
(ord.)
sul G:
sub. p sul C
(gradually add pressure to III)
col crine y legno
(arco ord.)
sul tasto
(sempre) ord.
molto vib. ord.
sempre vib.
(sul G: o)
(sul C: p)
(global)

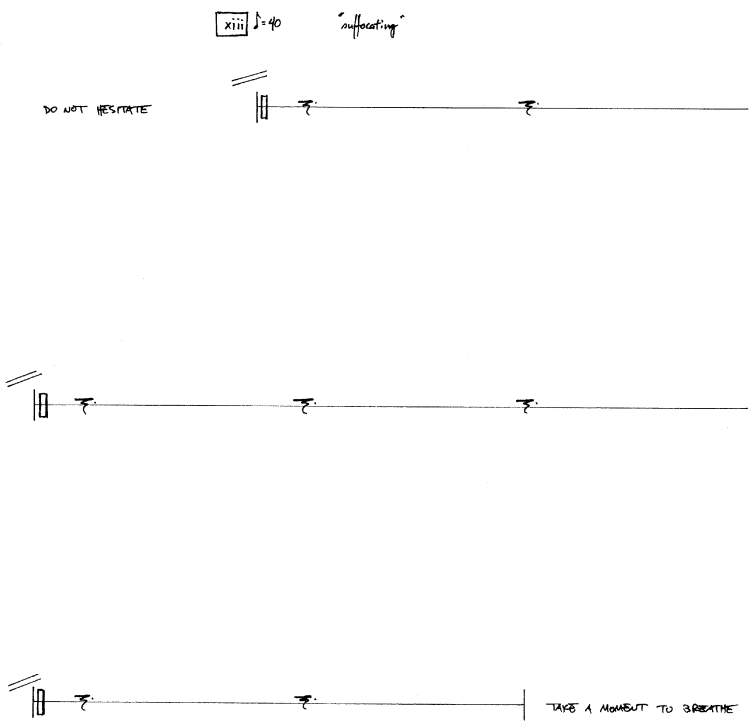
xiii
♪= 40
"suffocating"
DO NOT HESITATE
TAKE A MOMENT TO BREATHE

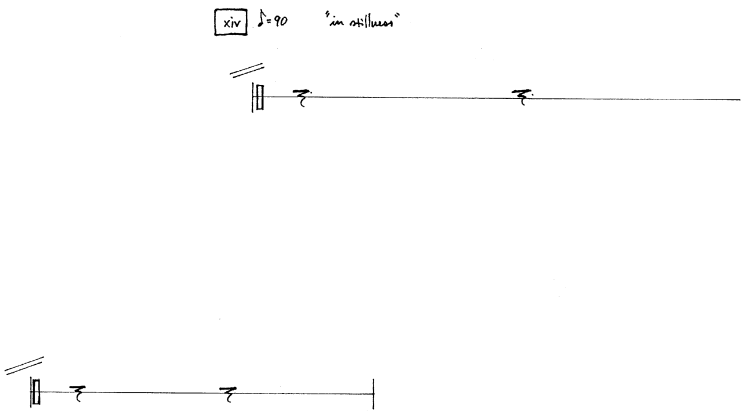
xiv
♪=90
"im stillen"

KHSYN

MOVING ON

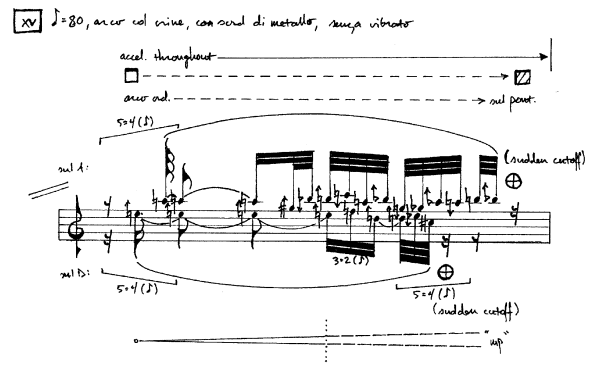

AN UNCOMFORTABLY LONG SILENCE

KHSQN

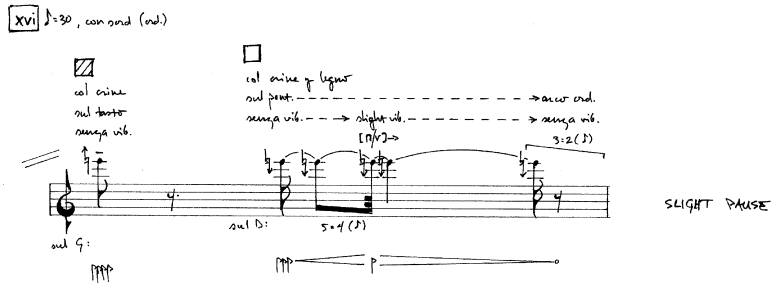
XVi
♪=30, con sord (ord.)
col crine
sul tasto
senza vib.
col crine poi legno
sul pont.
senza vib.
slight vib.
ord.
senza vib.
[n/v]
3:2(♪)
sul G:
sul D:
5:4(♪)
SLIGHT PAUSE

KHSQN

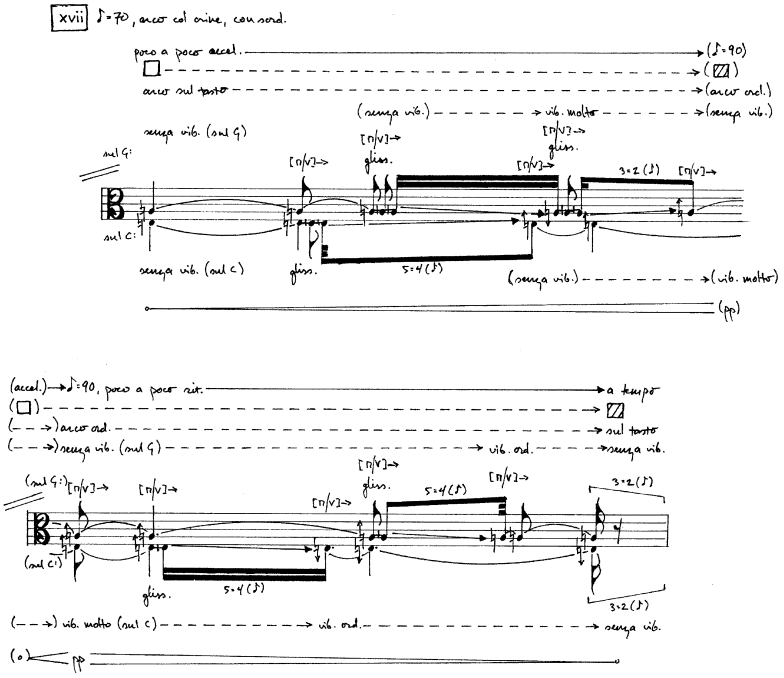
xvii
♪=70, arco col ovine, con sord.
poco a poco accel.
(♪=90)
arco sul tasto
(arco ord.)
(senza vib.)
vib. molto
(senza vib.)
senza vib. (sul G)
sul G:
sul C:
[n/v]→
gliss.
3:2 (♪)
5:4 (♪)
senza vib. (sul C)
(vib. molto)
(pp)
(accel.)→♪=90, poco a poco rit.
a tempo
(arco ord.
sul tasto
vib. ord.
vib. molto (sul C)
pp

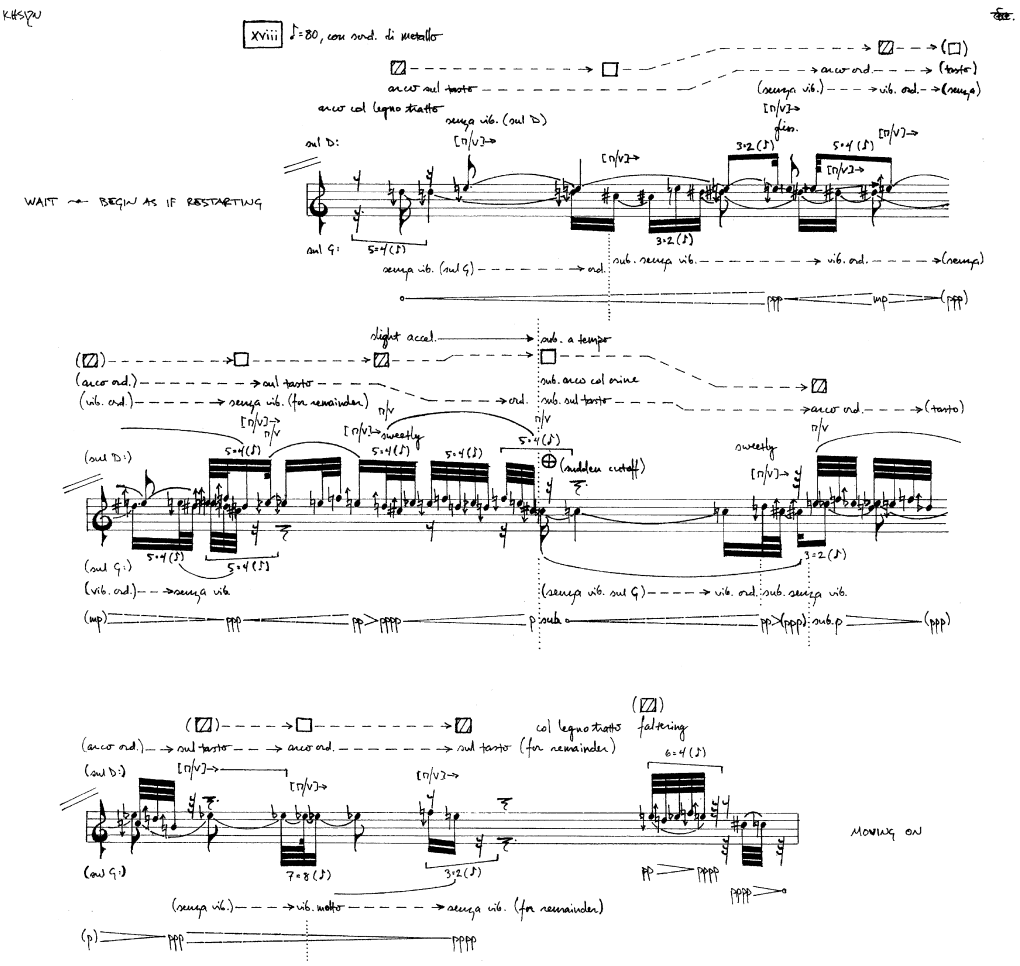
XVIII
♪=80, con sord. di metallo
arco sul tasto
arco col legno tratto
senza vib. (sul D)
sul D:
sul G:
WAIT → BEGIN AS IF RESTARTING
sub. senza vib.
slight accel.
sub. a tempo
sub. arco col crine
sub. sul tasto
sweetly
(sudden cutoff)
(senza vib. sul G)
col legno tratto
faltering
MOVING ON

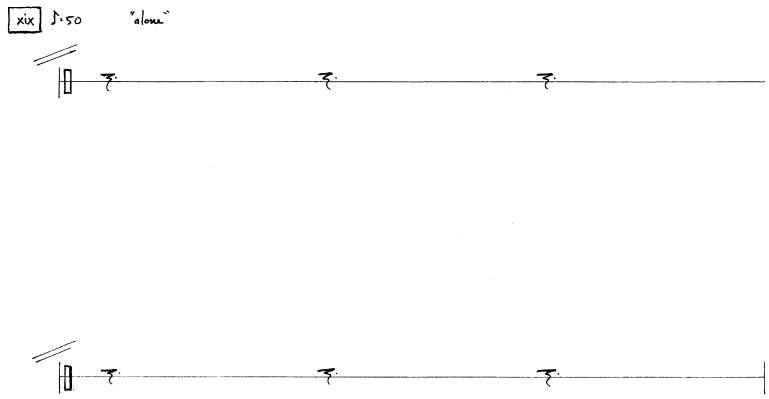
xix
"alone"

KHSIPW

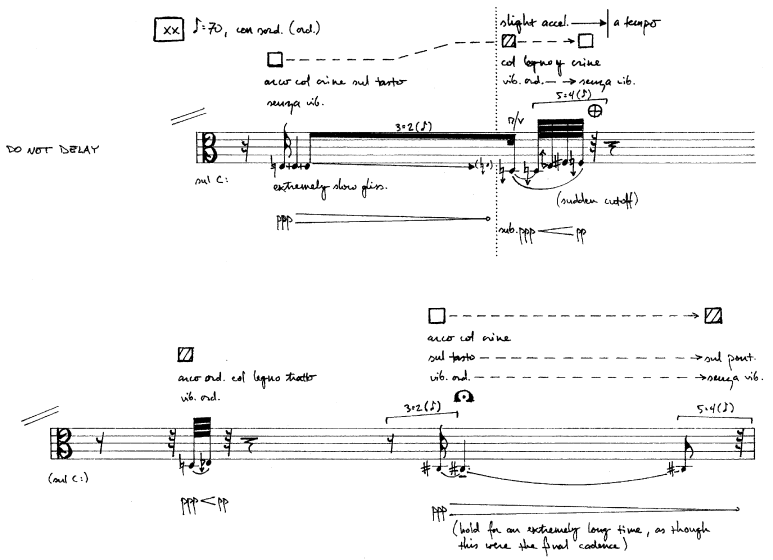

WAIT FOR A VERY LONG TIME ~ BREATHE, AS THOUGH THIS WERE THE END OF THE PIECE

KHSIZN

XXi ♪=30, ▨, arco col legno tratto sul tasto, con sord. di metallo
(continue to move up the fingerboard throughout, as far as possible)

BUT IT IS NOT

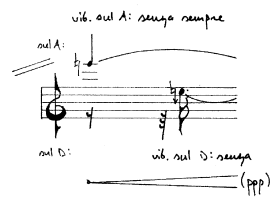

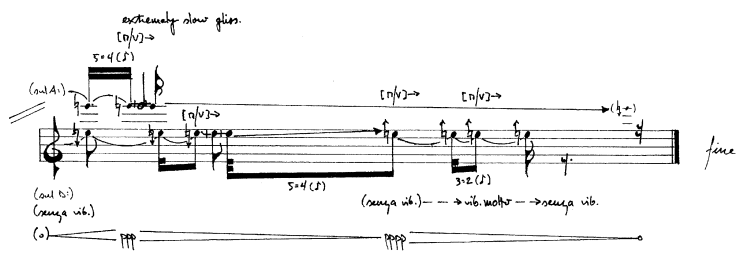

15 April, 2007 ~ San Diego ~

SCORE NO. 2

die nacht war kalt

For soprano voice, clarinet in B-flat, violoncello, and piano

2007

REGARDING THE SCORE

GENERAL NOTATION PRACTICES:

- NO TIME SIGNATURES ARE USED. RATHER THAN COUNTING WACTIVE RESTS, PLAYERS SHOULD LISTEN TO ONE ANOTHER AND CAREFULLY INTERTWINE THEIR PARTS. THE FIRST SONG MAKES USE OF A SYSTEM OF ACTIVATION WHEREIN ALL OF THE PARTS SHARE EQUAL CONTEXTUAL WEIGHT. THE NOTATION FOR THE SECOND SONG IS FOUNDED ENTIRELY ON THE PIANO, AND THE PLAYERS SHOULD APPROACH THEIR PARTS BEARING THIS W MIND.
- NO CONDUCTOR IS NECESSARY.
- EACH PAGE LASTS APPROXIMATELY 15 SECONDS.
- MICROTONES SHOULD BE TREATED AS INFLECTIONS OF 'NORMAL' PITCHES, NOT AS 'ABSOLUTE' FREQUENCIES.
- THE FOLLOWING SYMBOL IS USED FOR THE SOPRANO, CLARINET, AND VIOLONCELLO TO SIGNIFY AN IMMEDIATE 'CHOKING' OF ALL SOUND.

⊕

SOPRANO, POINTS OF SPECIAL INTEREST:

- THROUGHOUT THIS WORK, VIBRATO IS USED AS A TYPE OF ORNAMENTATION OR COLORATION. USUALLY THIS LINES UP PRECISELY WITH DYNAMIC SWELLS OR LYRICAL CONTOURS. SOMETIMES IT DOES NOT, IN WHICH CASE VIBRATO MUST BE SEPARATED FROM OTHER DECORATIVE PARAMETERS.
- THE MICROTONAL GLISSANDI IN THE FIRST SONG ARE ANOTHER TYPE OF DECORATIVE PARAMETER — THEY SERVE MERELY AS SLIGHT COLORATIONS OF THE GIVEN PITCH(ES) AND SHOULD NOT BE OVEREMPHASIZED. SONICALLY, IT SHOULD SEEM AS THOUGH THE SOPRANO GOES FROM BEING 'IN TUNE' WITH THE REST OF THE ENSEMBLE (ESPECIALLY THE PIANO) TO BEING 'OUT OF TUNE' AND BACK AGAIN.
- DUE TO DIFFERENCES IN AESTHETIC APPROACH TO THE TWO SONGS, THE NOTATION OF SYLLABIC RHYTHMS THROUGHOUT THE WORK IS NOT UNIFORM. THE FIRST SONG MAKES USE OF EXTREMELY PRECISE RHYTHMS TO SINGLE OUT INDIVIDUAL SOUNDS WITHIN WORDS. EACH COLLECTION OF LETTERS SHOULD BE PERFORMED AS QUICKLY AS POSSIBLE; FOR INSTANCE THE REALIZATION OF "R̂- U- FEW" SHOULD FOCUS ON THE SOUNDS "R̂," "U," AND "W." THE SECOND SONG SHOULD BE VIEWED AS A MUCH MORE TRADITIONAL TYPE OF TEXT SETTING, WITH THE PRECISE PLACEMENT OF SOUNDS BEING LEFT TO THE PERFORMER'S DISCRETION.
- IN THE FIRST SONG, "R̂" SHOULD BE ROLLED (SOMETIMES SUSTAINED) AND "R" SHOULD NOT. IN THE SECOND SONG THIS IS ALSO LEFT TO THE DISCRETION OF THE PERFORMER.

CLARINET, POINTS OF SPECIAL INTEREST:

- THROUGHOUT THIS PIECE, REED PRESSURE (RESULTING IN DIFFERING AMOUNTS OF PITCH CLARITY) IS USED AS A DECORATIVE PARAMETER. THE FOLLOWING SYMBOLS ARE USED IN THE SCORE.

  ● NORMAL PRESSURE (I.E. PRODUCING PITCHES)

  ○ NO PRESSURE (I.E. THE PITCHES ARE STILL FINGERED BUT THE PERFORMER IS ESSENTIALLY JUST BLOWING AIR THROUGH THE INSTRUMENT)

  ◑ A RELATIVE 'MIDWAY' POINT, NOT QUITE EITHER EXTREME. THIS IS GENERALLY USED WITH A GRADUAL CHANGE OF PRESSURE OVER TIME.

- THE PIECE MAKES USE OF SEVERAL MULTIPHONICS, WITH FINGERINGS ALWAYS APPEARING IN THE SCORE. MANY OF THESE ARE TAKEN FROM PHILLIP REHFELDT'S BOOK "NEW DIRECTIONS FOR CLARINET," UNIVERSITY OF CALIFORNIA PRESS. ADDITIONAL / ALTERNATE FINGERINGS (IN BRACKETS) WERE PROVIDED BY ROBERT ZELICKMAN AT THE UNIVERSITY OF CALIFORNIA, SAN DIEGO.
- THE FOLLOWING SYMBOL IS USED WITH SUSTAINED NOTES TO SIGNIFY THAT THEY SHOULD NOT BE REARTICULATED. WHEN PITCHES ARE INFLECTED MICROTONALLY OVER TIME, THIS HAS THE SAME FUNCTION AS A TIE.

[⟶]

VIOLONCELLO, POINTS OF SPECIAL INTEREST:

- CAREFUL ATTENTION SHOULD BE GIVEN TO THE DIFFERENT TIMBRAL QUALITIES OF NATURAL AND ARTIFICIAL HARMONICS. NATURAL HARMONICS, EVEN WHEN REACHING AS HIGH AS THE 12TH PARTIAL, SHOULD ALWAYS BE VERY CLEAN IN TERMS OF PITCH (THOUGH PRECISE TUNINGS ARE NOT REPRESENTED IN THE SCORE). OFTEN THIS WILL INVOLVE A STRUGGLE BETWEEN THE PERFORMER AND VARIOUS DECORATIVE PARAMETERS SPECIFIED BY THE SCORE — THESE SHOULD, HOWEVER, BE OVERCOME AS EACH GESTURE REACHES ITS PEAK, REVEALING A CLEAR PITCH OR DYAD THAT FADES BACK INTO NOTHINGNESS AS THE GESTURE DECREASES.
- THE FOLLOWING SYMBOLS REPRESENT BOW PRESSURE. IT SHOULD BE NOTED THAT BOW PRESSURE DOES NOT ALWAYS ALIGN WITH CHANGES OF DYNAMIC LEVEL, IN WHICH CASE BOTH TRAJECTORIES MUST BE PRESENTED SIMULTANEOUSLY.

NORMAL PRESSURE

WHISPER PRESSURE

- THE FOLLOWING SYMBOL IS USED WITH SUSTAINED NOTES TO SIGNIFY THAT THE PRESENT BOW DIRECTION SHOULD BE MAINTAINED.

PIANO, POINTS OF SPECIAL INTEREST:

- THREE STATIONS OF THE UNA CORDA PEDAL ARE USED IN THE FIRST SONG. BESIDE THE TWO EXTREMES (PEDAL ENTIRELY DEPRESSED OR ENTIRELY NOT) A MIDDLE POINT SHOULD BE CHOSEN THAT RESULTS IN A QUIET, 'BELL-LIKE' SOUND. THIS WILL BE SLIGHTLY DIFFERENT ON EVERY INSTRUMENT, AND THE EXACT DEFINITION OF THIS TECHNIQUE IS LEFT TO THE DISCRETION OF THE PERFORMER.
- GRACE NOTES HAVE BEEN GIVEN SPECIFIC TUPLET RHYTHMS IN THE SCORE. THE <u>ENTIRE</u> GRACE NOTE FIGURE SHOULD ALWAYS TAKE PLACE DURING THE <u>LAST</u> RHYTHMIC UNIT OF THE TUPLET.
- SPECIAL NOTEHEADS ARE USED IN THE SECOND SONG, AS FOLLOWS:

PLUCK STRING WITH FINGERTIP(S), USING THE SOFT UNDERSIDE (NOT THE FINGERNAIL). I FIND IT WORKS BEST TO USE MY THUMBS.

HAMMER STRING WITH FINGERTIP(S), AGAIN USING THE SOFT UNDERSIDE. THIS IS BEST ACCOMPLISHED WITH A SNAPPING WRIST MOTION.

STRIKE (HAMMER) STRING WITH FINGERNAIL(S). THE THUMBS MIGHT BE USED AS SNAPPING DEVICES TO ENSURE RHYTHMIC ACCURACY.

REGARDING THE WORK

- "ZUM EINSCHLAFEN ZU SAGEN" AND "WITIALE" ARE TAKEN FROM THE COLLECTION OF POEMS BY RAINER MARIA RILKE ENTITLED "DAS BUCH DER BILDER." THEY ARE SET IN THE ORIGINAL GERMAN. FOR A RELIABLE AND ELEGANT VERSION IN ENGLISH, SEE EDWARD SNOW'S TRANSLATION, "THE BOOK OF IMAGES," PUBLISHED BY NORTH POINT PRESS.
- EVERY EFFORT SHOULD BE MADE TO PRESENT PERFORMANCES OF THIS WORK IN AS QUIET AND INTIMATE A SETTING AS POSSIBLE.
- EVERYTHING SHOULD ALWAYS BE VERY DELICATE.

N.1 ZUM EINSCHLAFEN ZU SAGEN

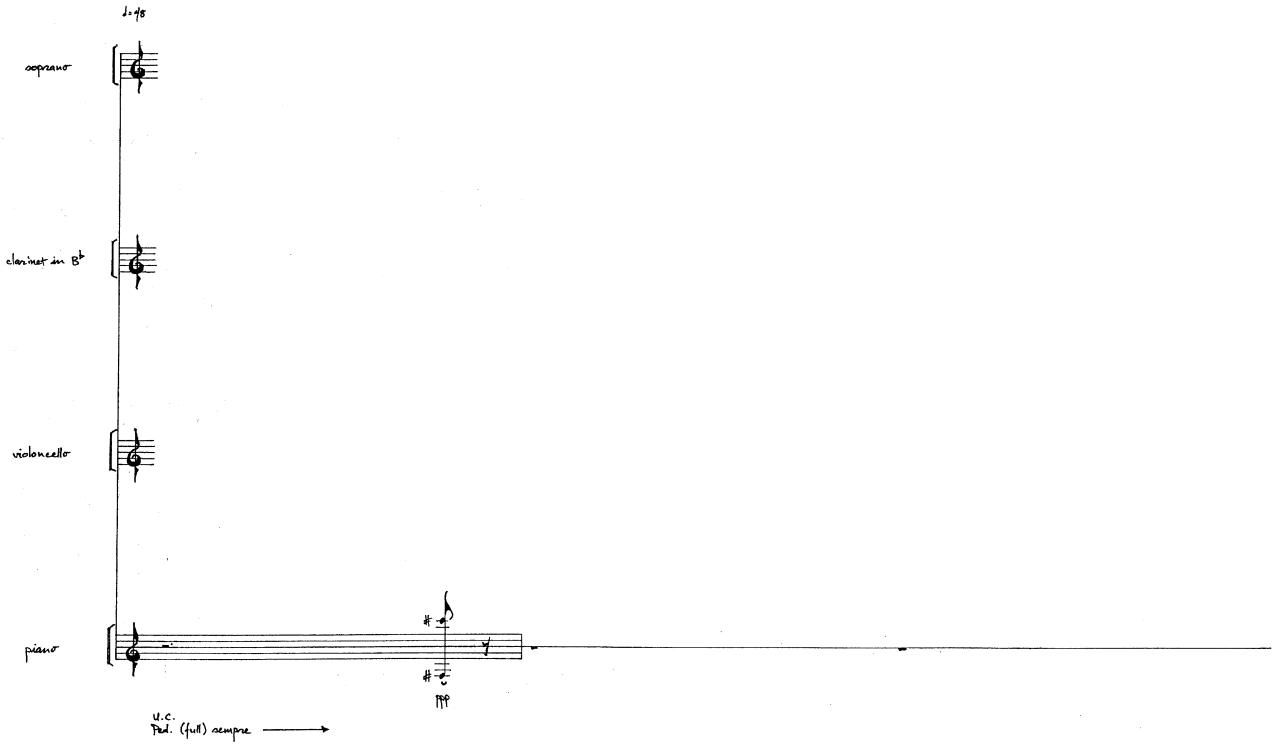

©COPYRIGHT 2007 DANIEL J. TACKE – ALL RIGHTS RESERVED

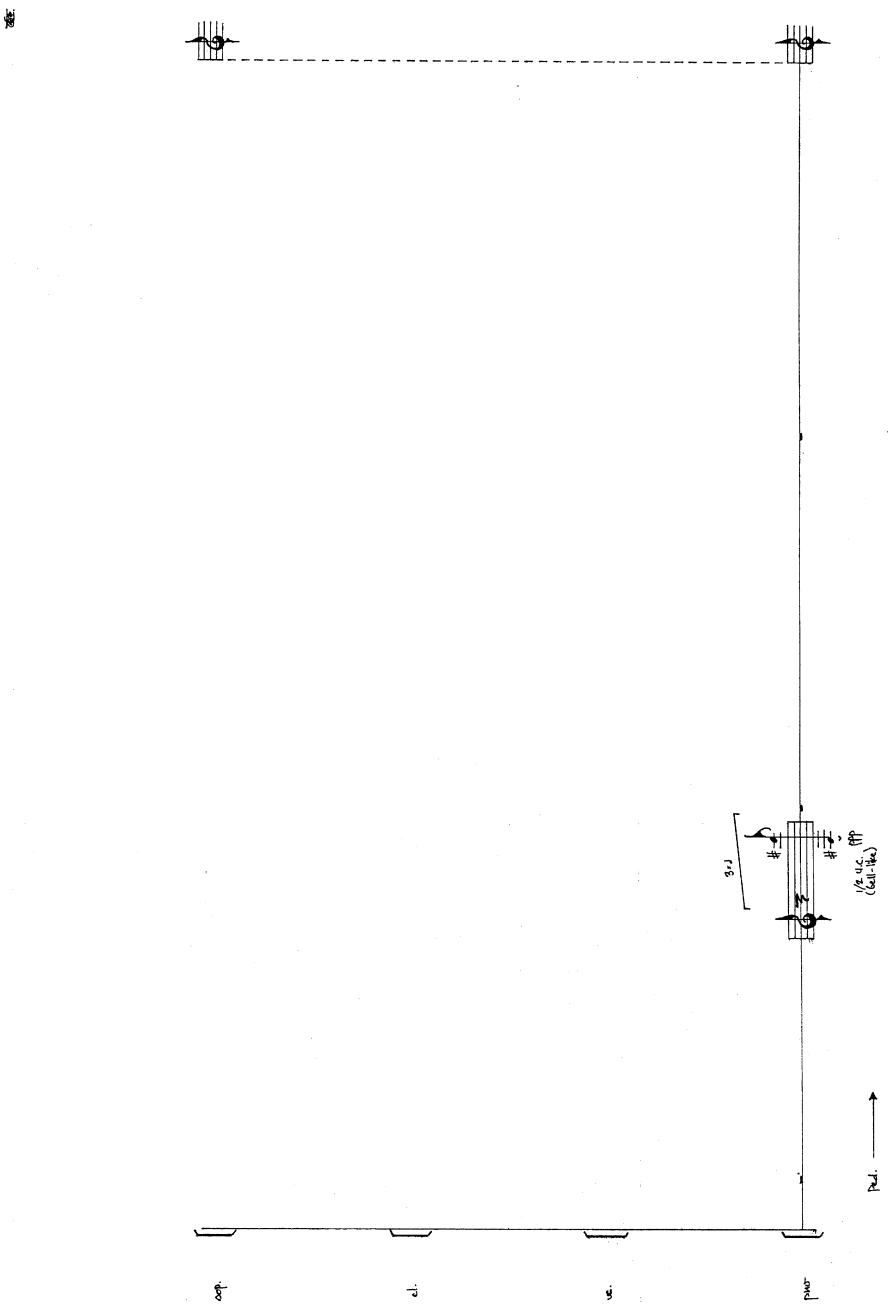

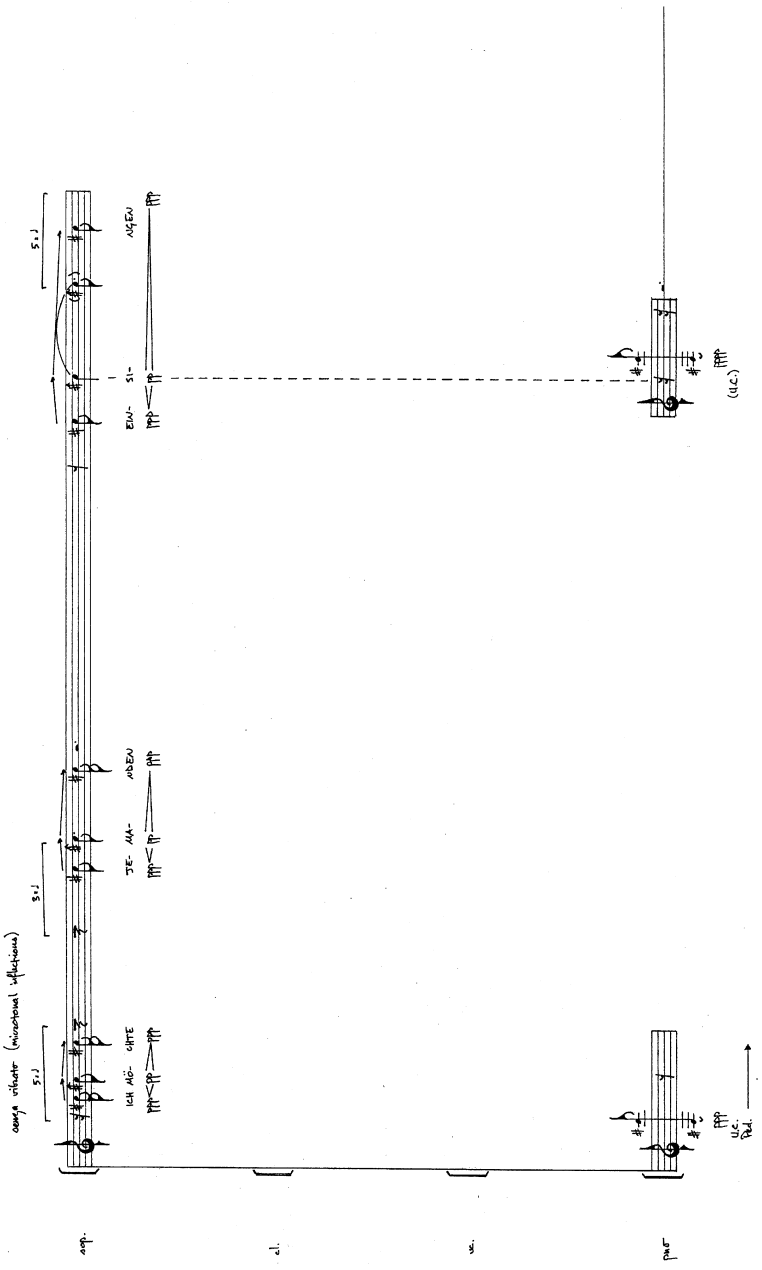

ICH MÖ- CHTE
JE- MA- NDEN
EIN- SI- NGEN
(U.C.)
U.C.
Ped.

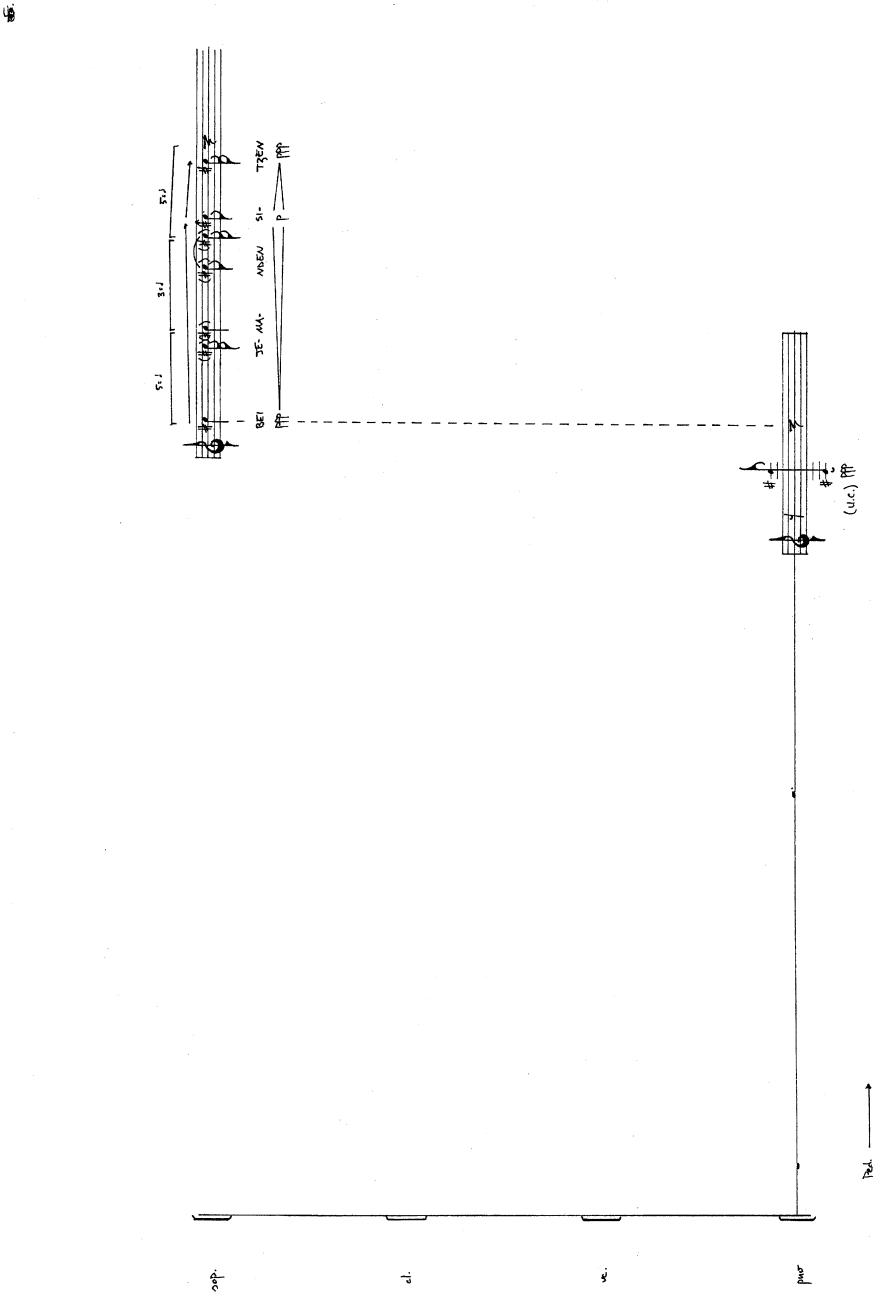
(u.c.)
Ped.

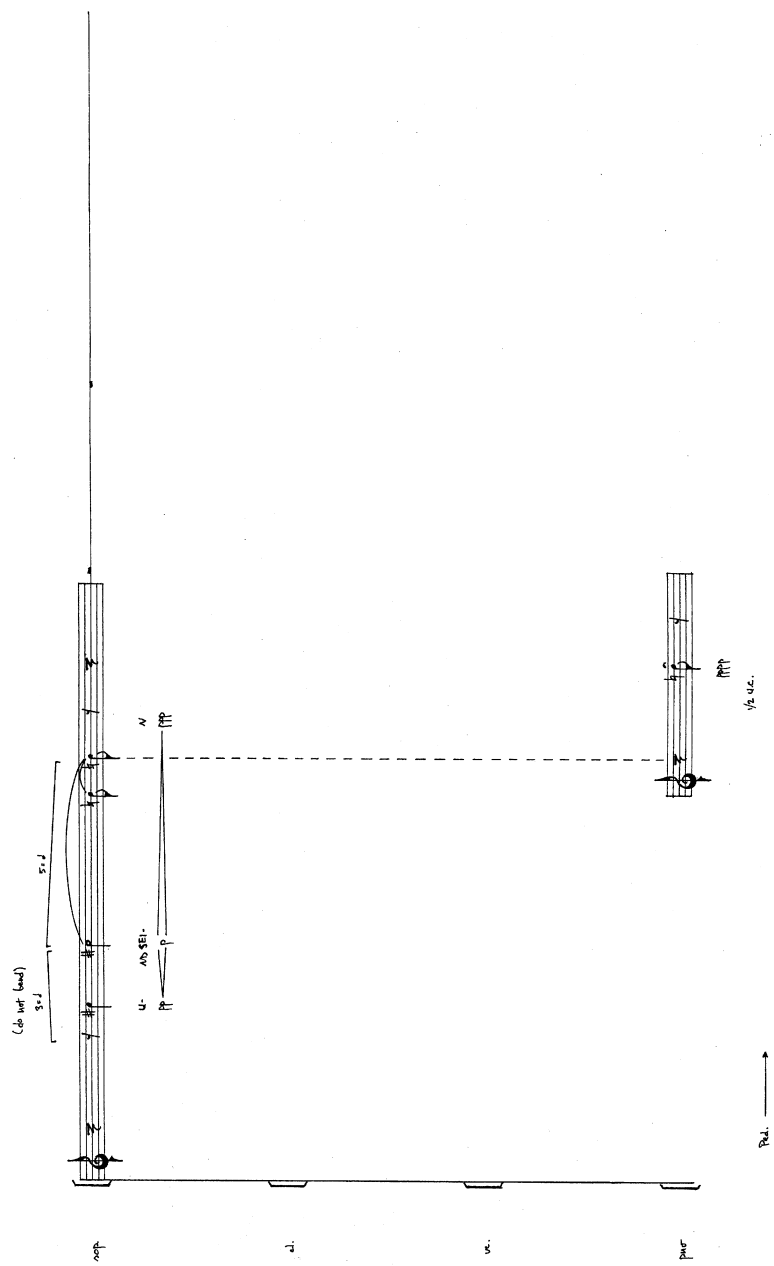
(do not bend)
5 d
5 d
1/2 u.c.
Ped.

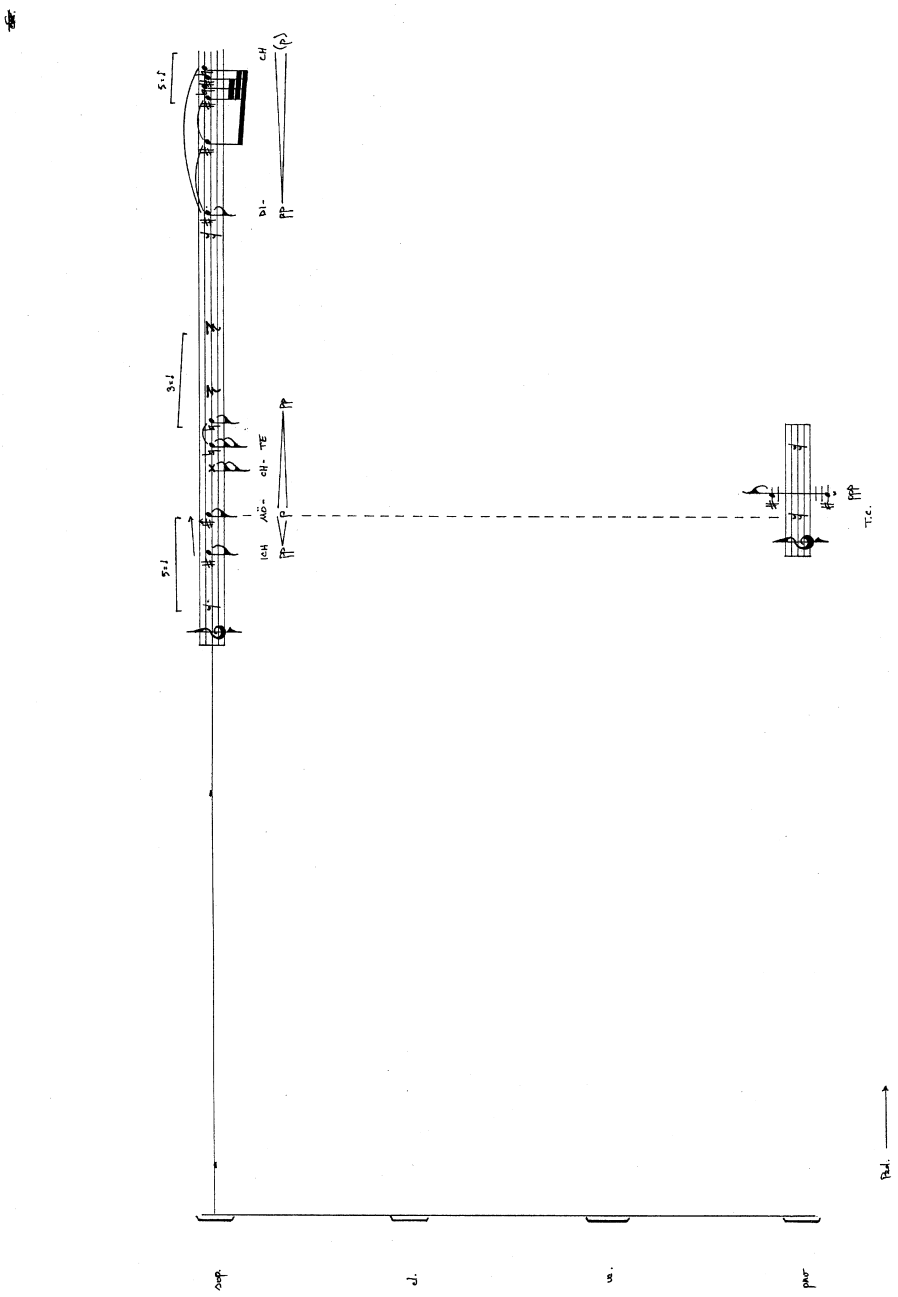

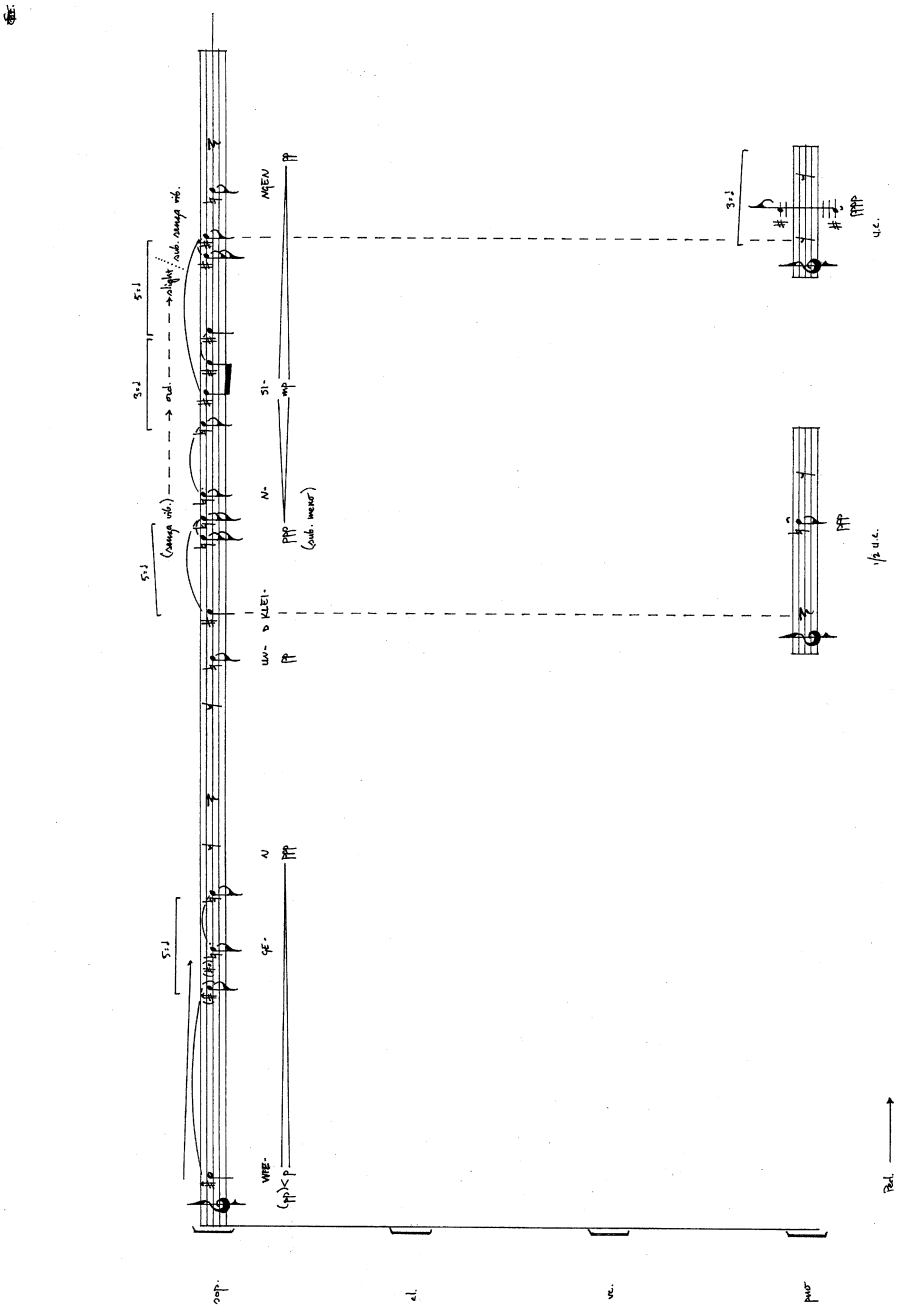

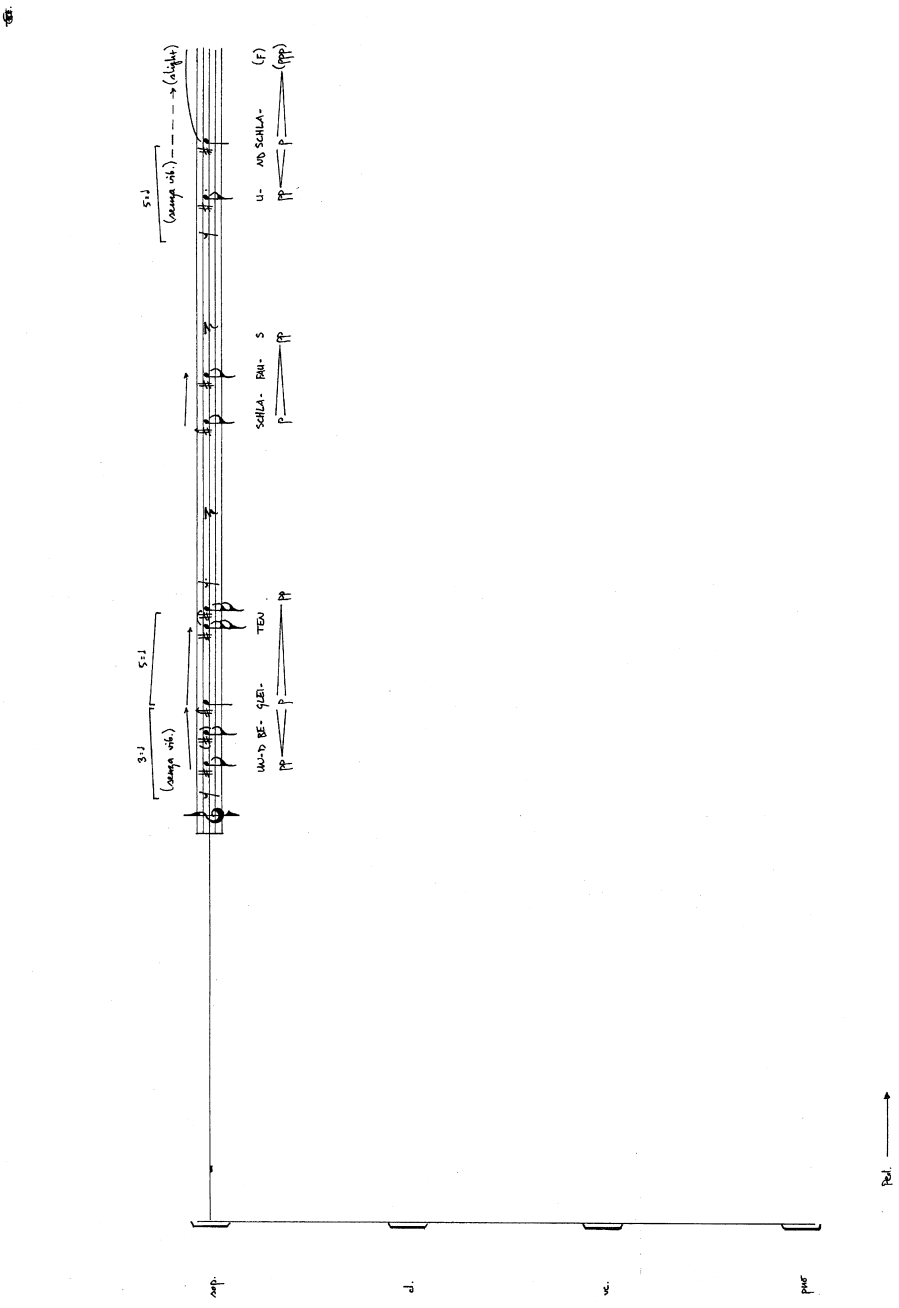
3:1
(senza vib.)
5:1
UN-D BE- GLEI- TEN
pp p pp
SCHLA- RAU- S
p pp
5:1
(senza vib.)
(alight)
U- ND SCHLA- (F)
pp p (ppp)
Ped.

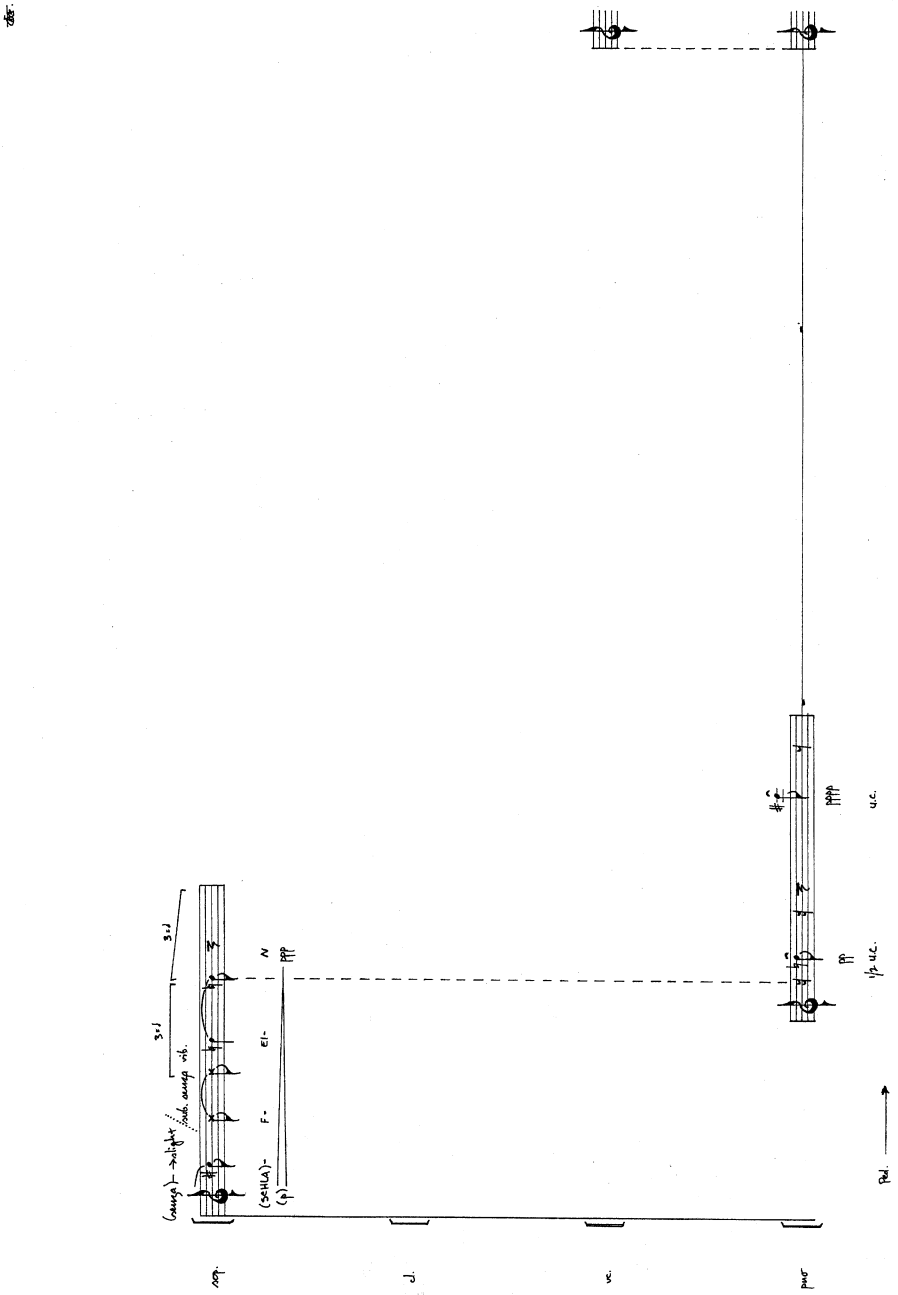
(sauga)- → slight
sub. sauga vib.
3:1
3:1
(SCHLA)-
(p)
F-
El-
N
ppp
pp
1/2 u.c.
pppp
u.c.
Pol.

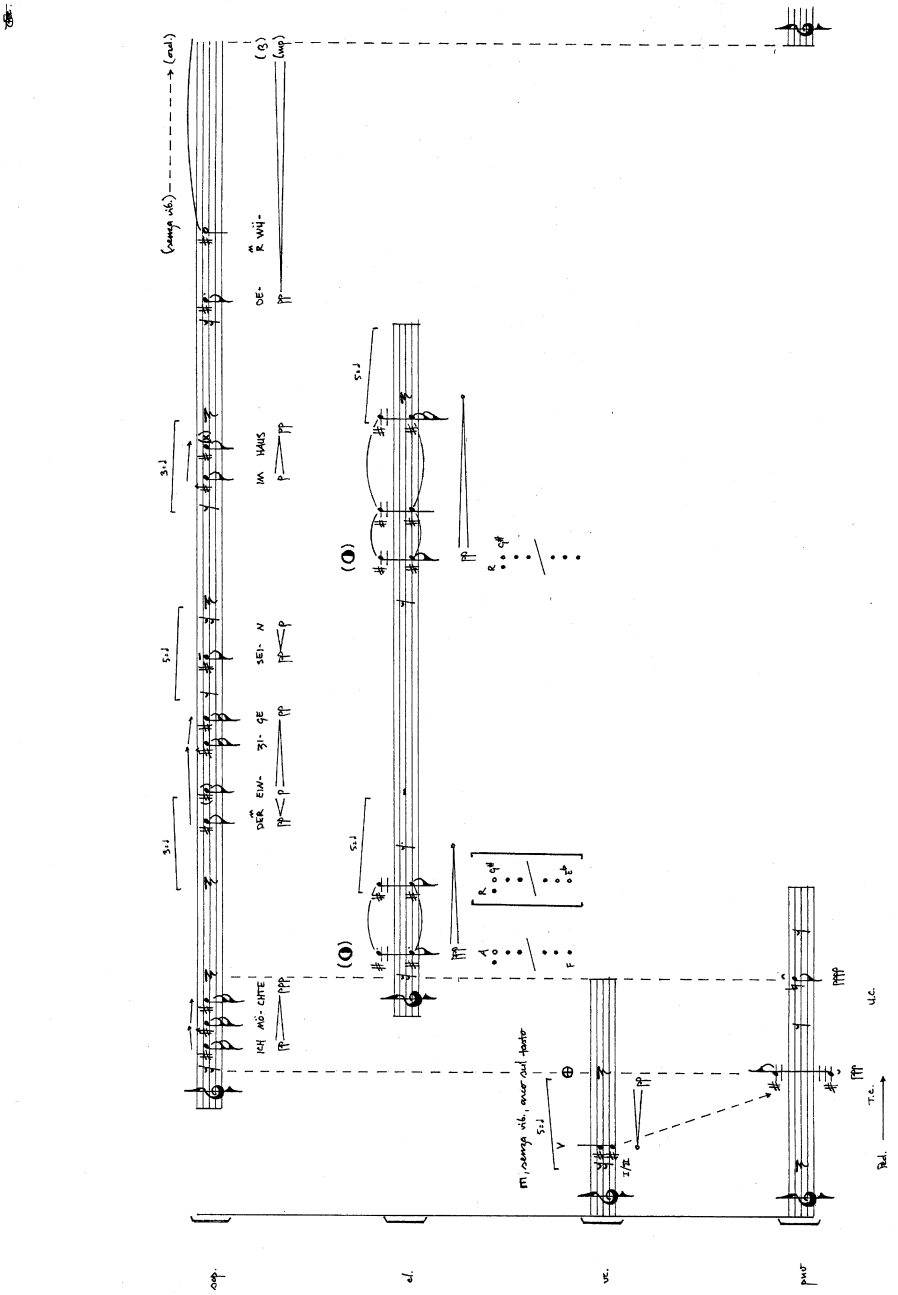
(senza vib.)
(ord.)
ICH MÖ- CHTE
DER EIN- ZI- GE
SEI- N
IM HAUS
DE- R WÜ-
(B)
(mp)
sop.
el.
vc.
pno
T.c.
U.c.
Ped.

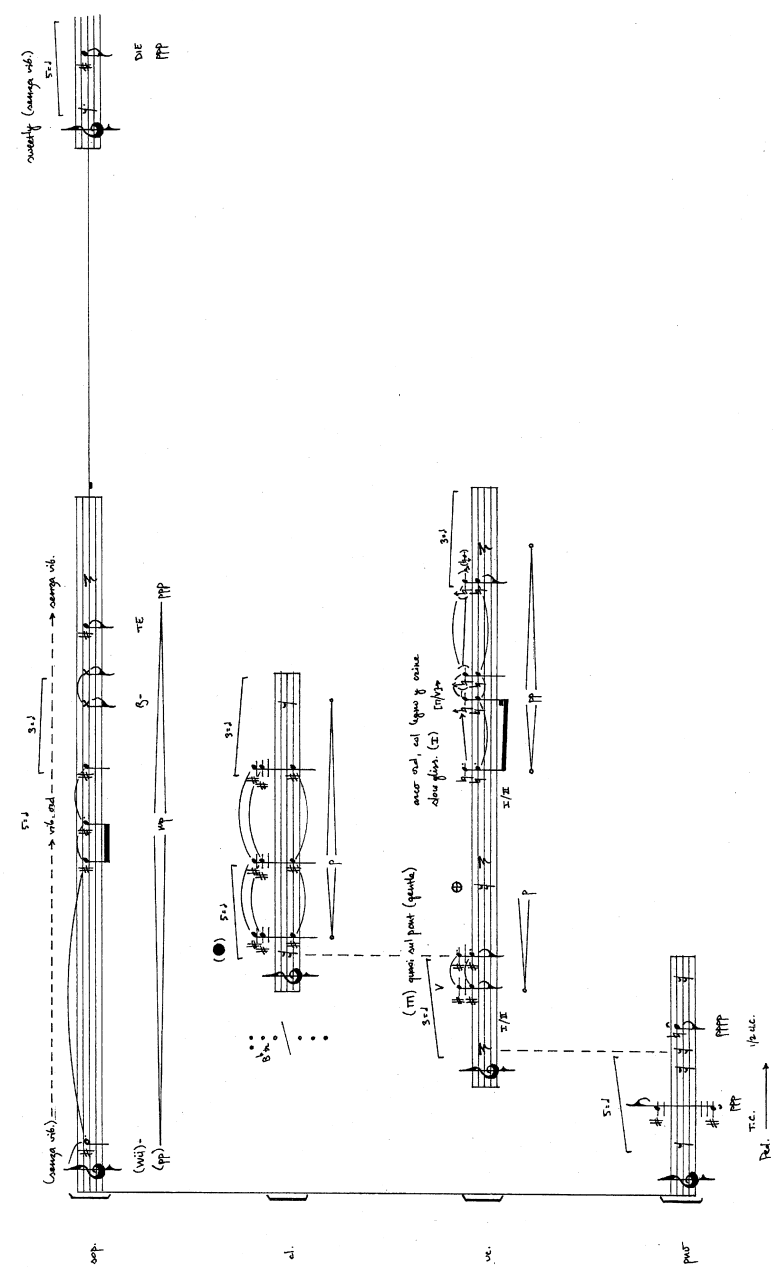

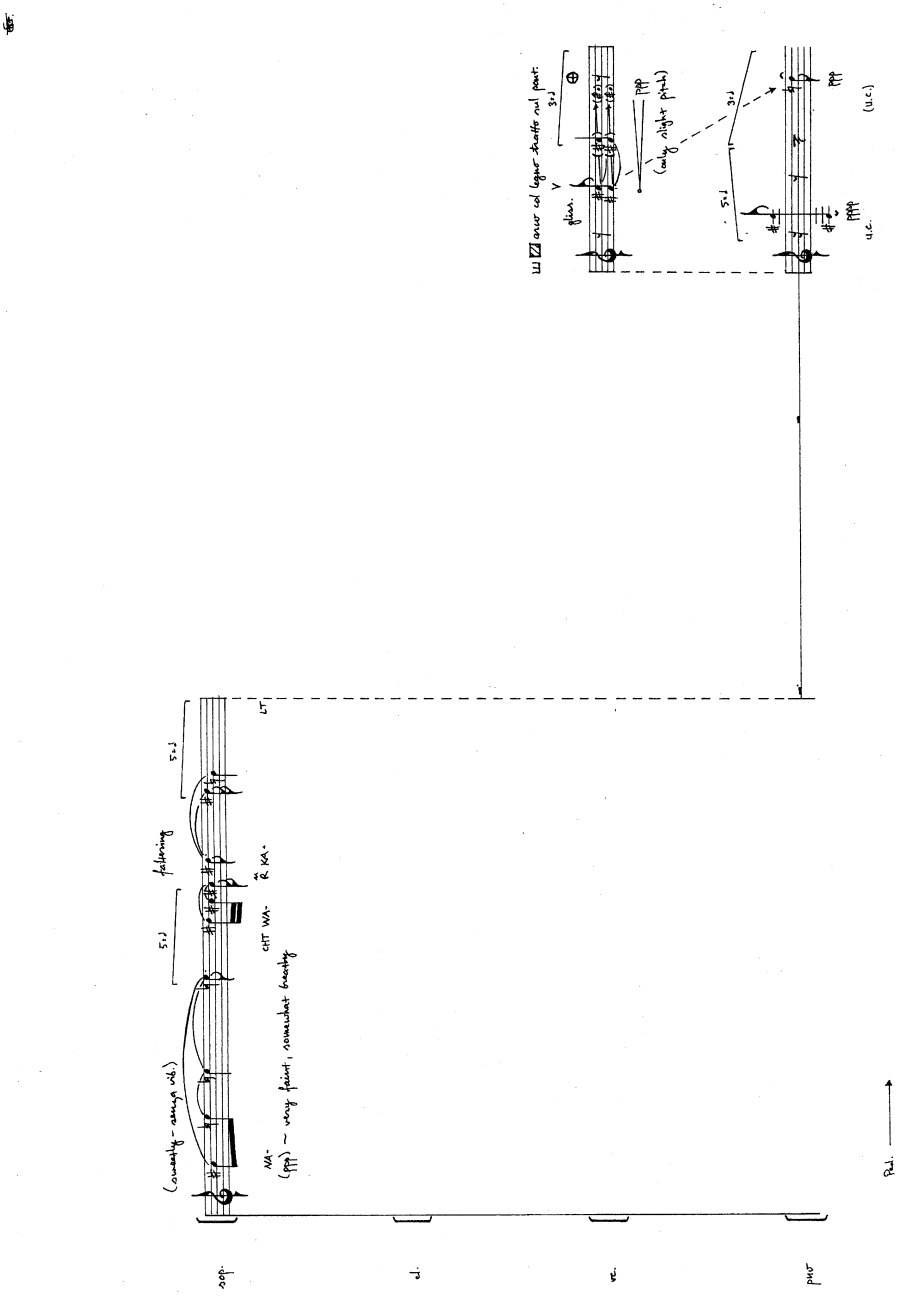

sop.
el.
re.
pho
(sweaty - senza vib.)
5:1
falsing
5:1
NA-
(ppp) ~ very faint, somewhat breathy
CHT WA-
R̂ KA-
LT
arco col legno tratto sul pont.
3:1
glass.
(only slight pitch)
5:1
3:1
ppp
ppp
ppp
u.c.
(u.c.)
Ped.

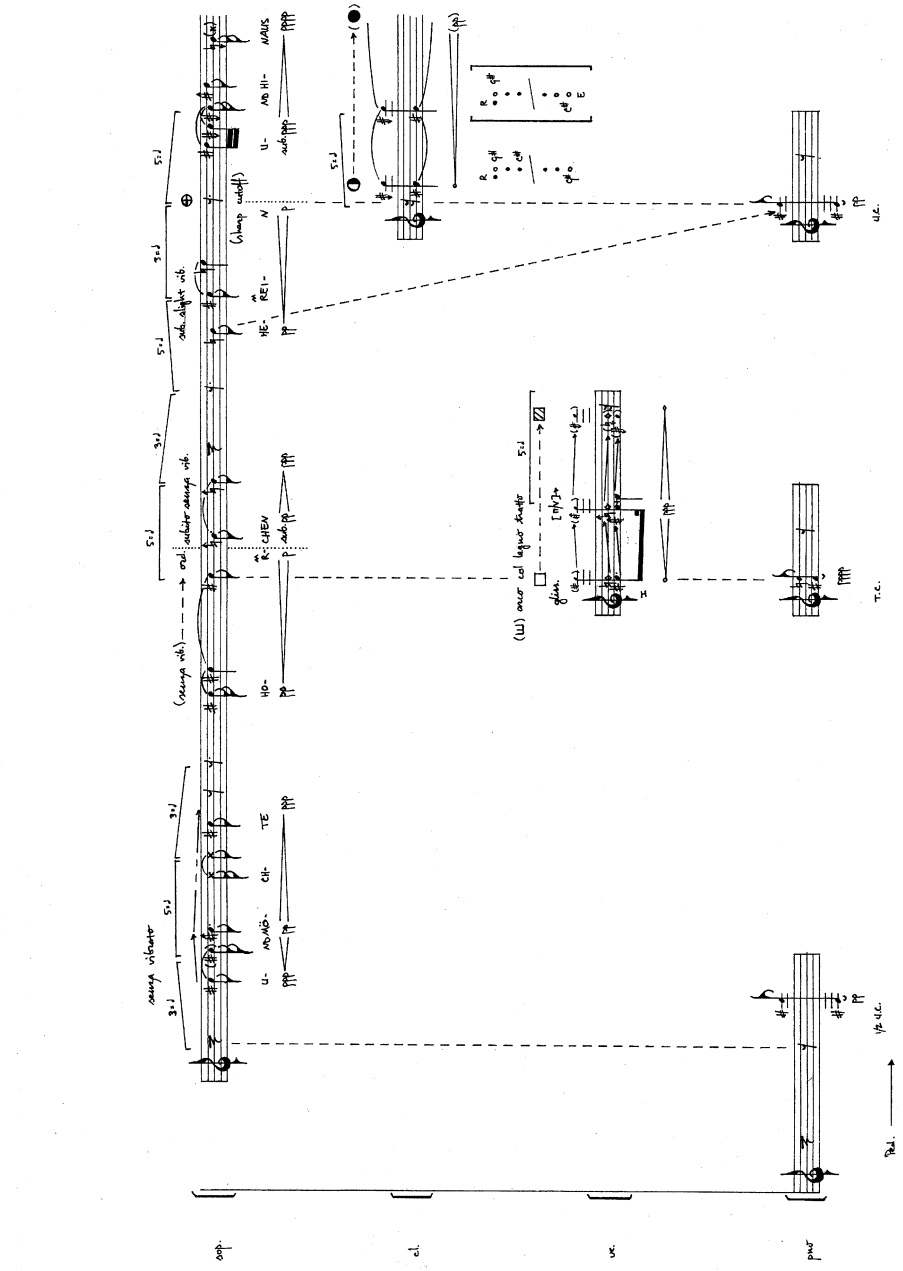

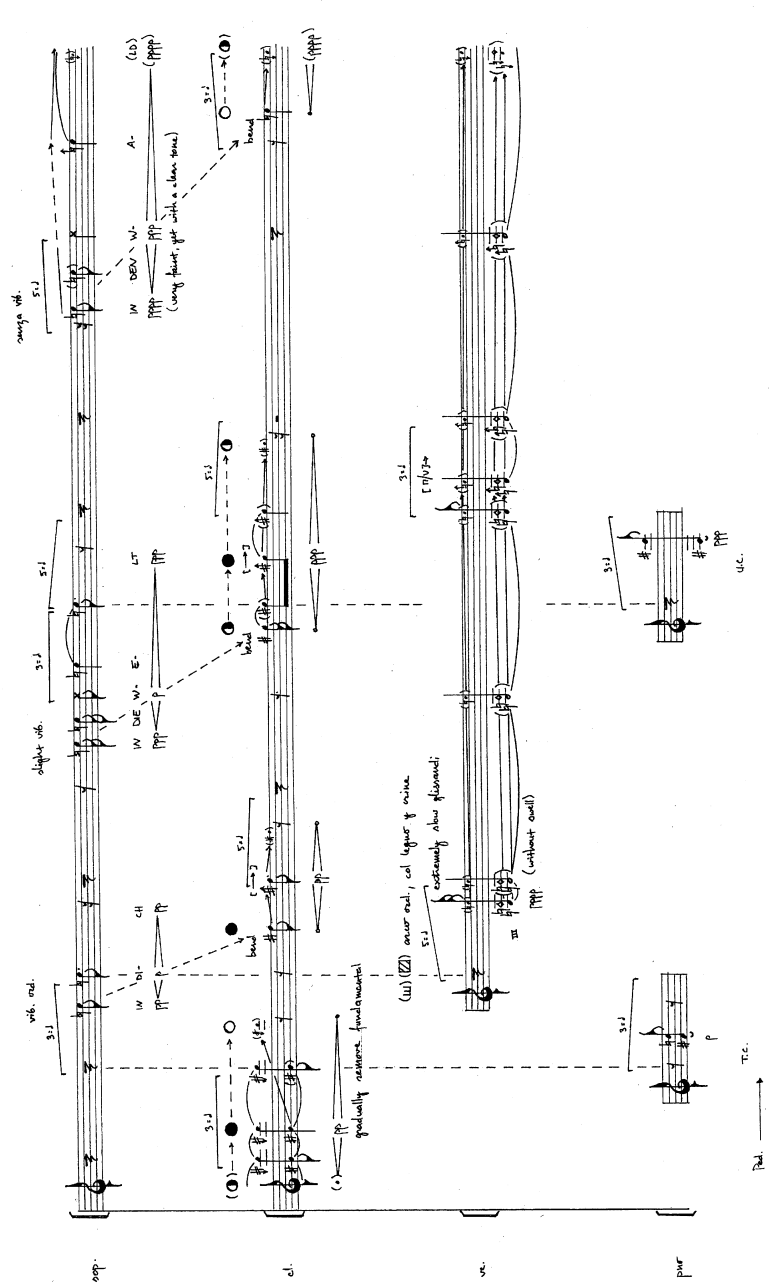
sop.
el.
ve.
pwr
vib. ord.
slight vib.
senza vib.
IN DI- CH
IN DIE W- E-
IN DEV W- A-
(very faint, yet with a clear tone)
bend
gradually remove fundamental
arco ord., col legno y crine
extremely slow glissandi
(without swell)
T.C.
U.C.
Ped.

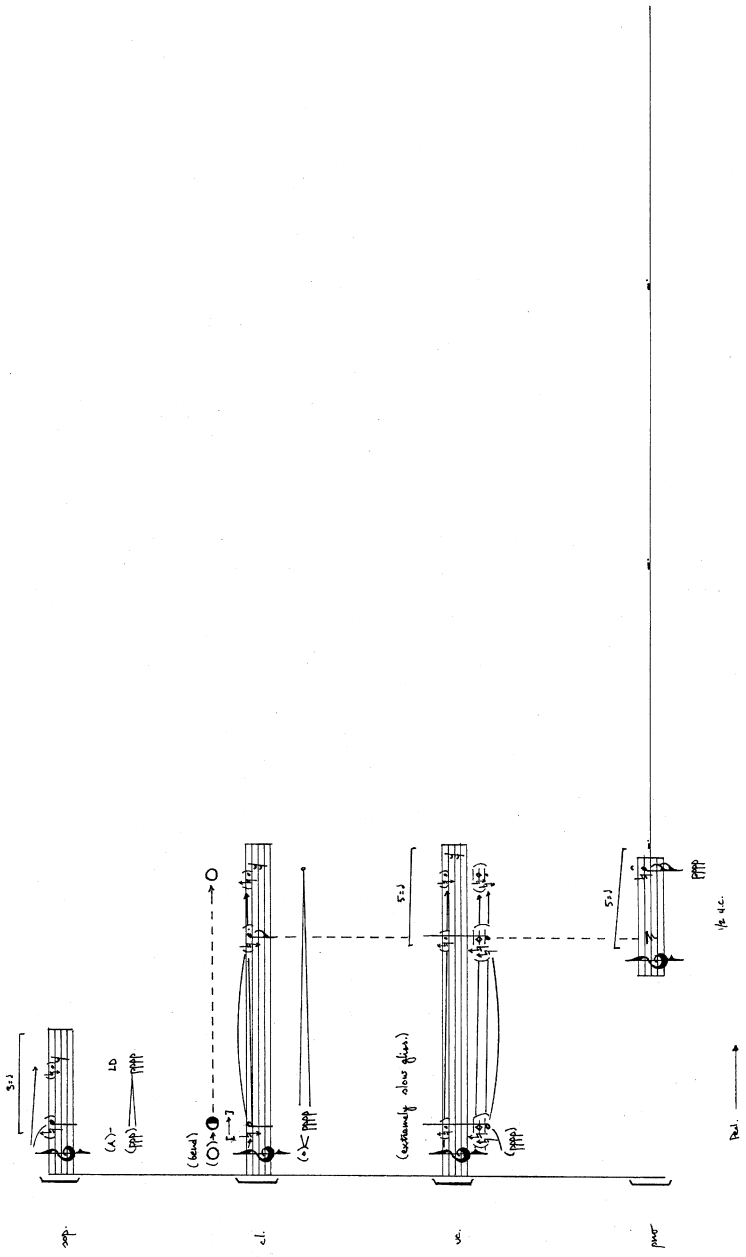

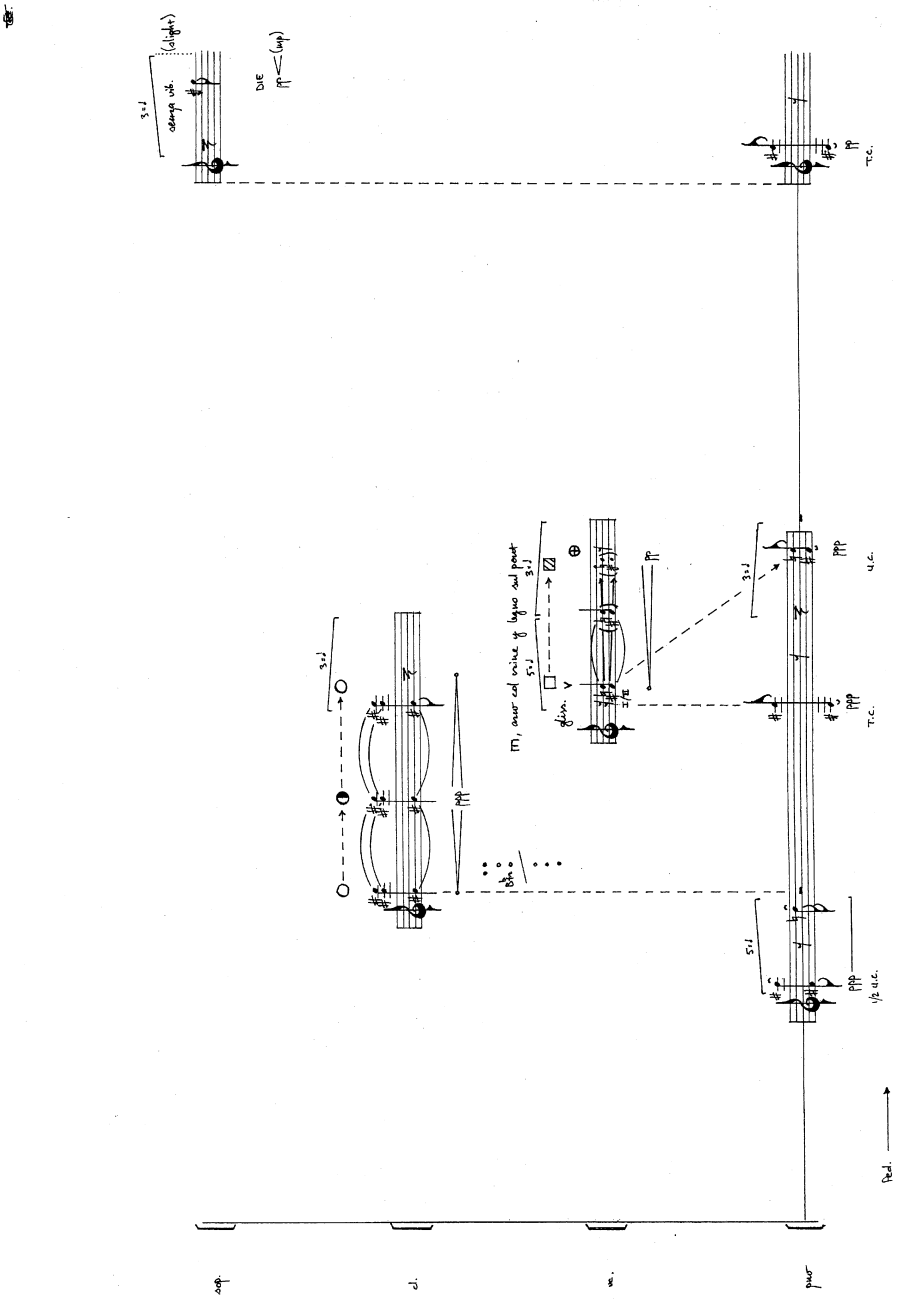

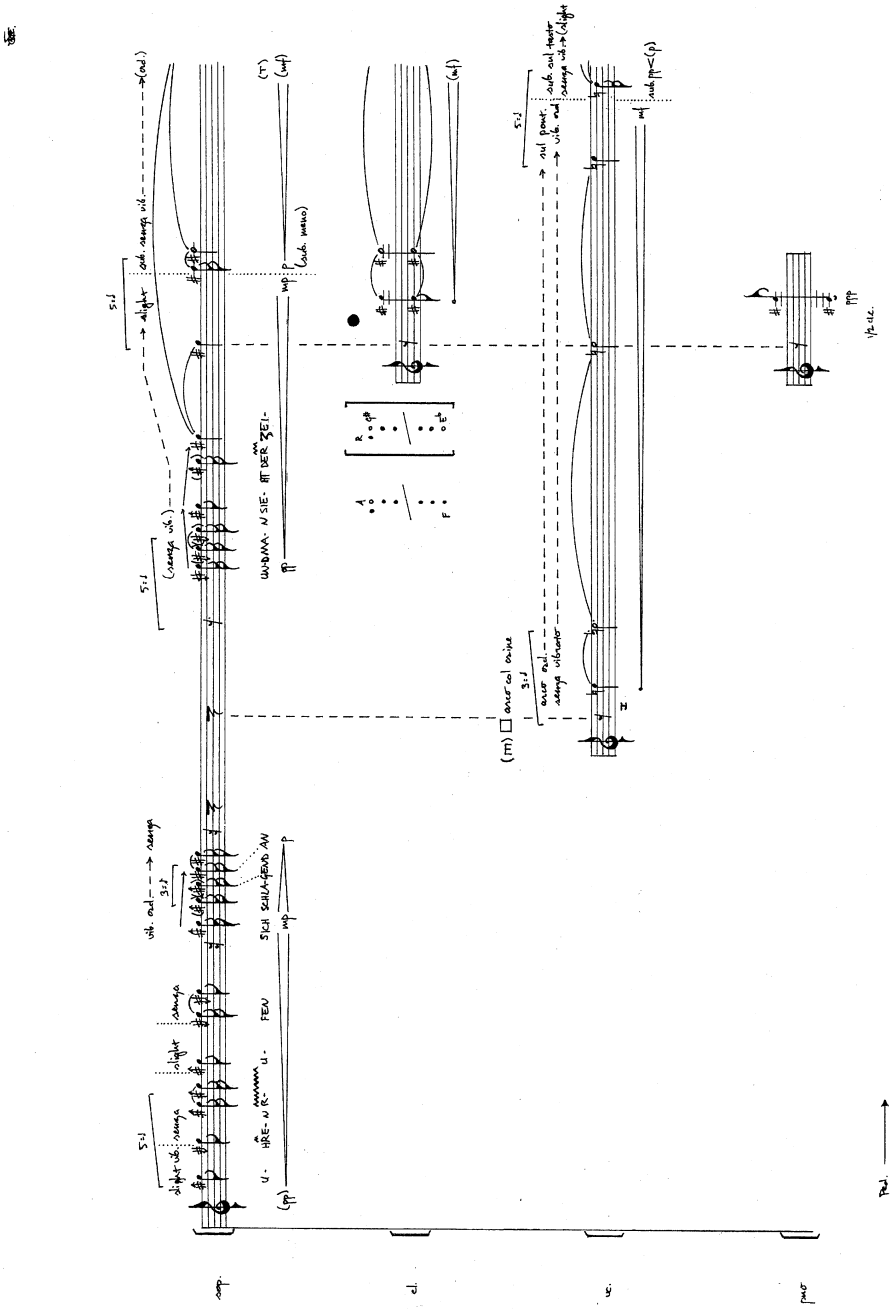

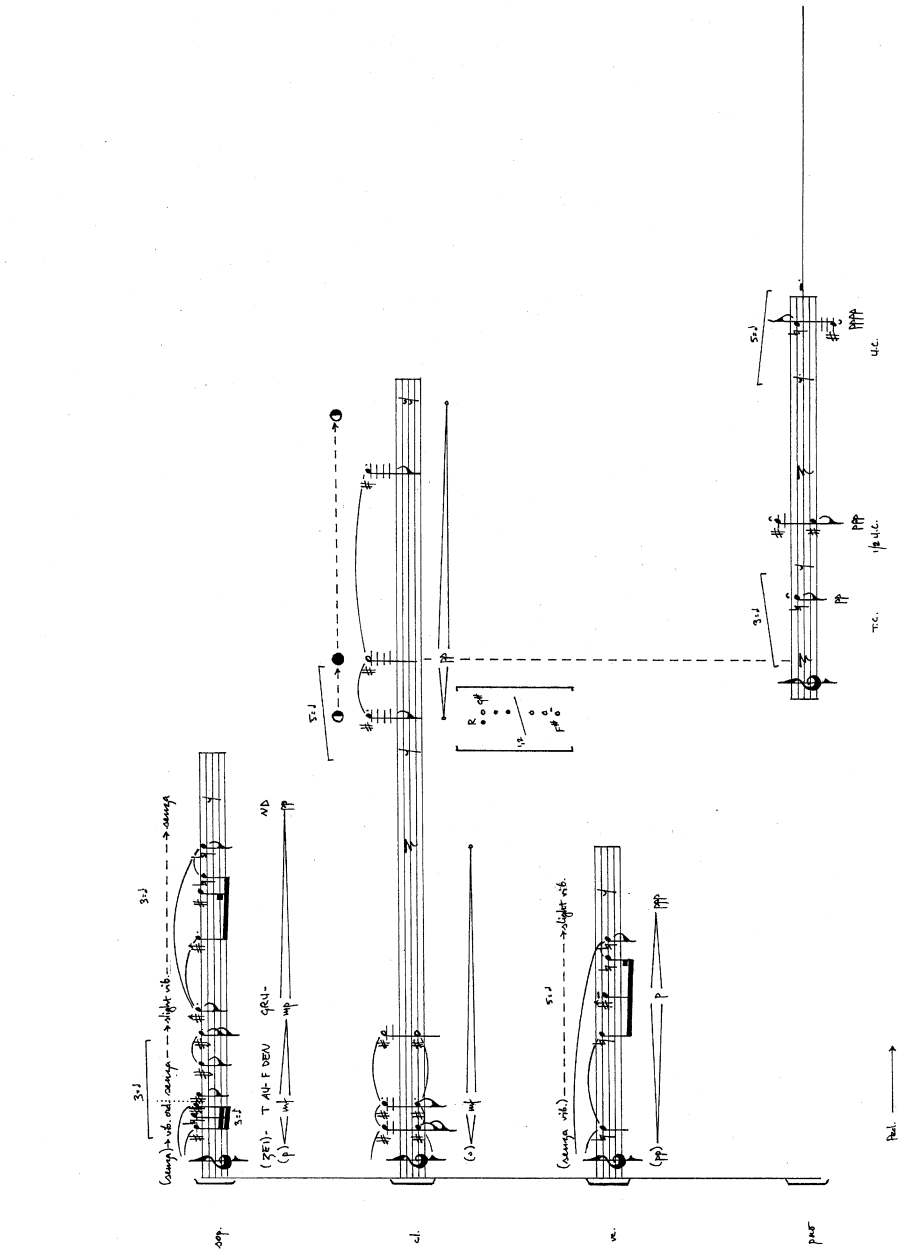

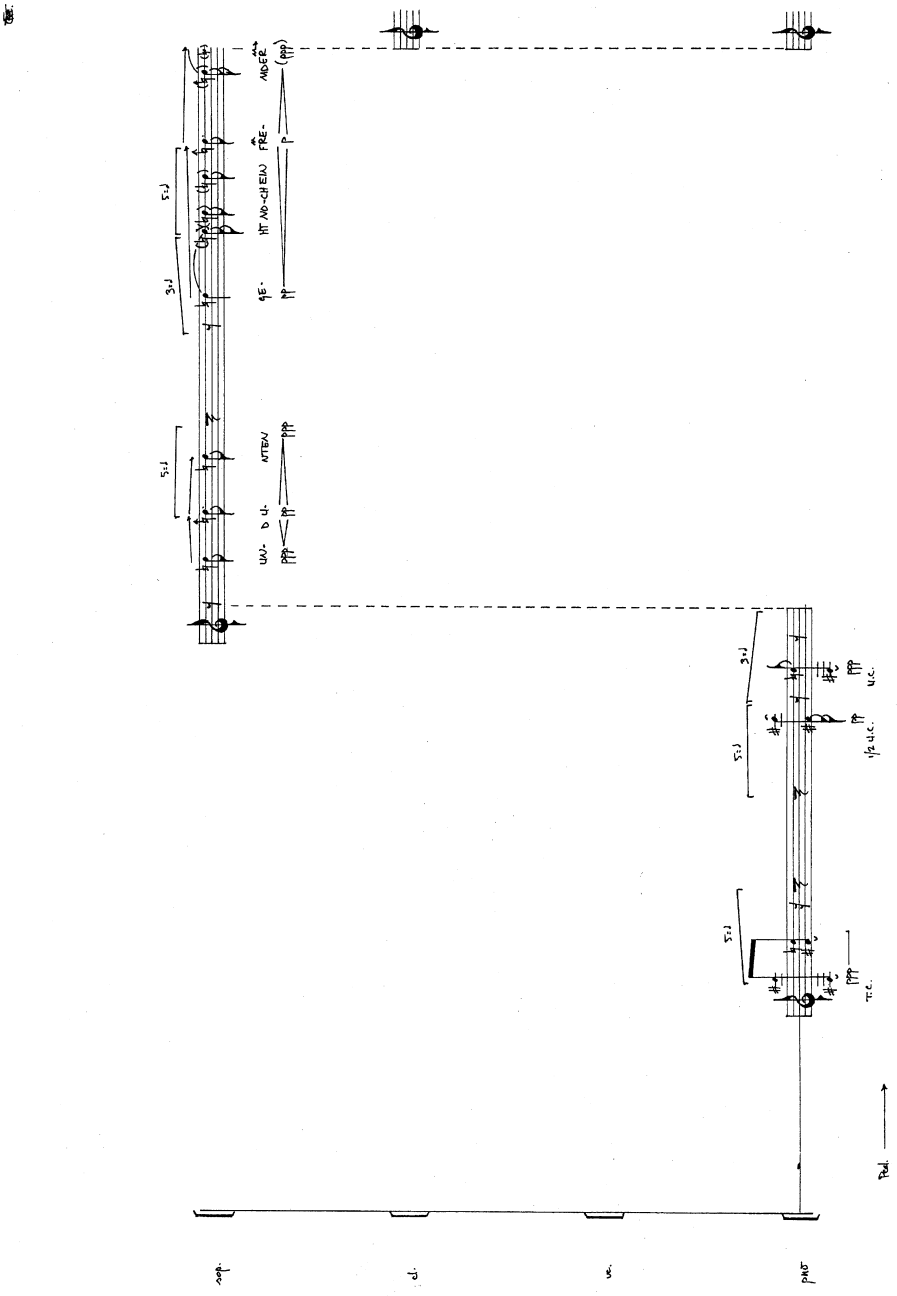
Ped.

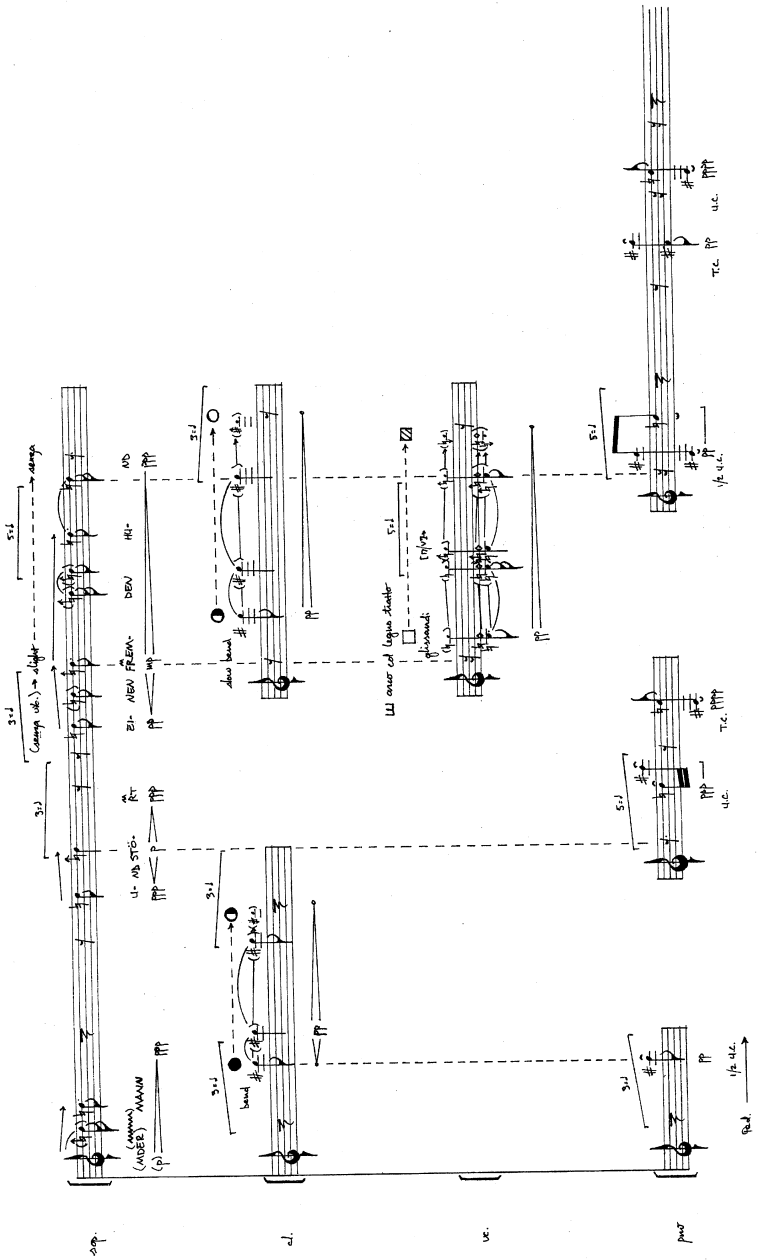

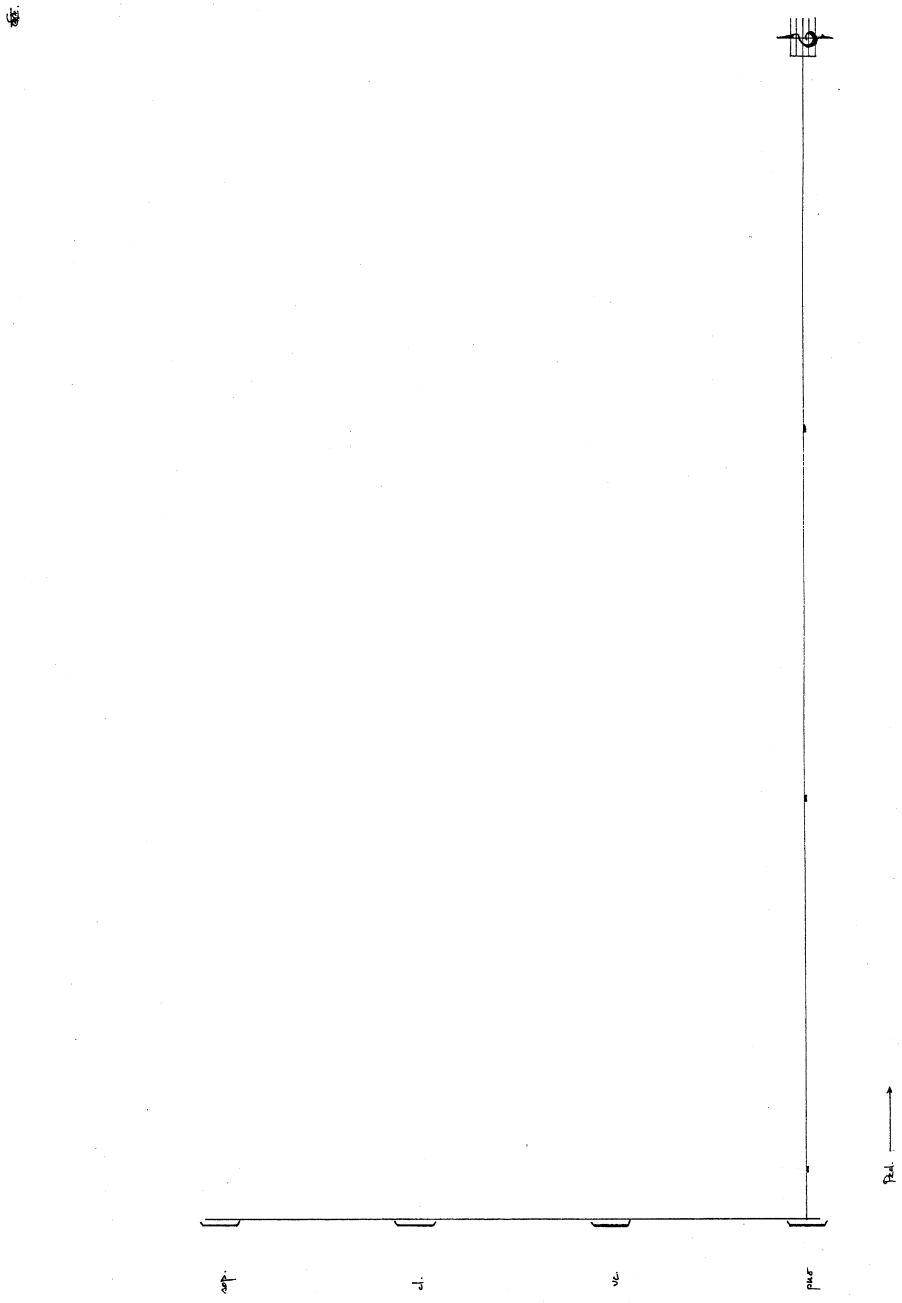

sop.
cl.
vc.
pno

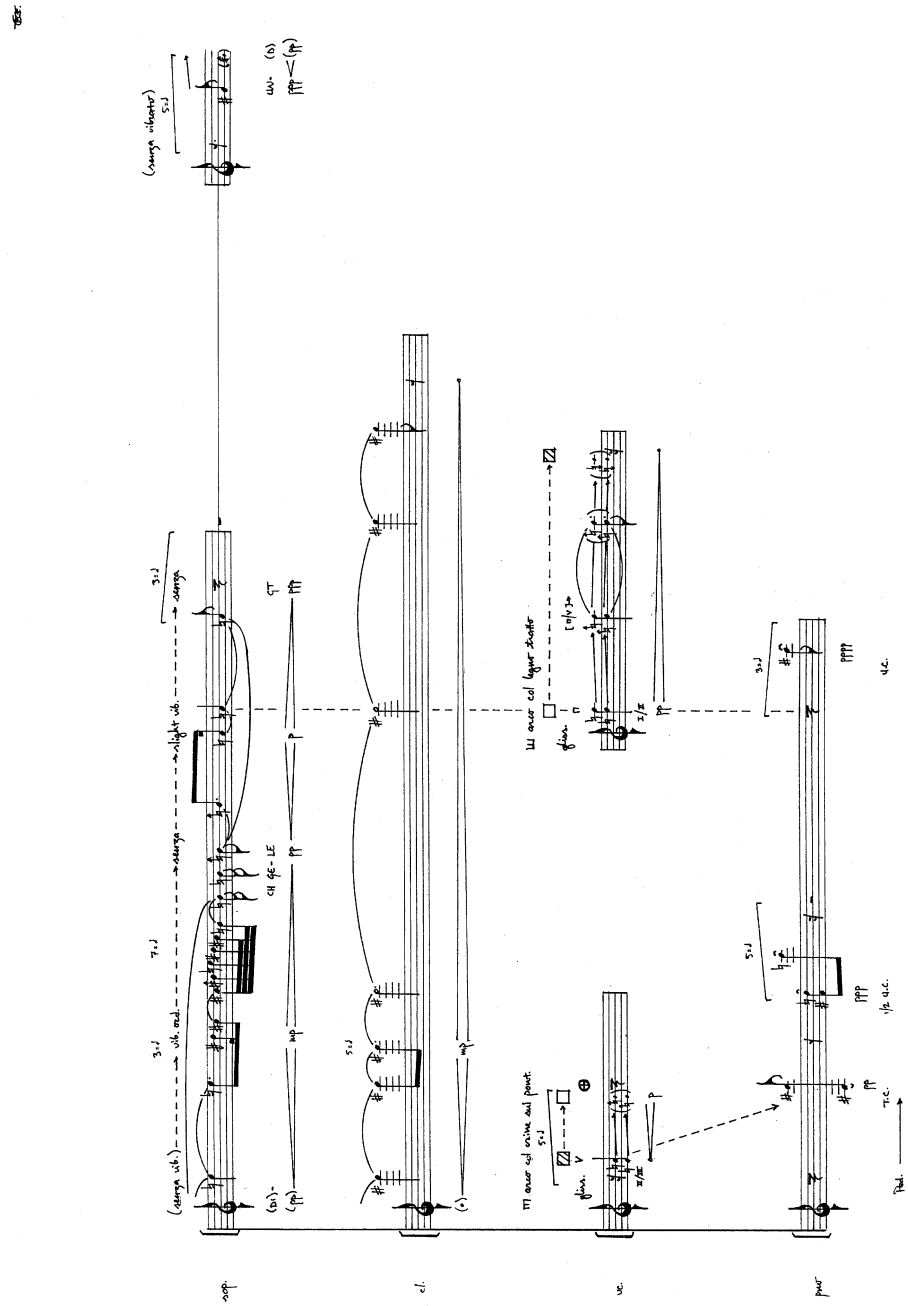

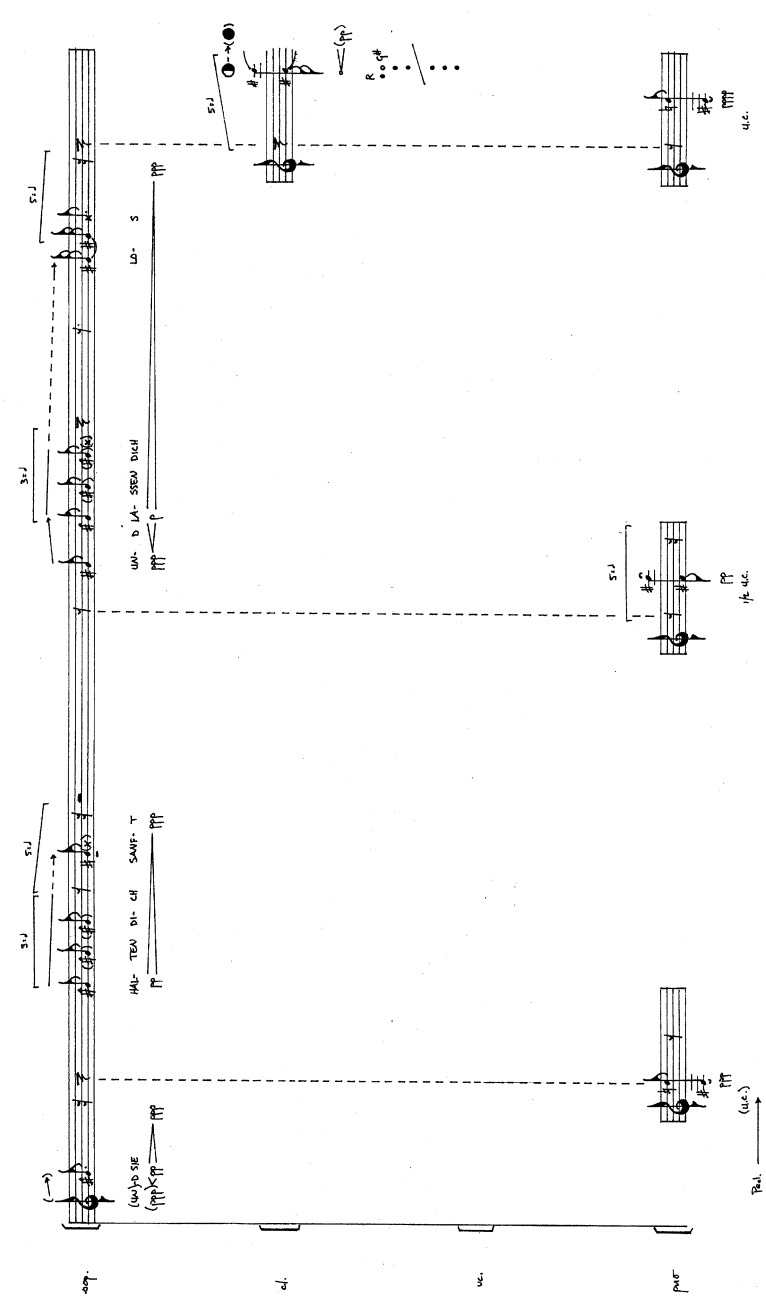

(UN)-D SIE
HAL- TEN DI- CH SANF- T
UN- D LA- SSEN DICH
LO- S
3:J
5:J
u.c.
1/2 u.c.
Ped.

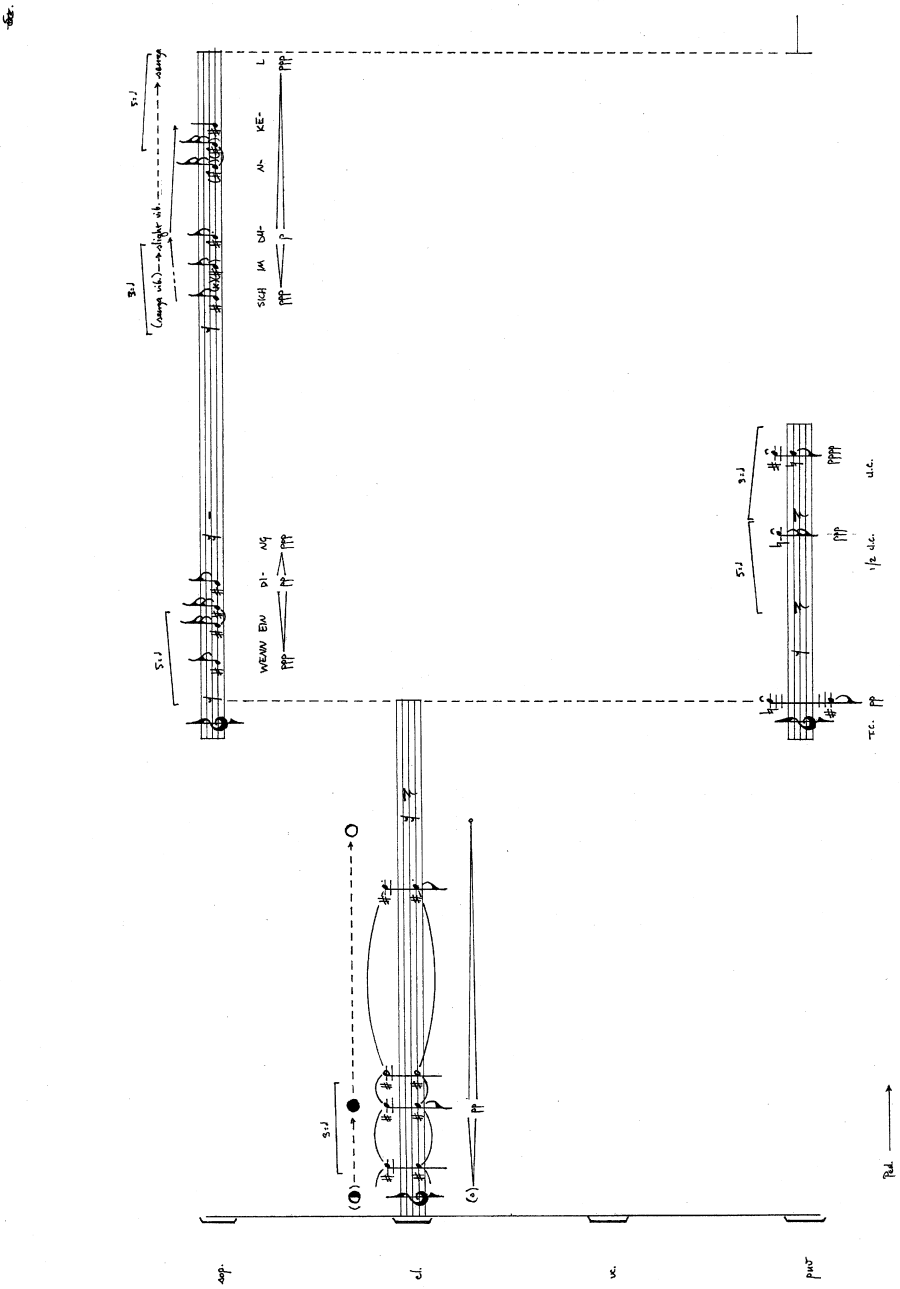

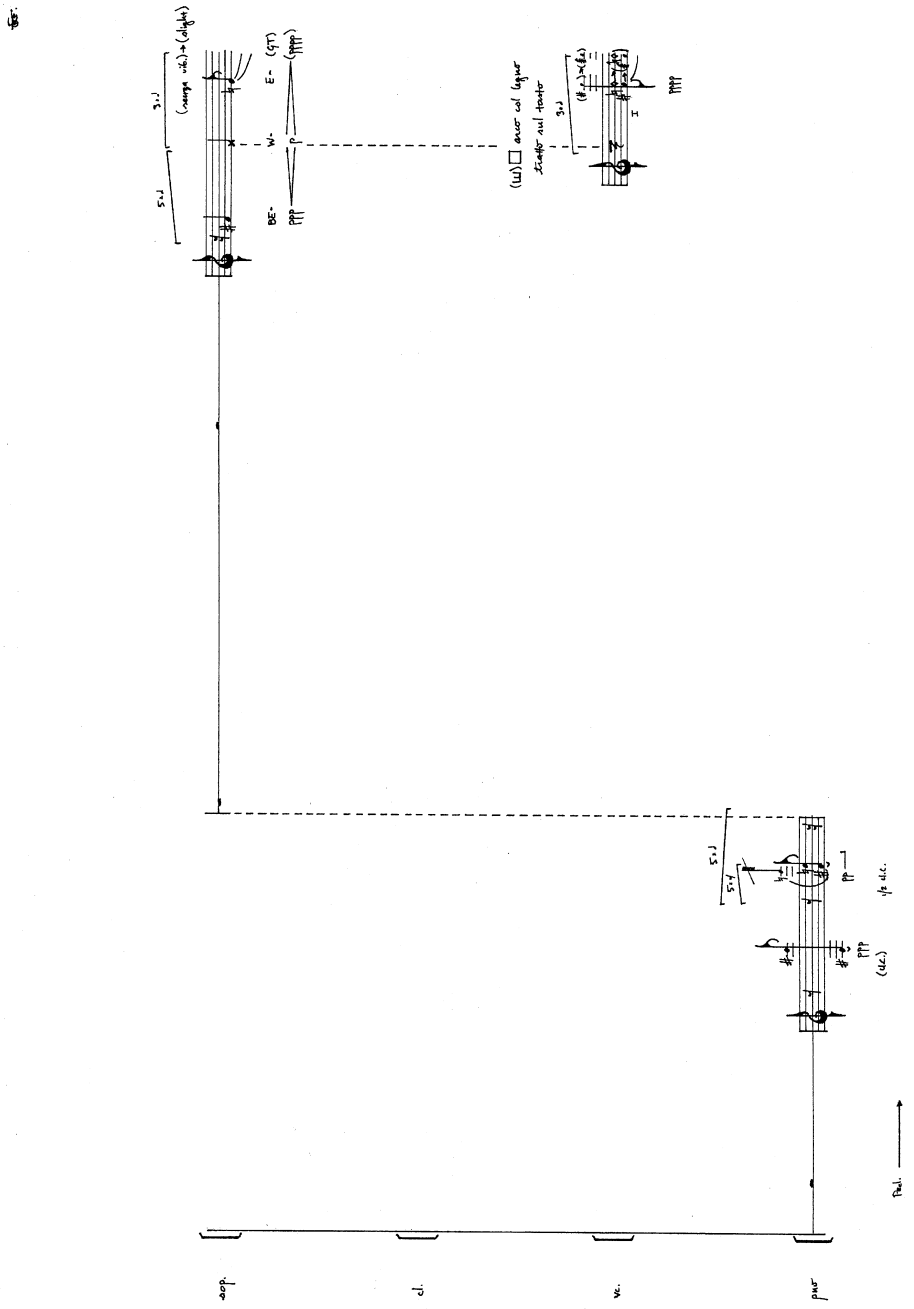

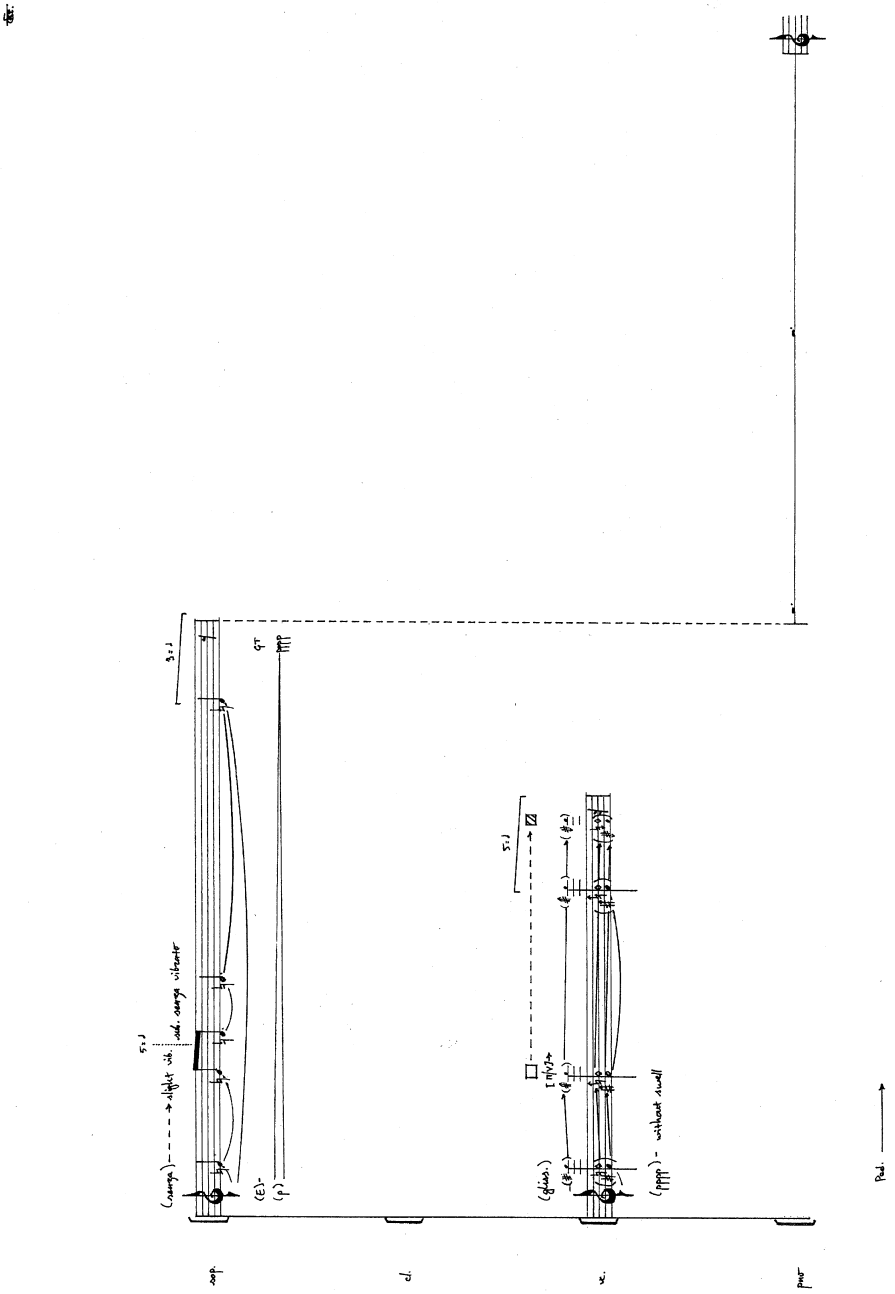

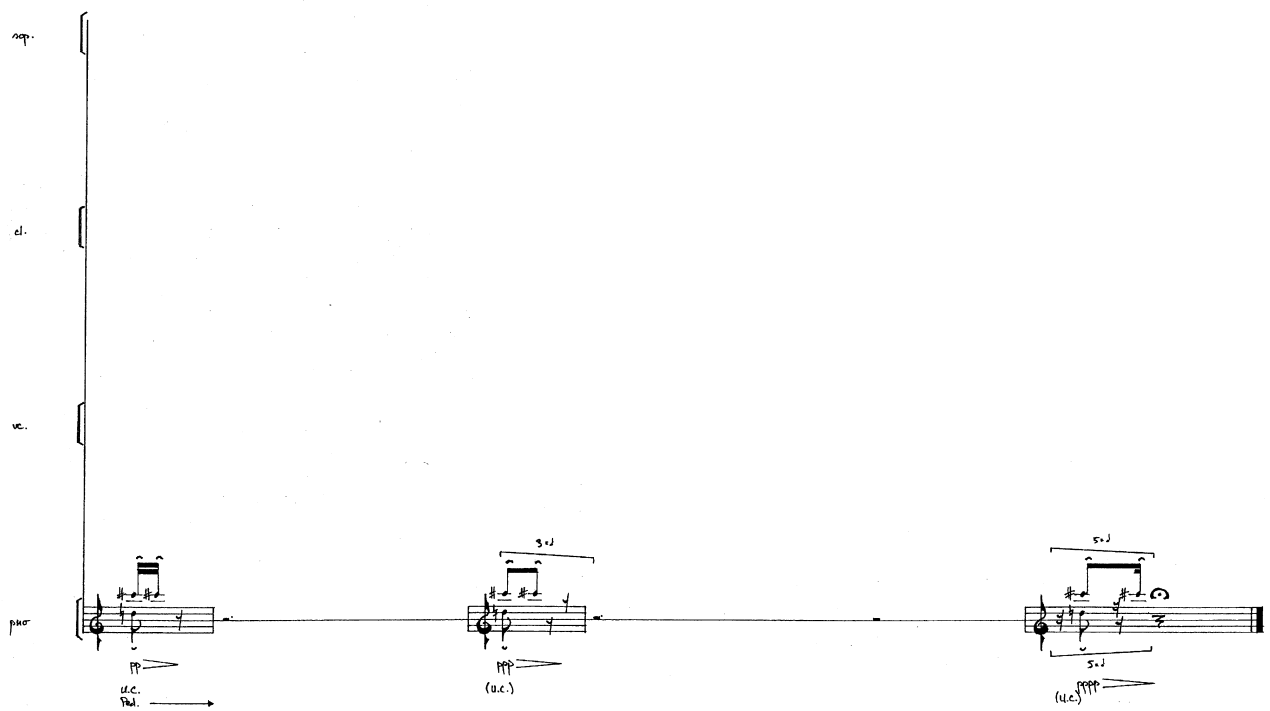

Allow sound to fade completely, yet hang suspended.

ATTACCA

N.2 WITULE

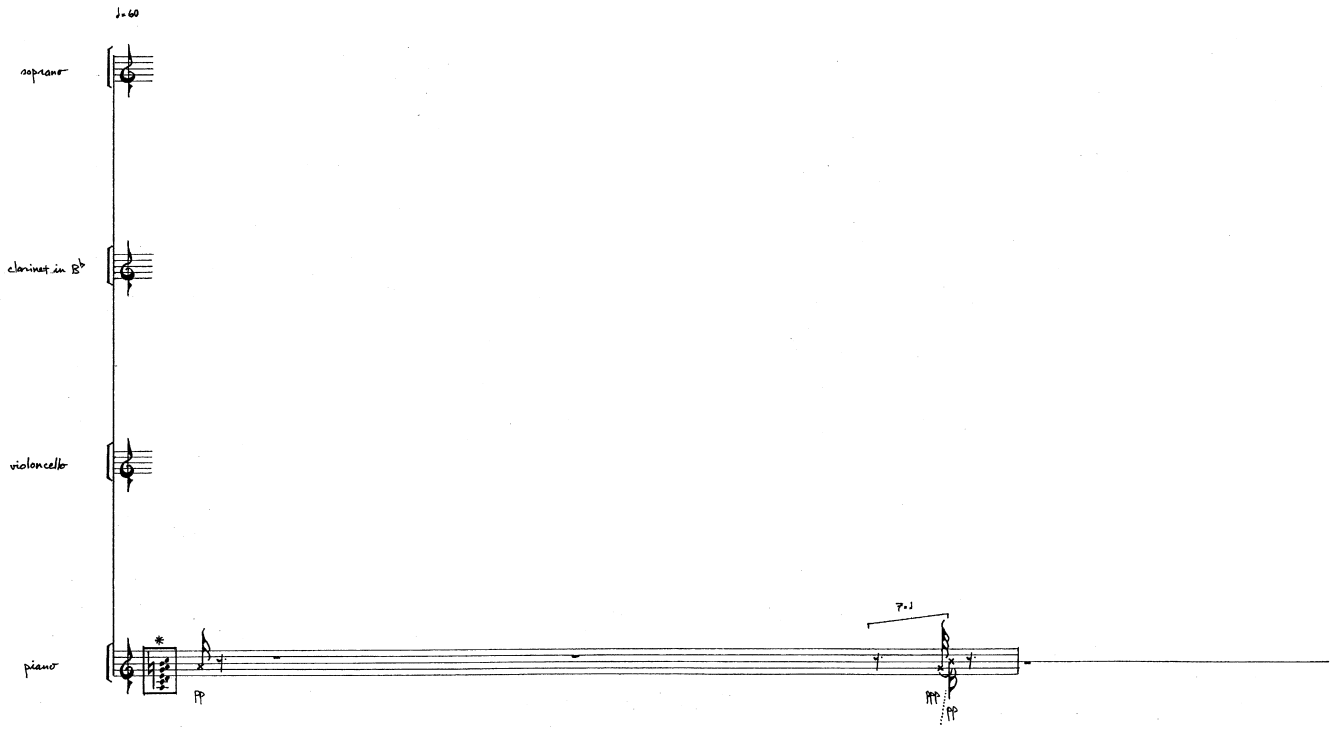

Ped. (sempre) ⟶

*~ Hold this collection of pitches with the sostenuto pedal throughout the piece. If an incorrect string is played, clear the sustained pitches as covertly as possible – the ST will retain the correct pitches. This must all be accomplished with only one foot.

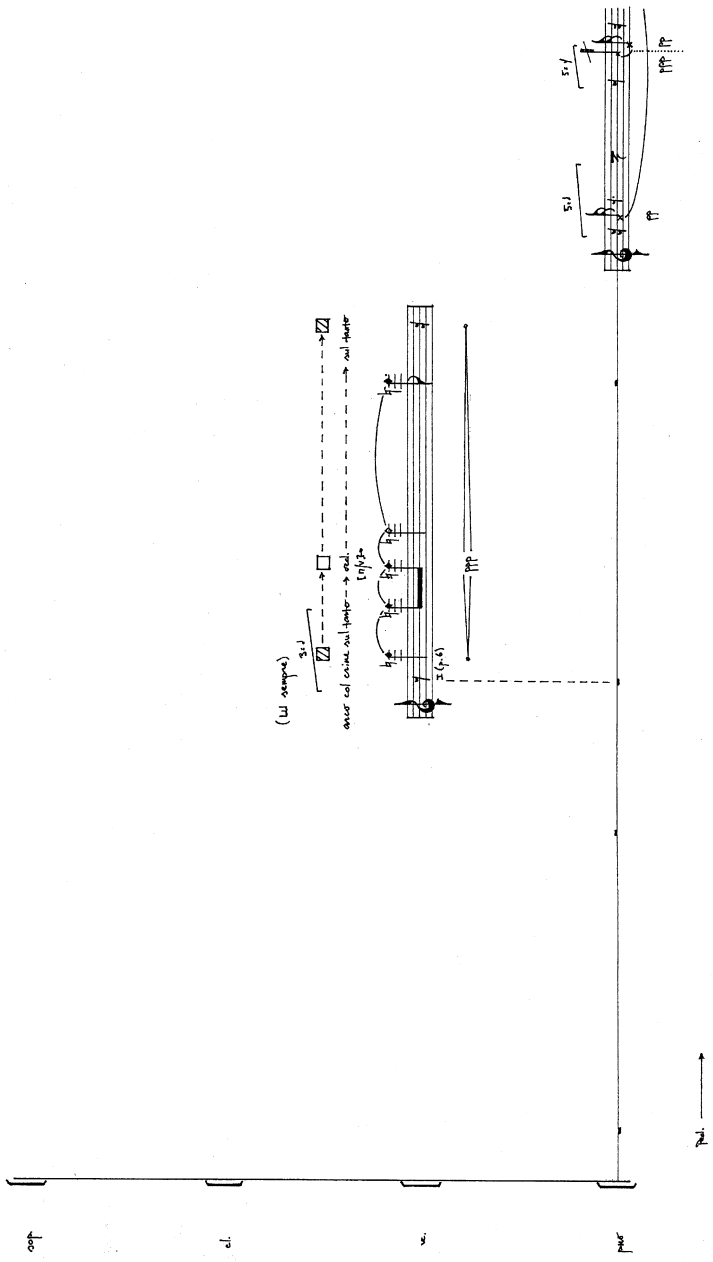

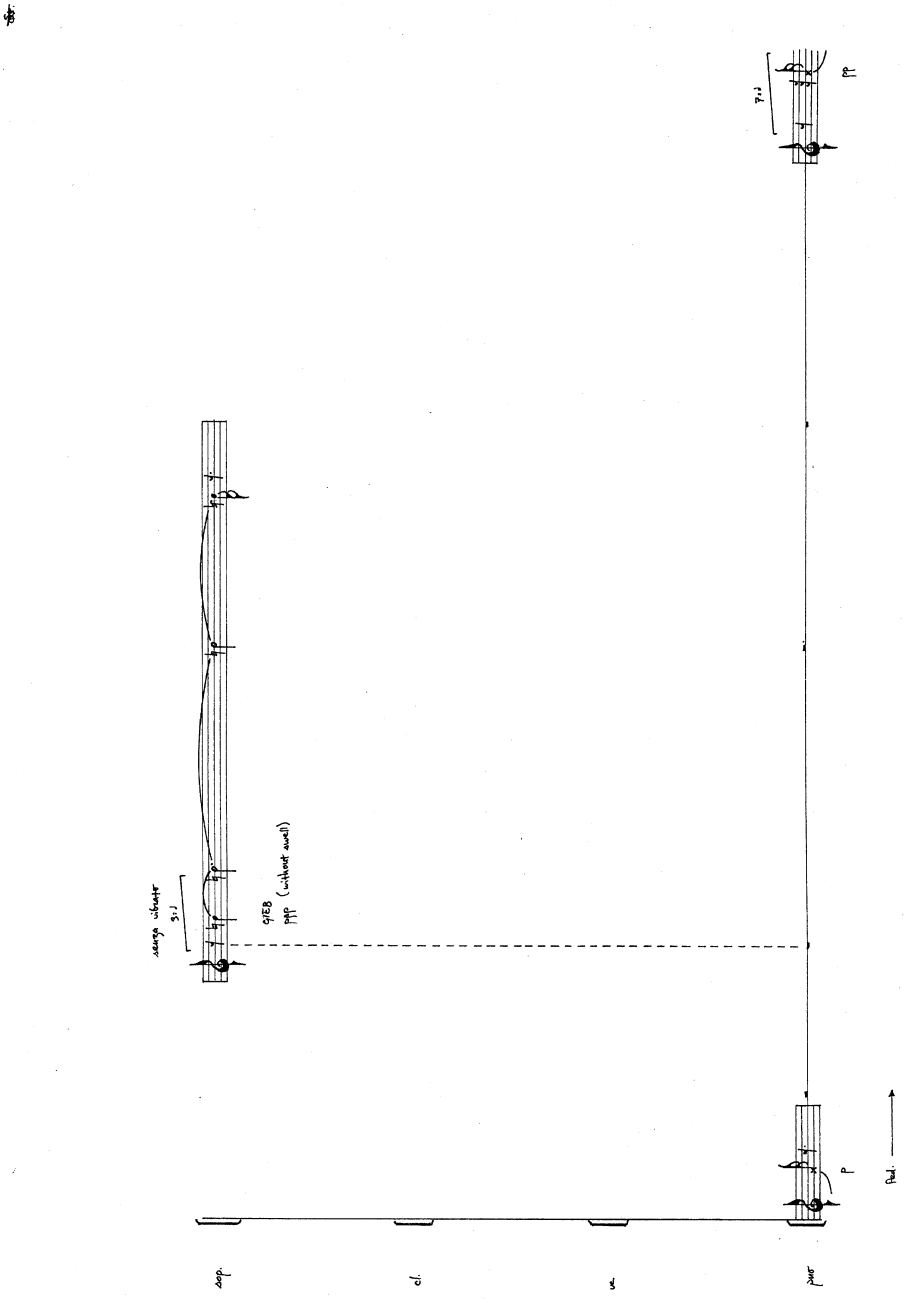
sorga vibrator
3:1
GTEB
ppp (without swell)
7:1
pp
p
Fed.
sop.
cl.
ve.
pwr

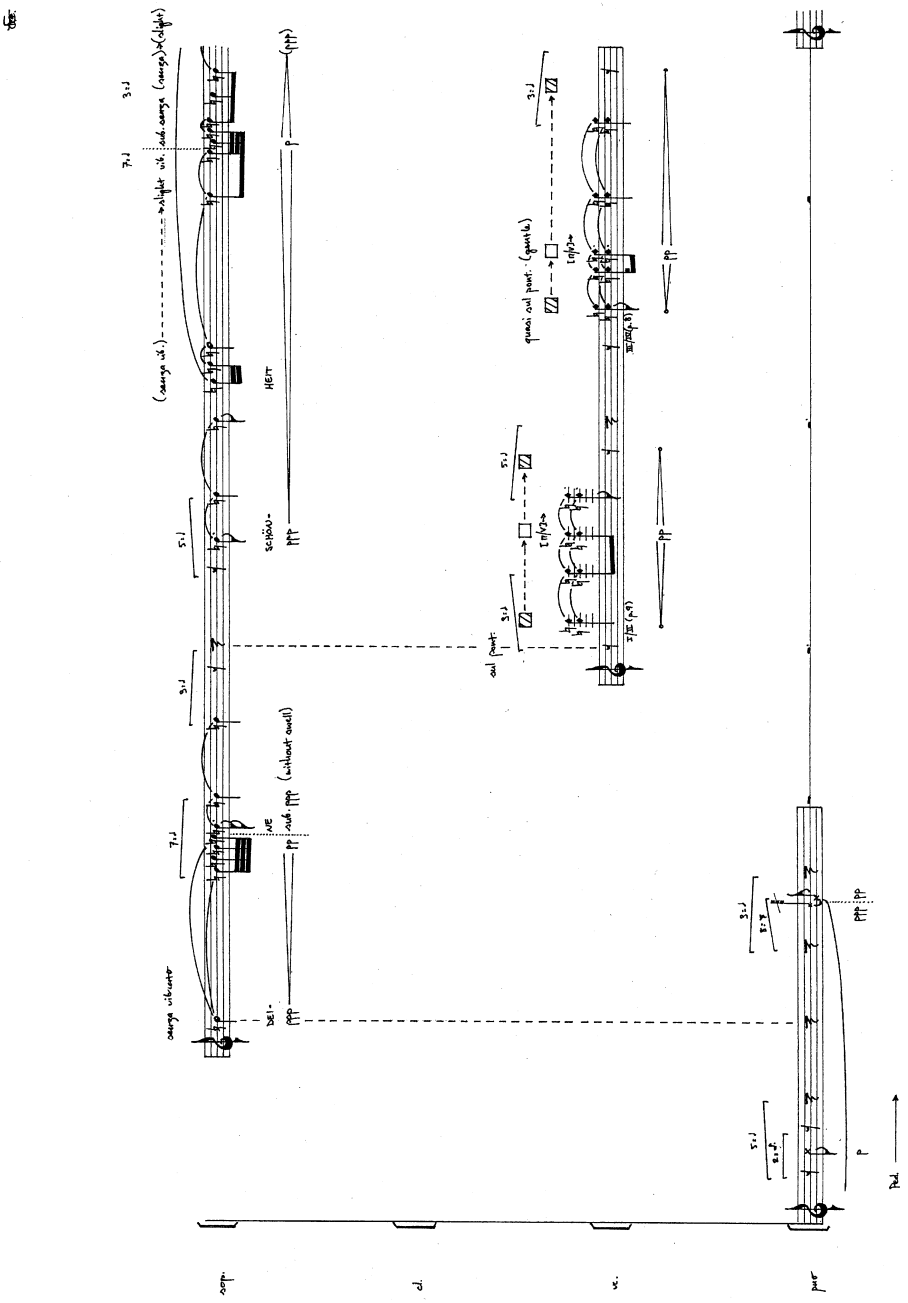

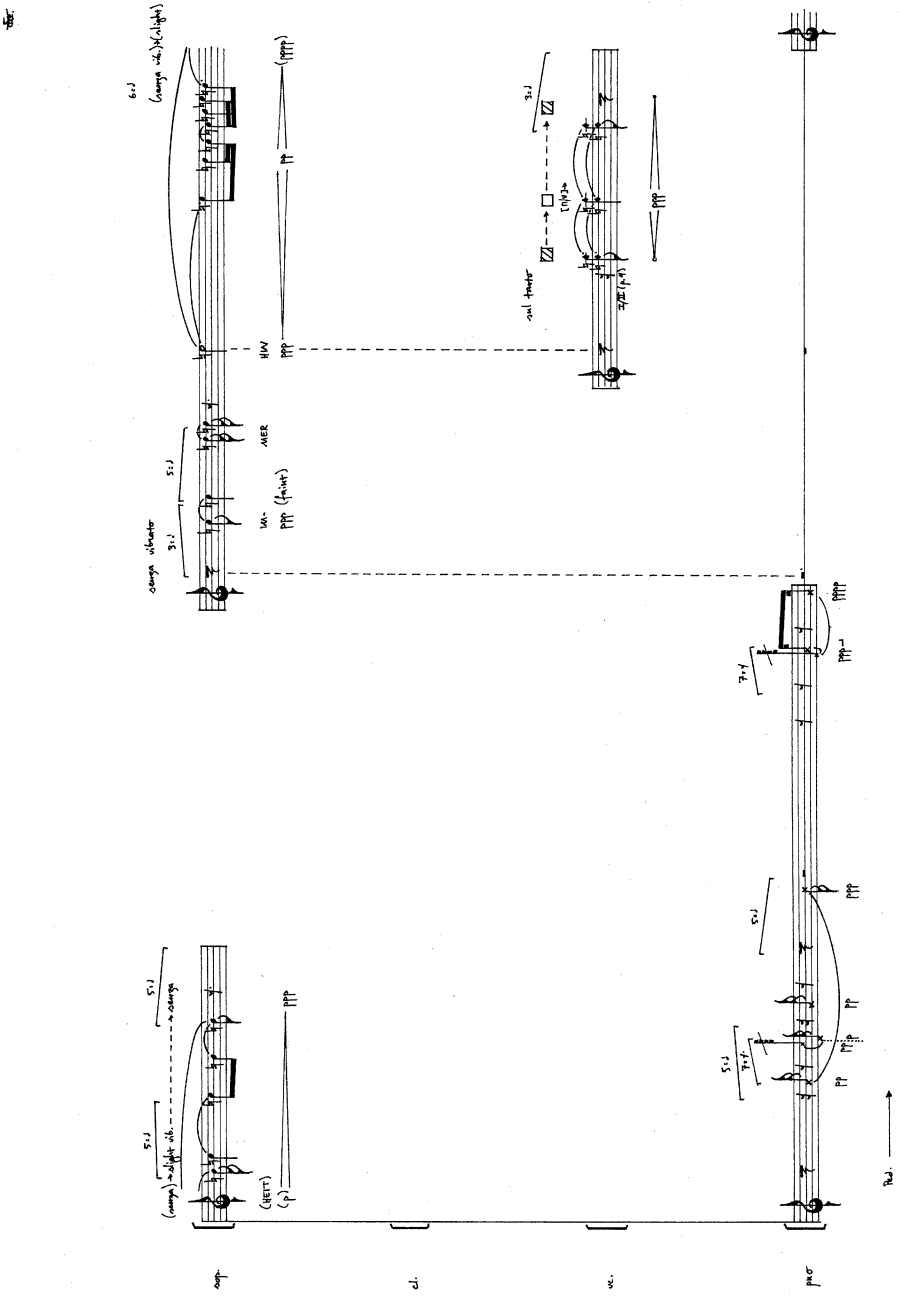

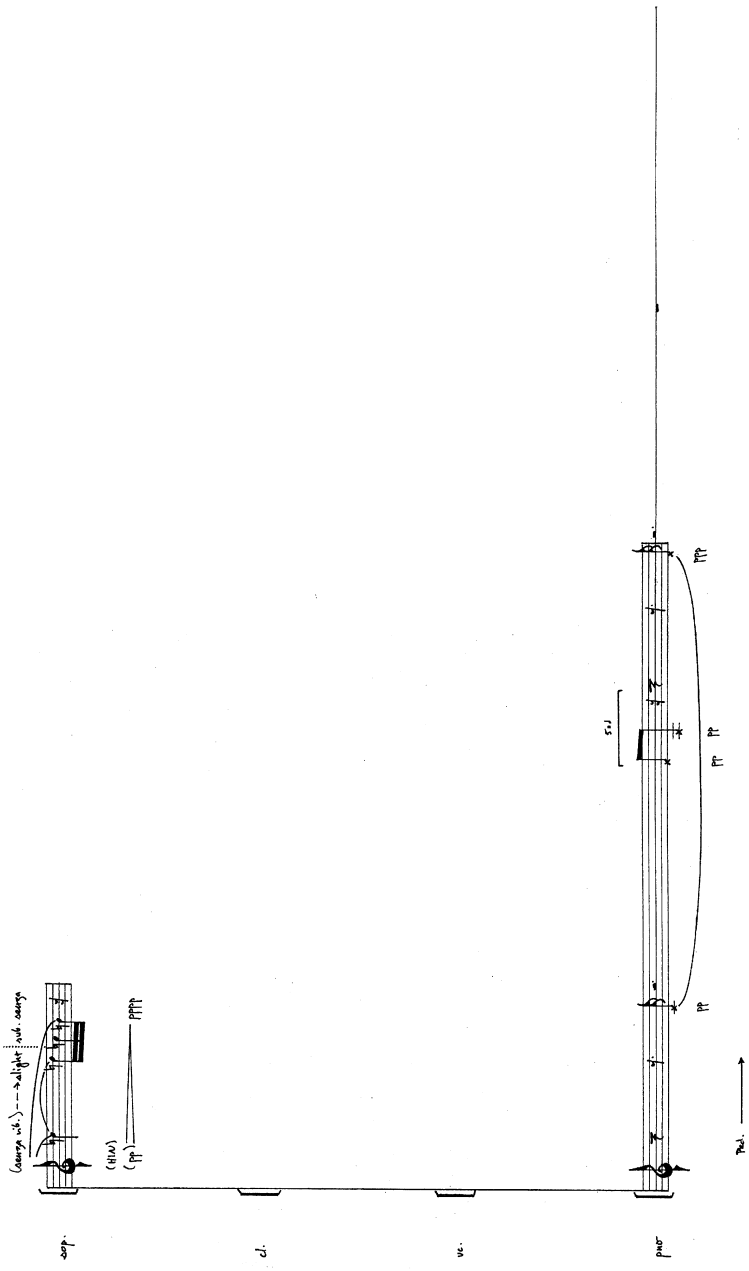
(Saenga vib.) --- → slight sub. saenga
(HIW)
(pp)
pppp
pp
pp
pp
pppp
5.1
Pad.
oop.
cl.
vc.
pmo

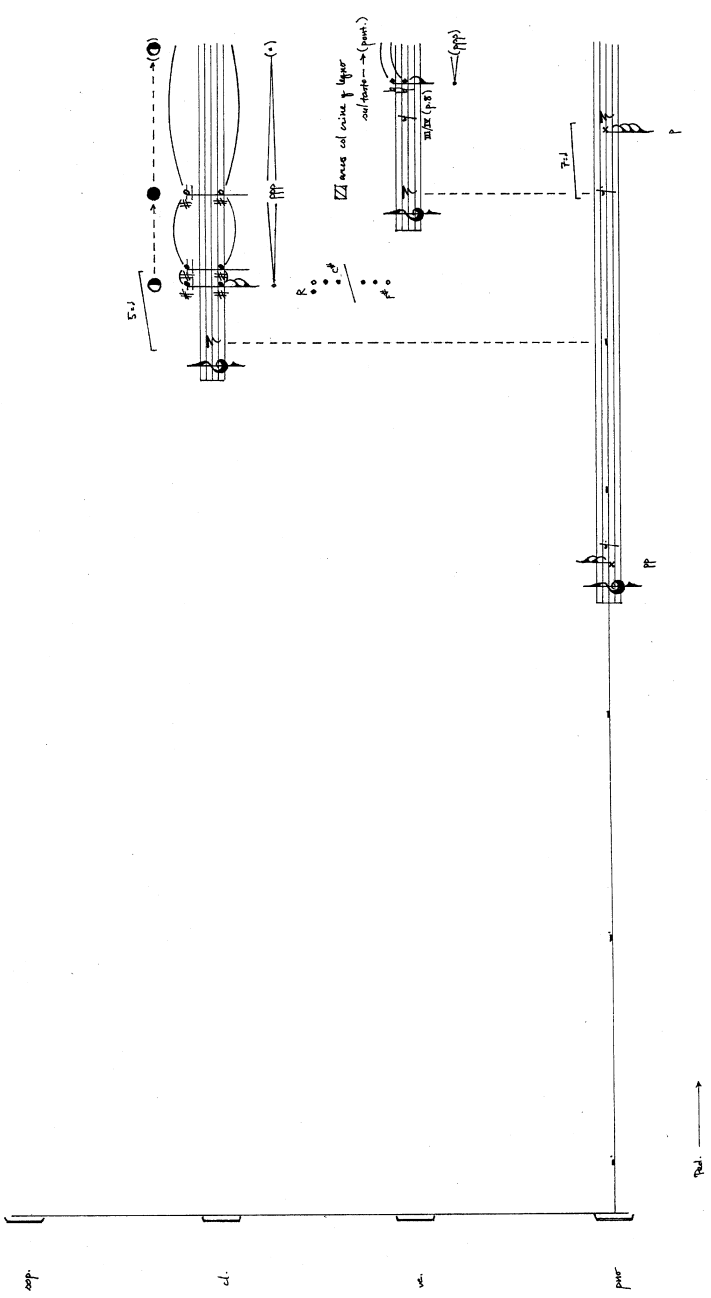

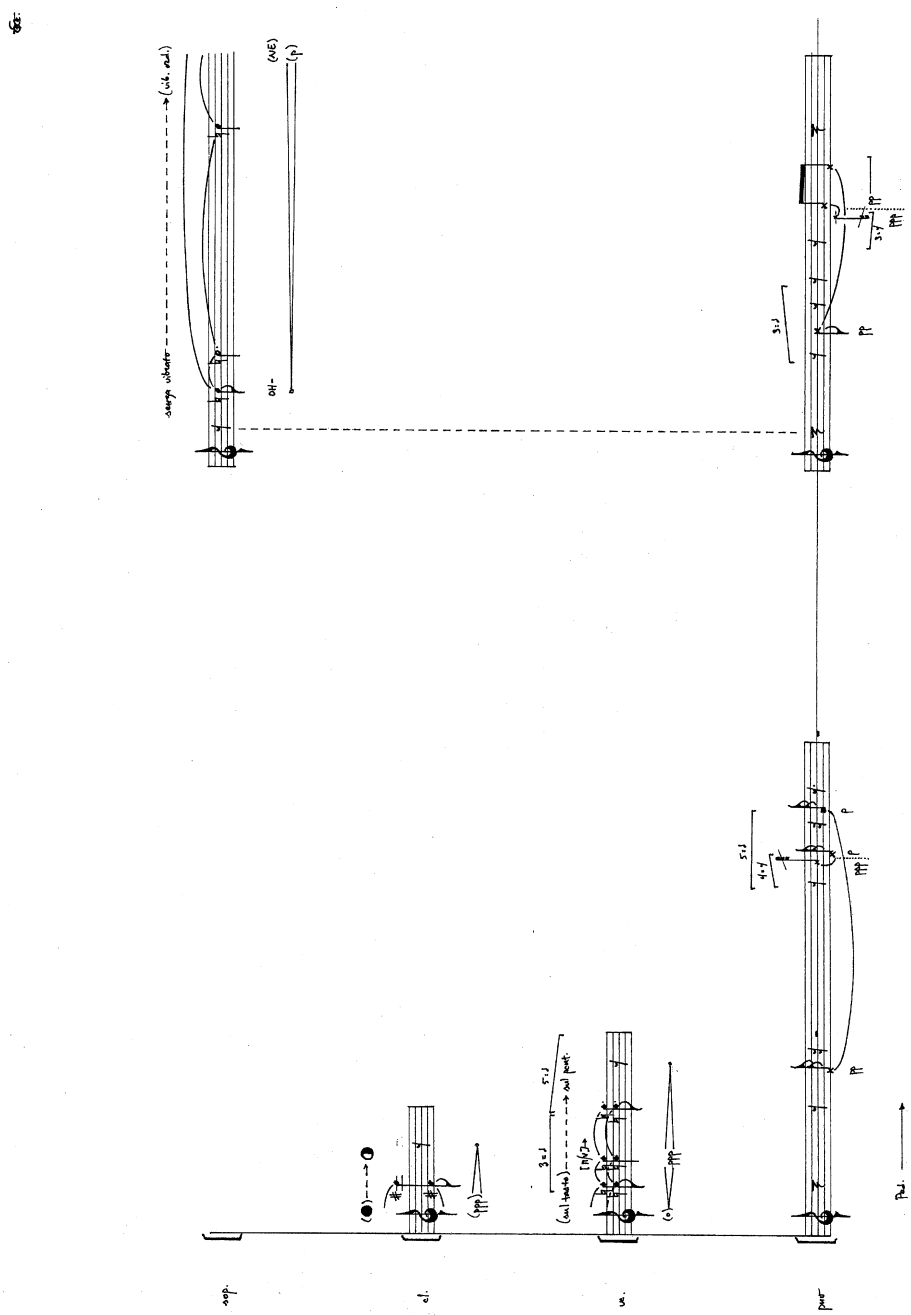

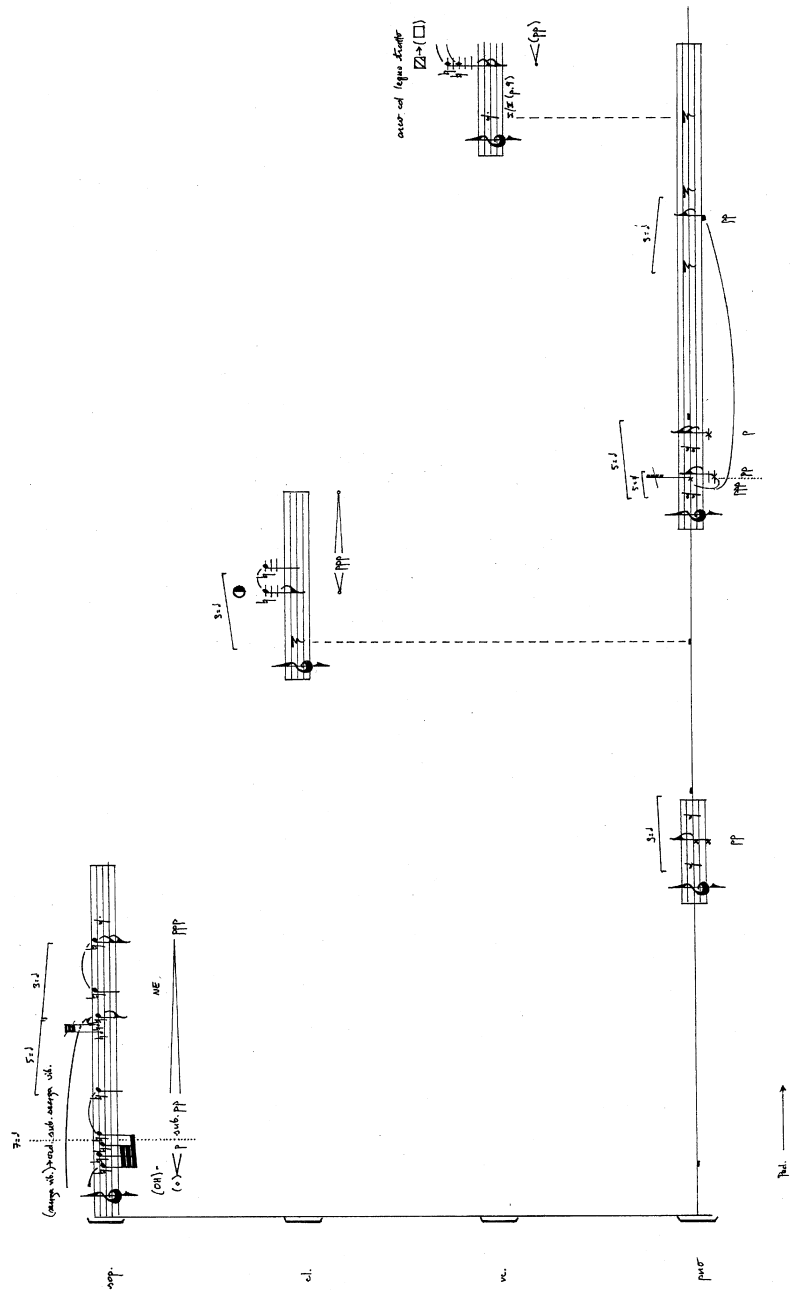

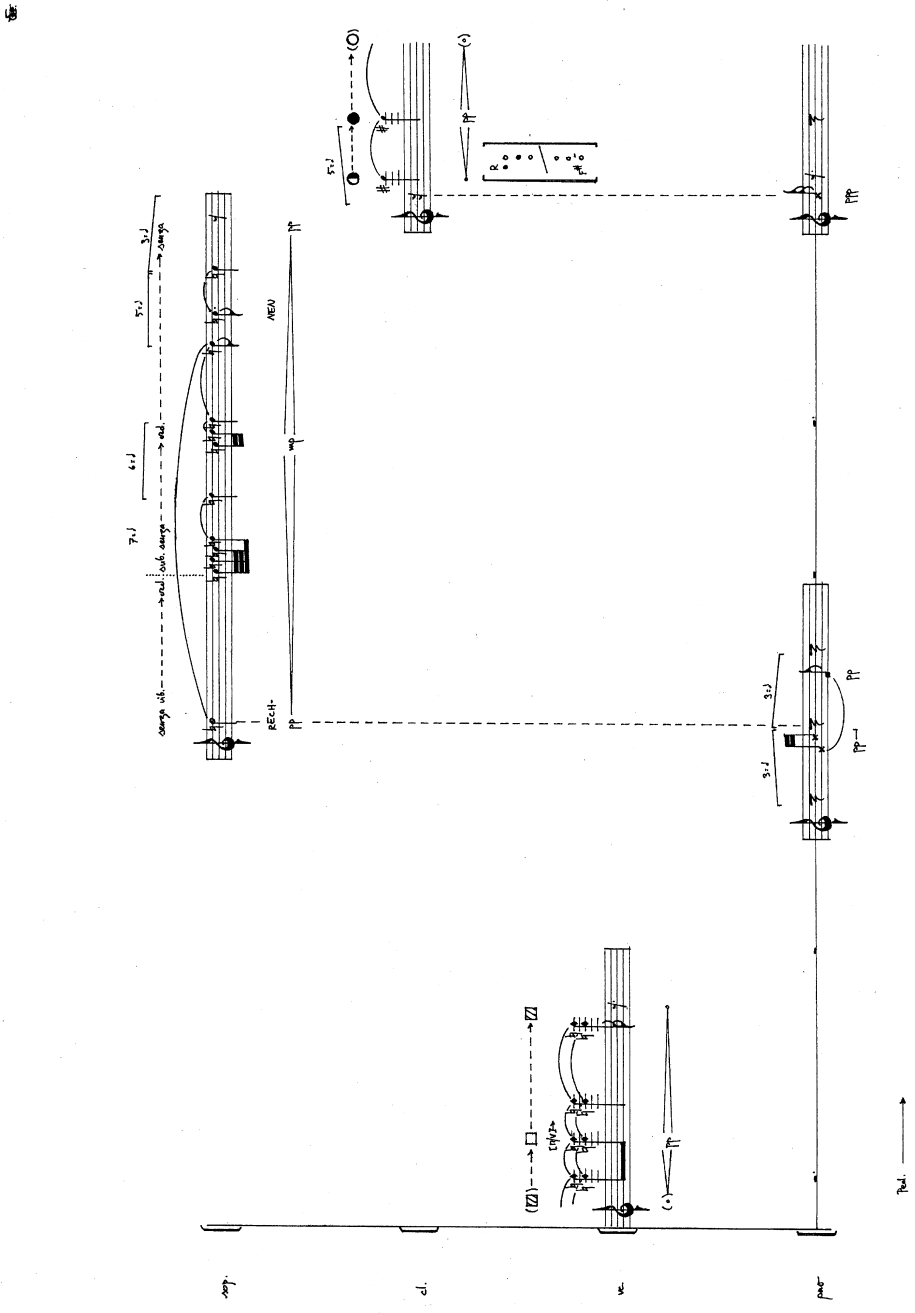

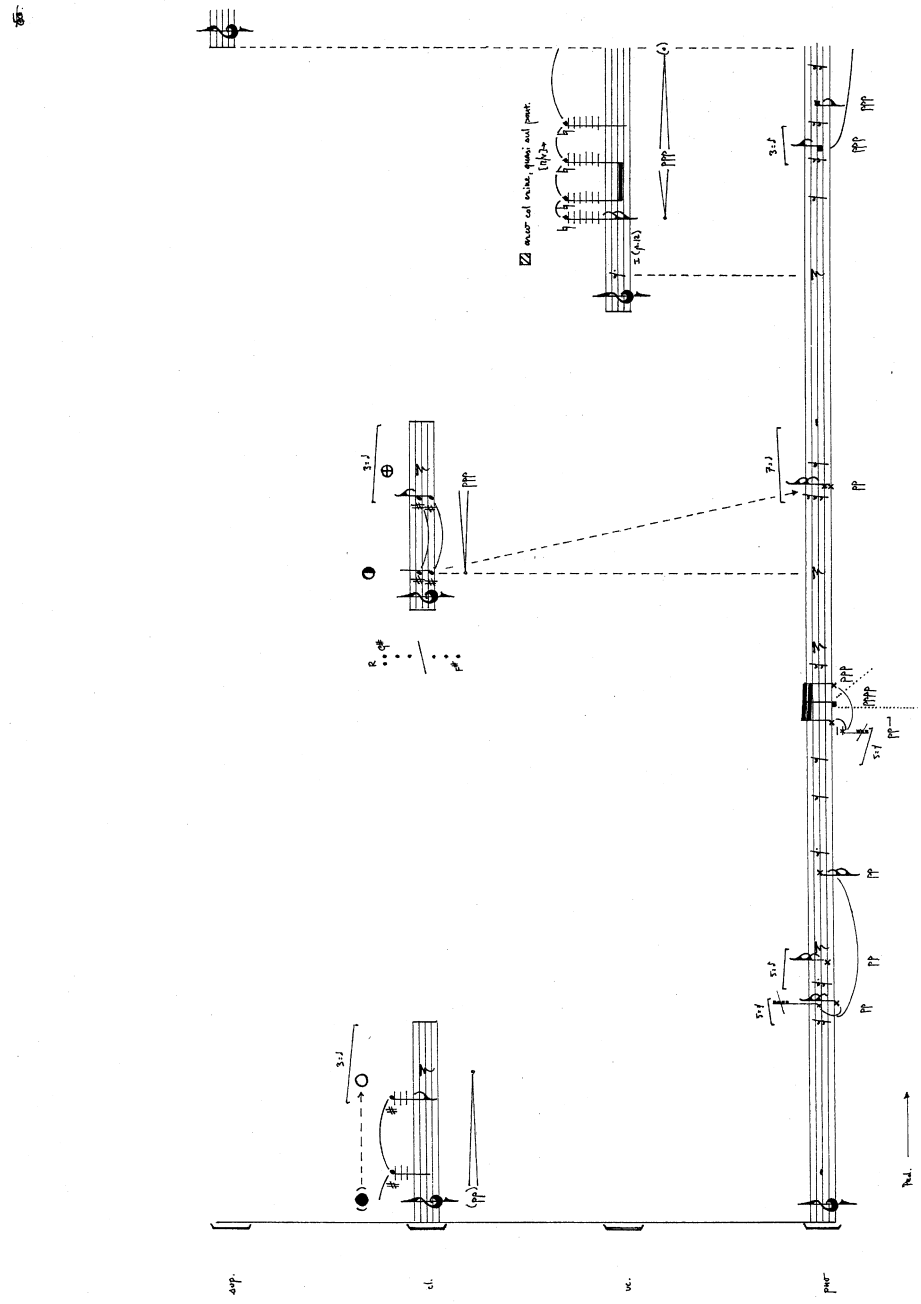
sop.
cl.
vc.
perc

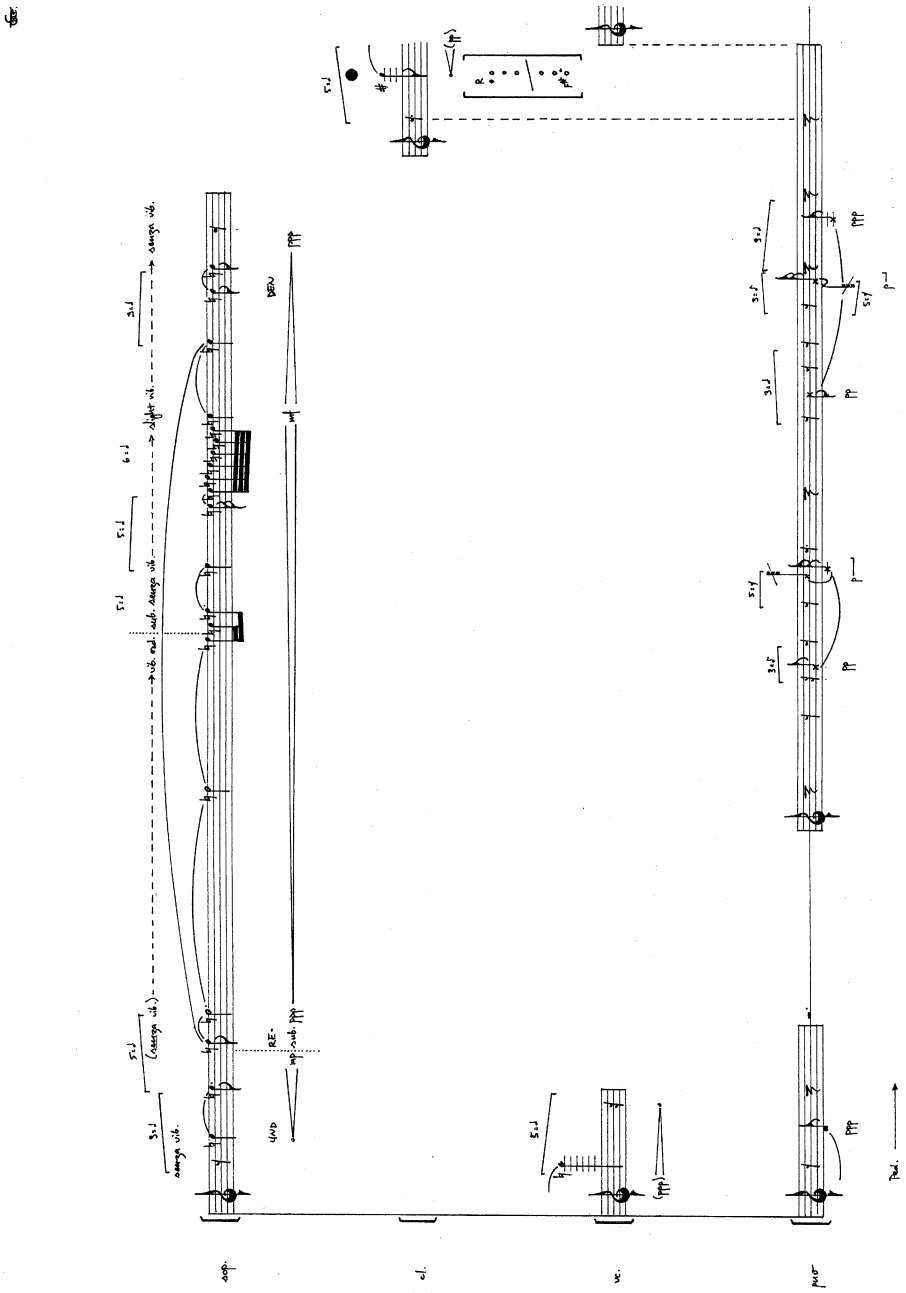

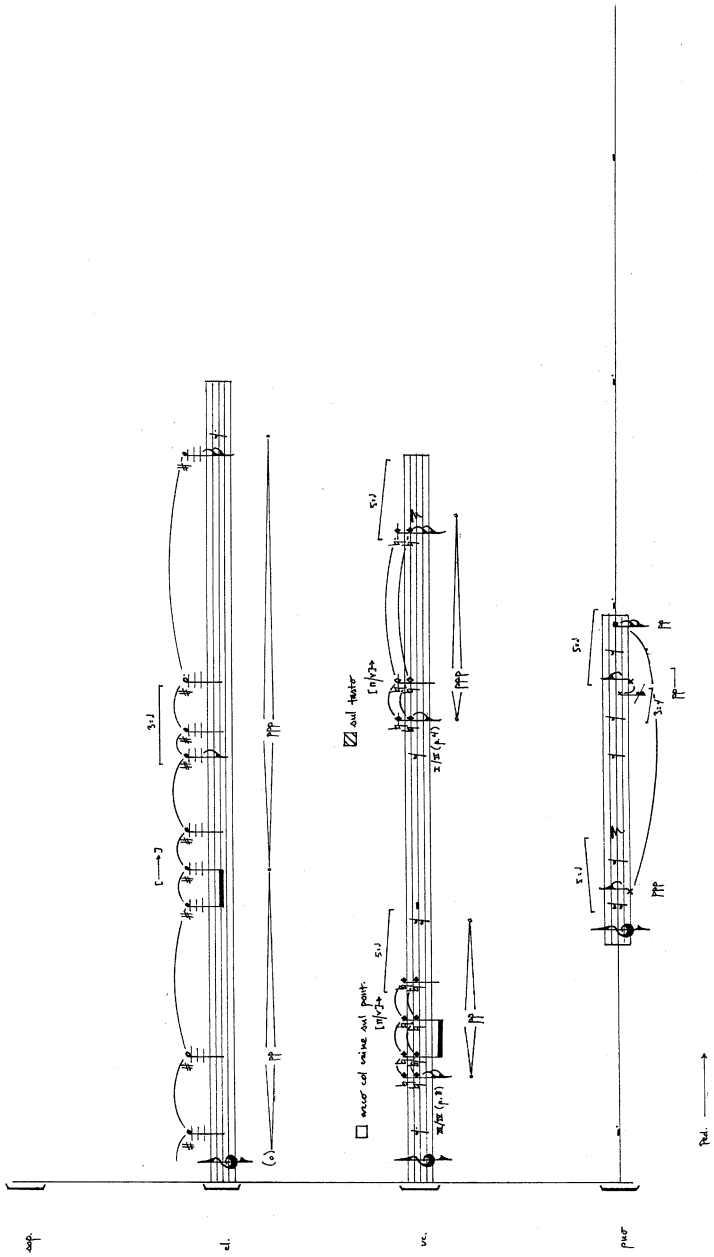

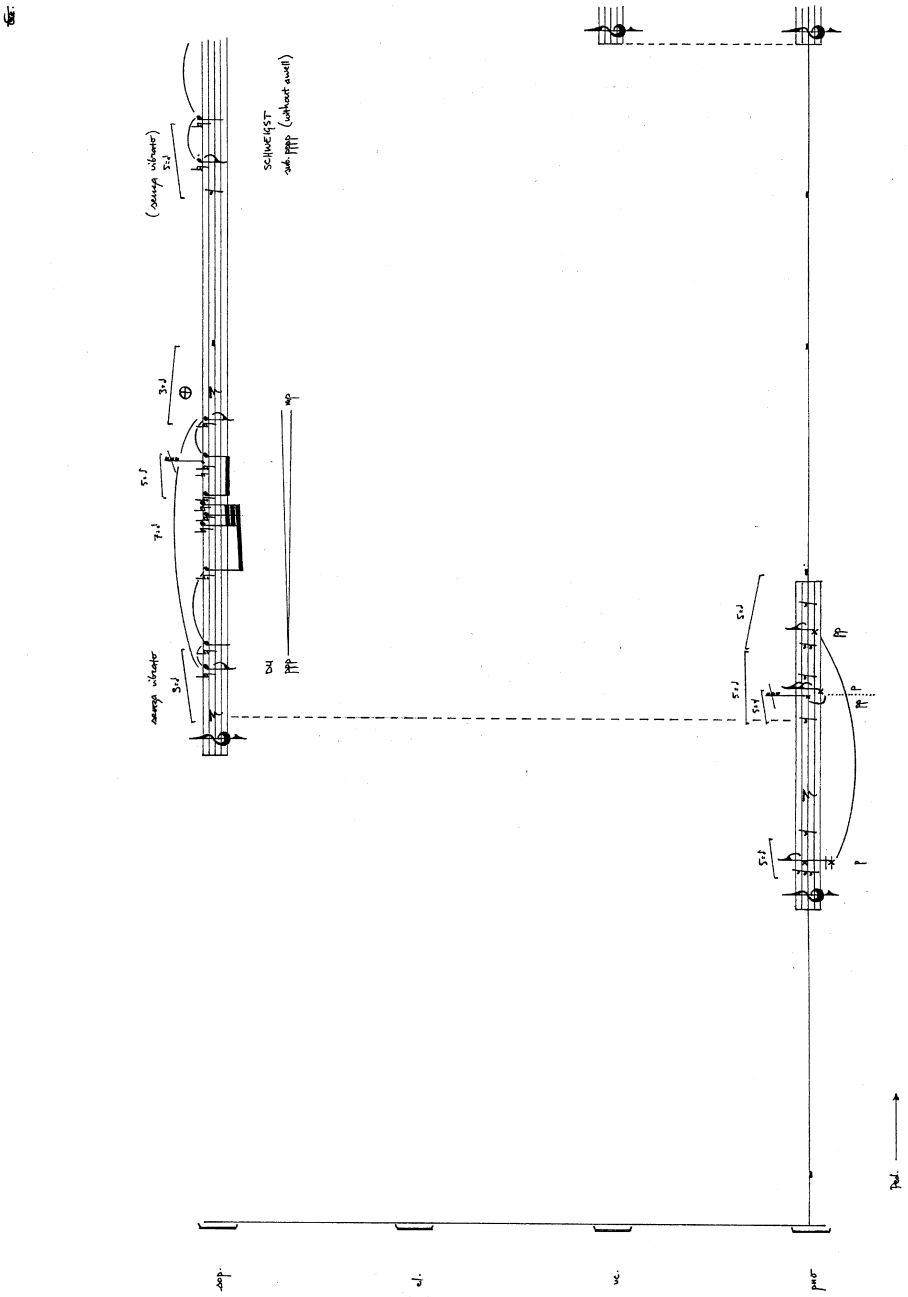
SCHWEIGST
sub. ppp (without swell)
(senza vibrator)
senza vibrator
DU
ppp
mp
Pod.

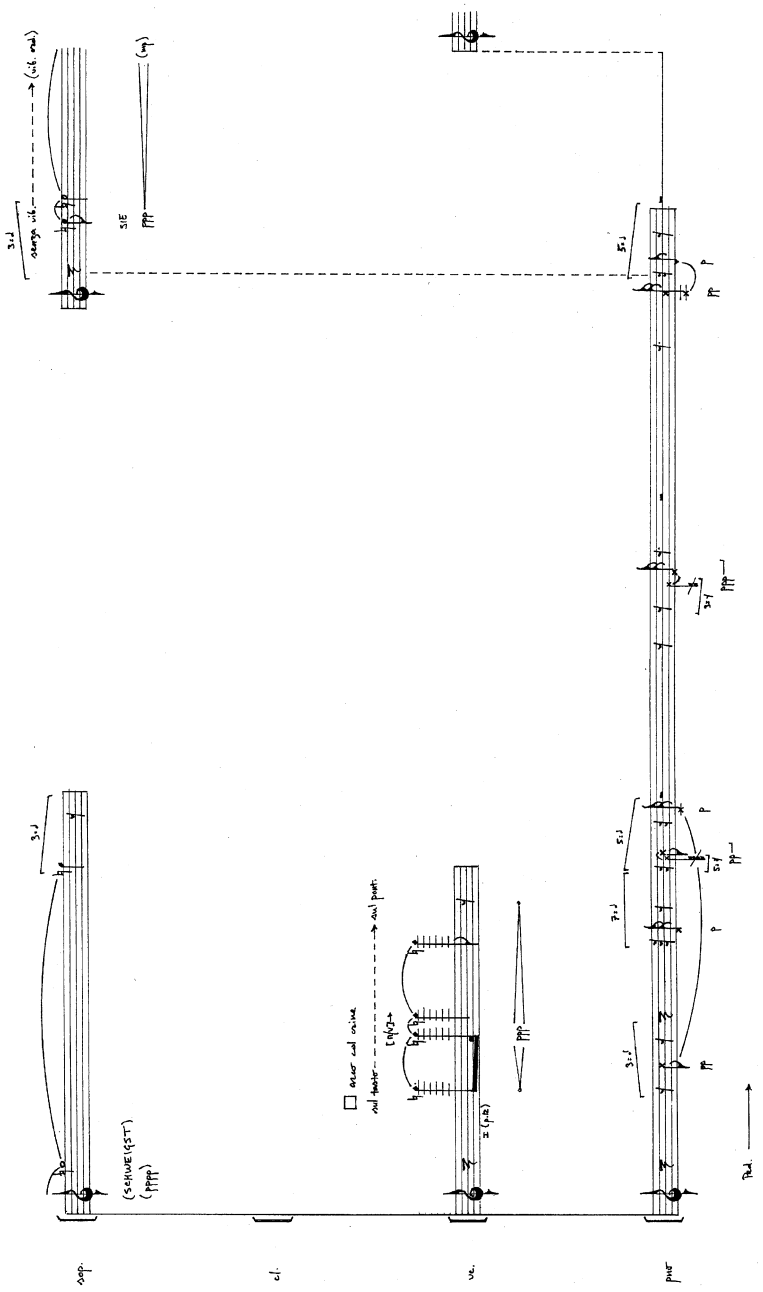
sop.
cl.
vc.
piano

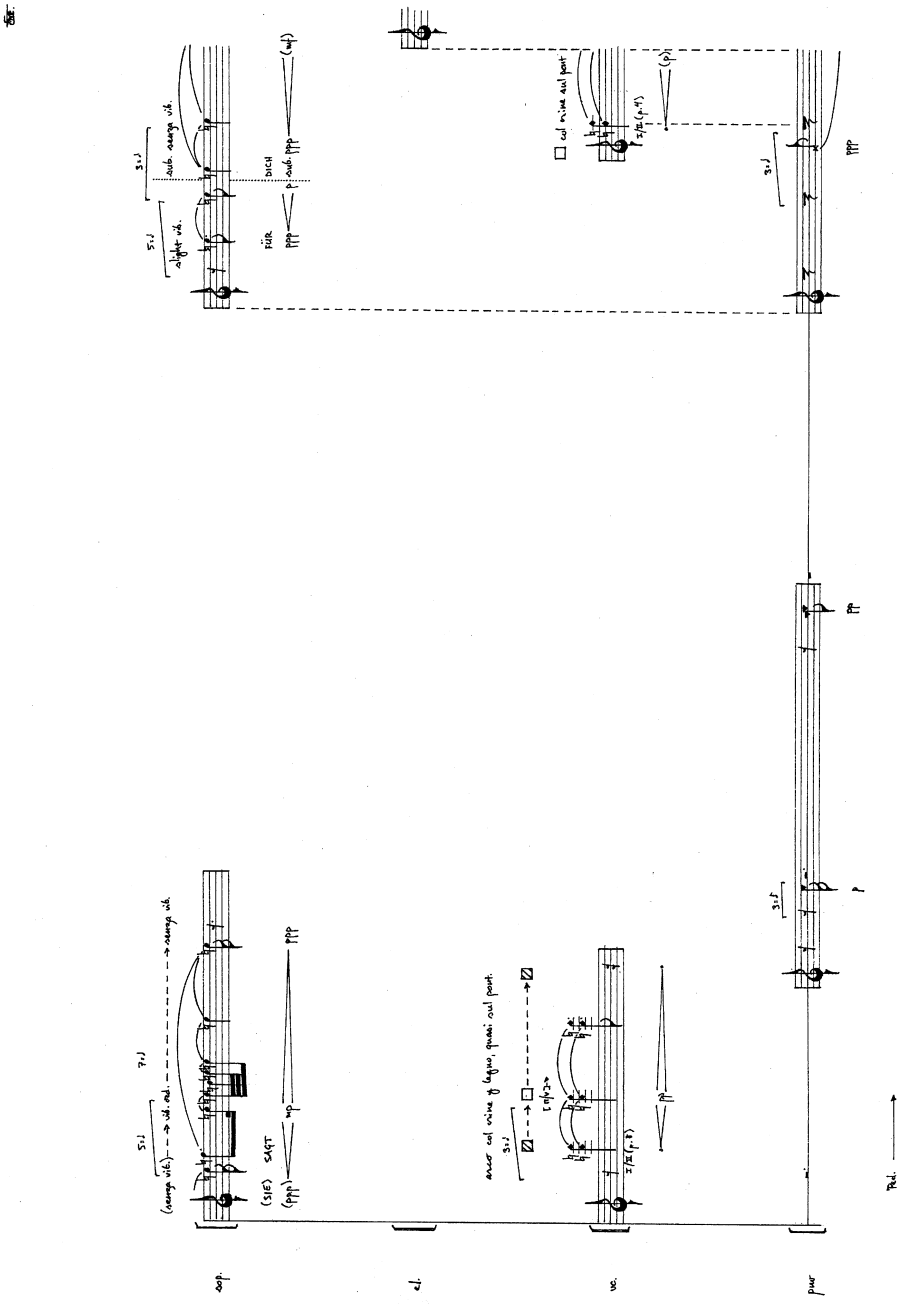
sop.
vc.
pno

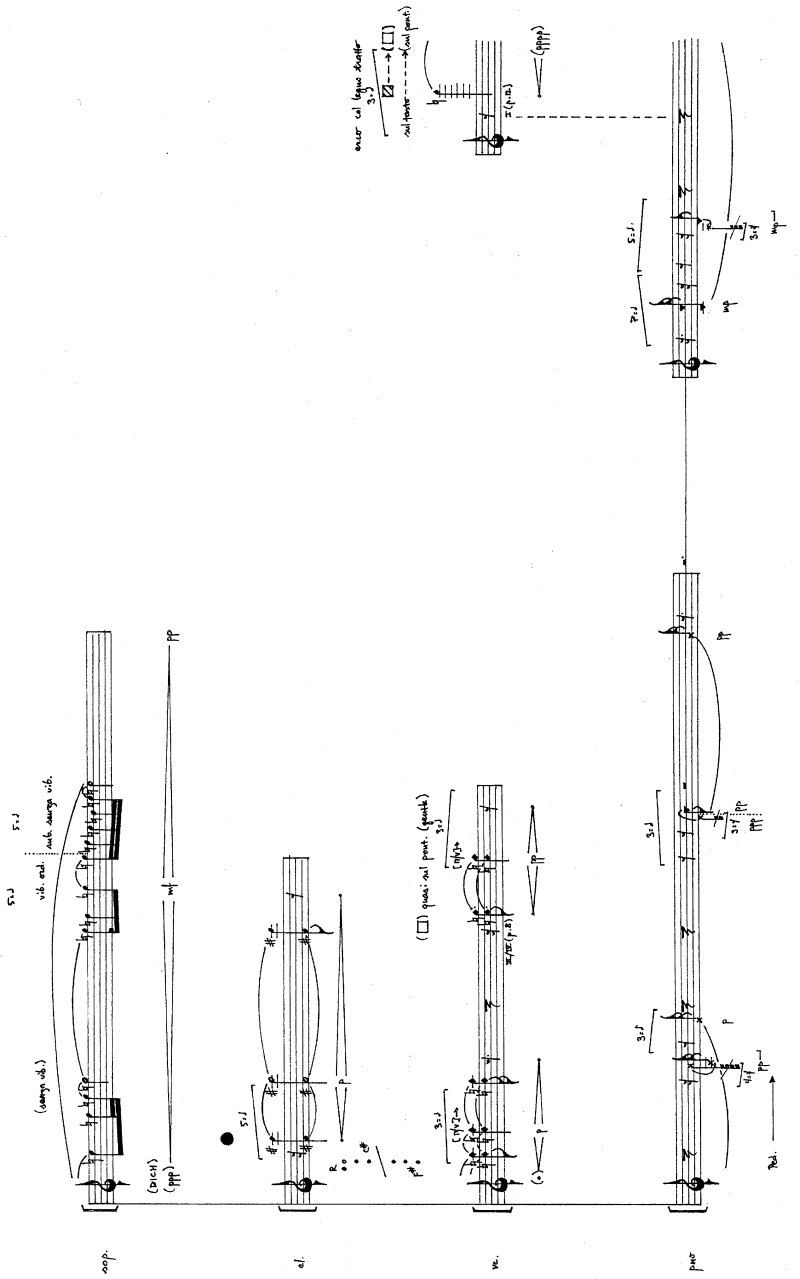

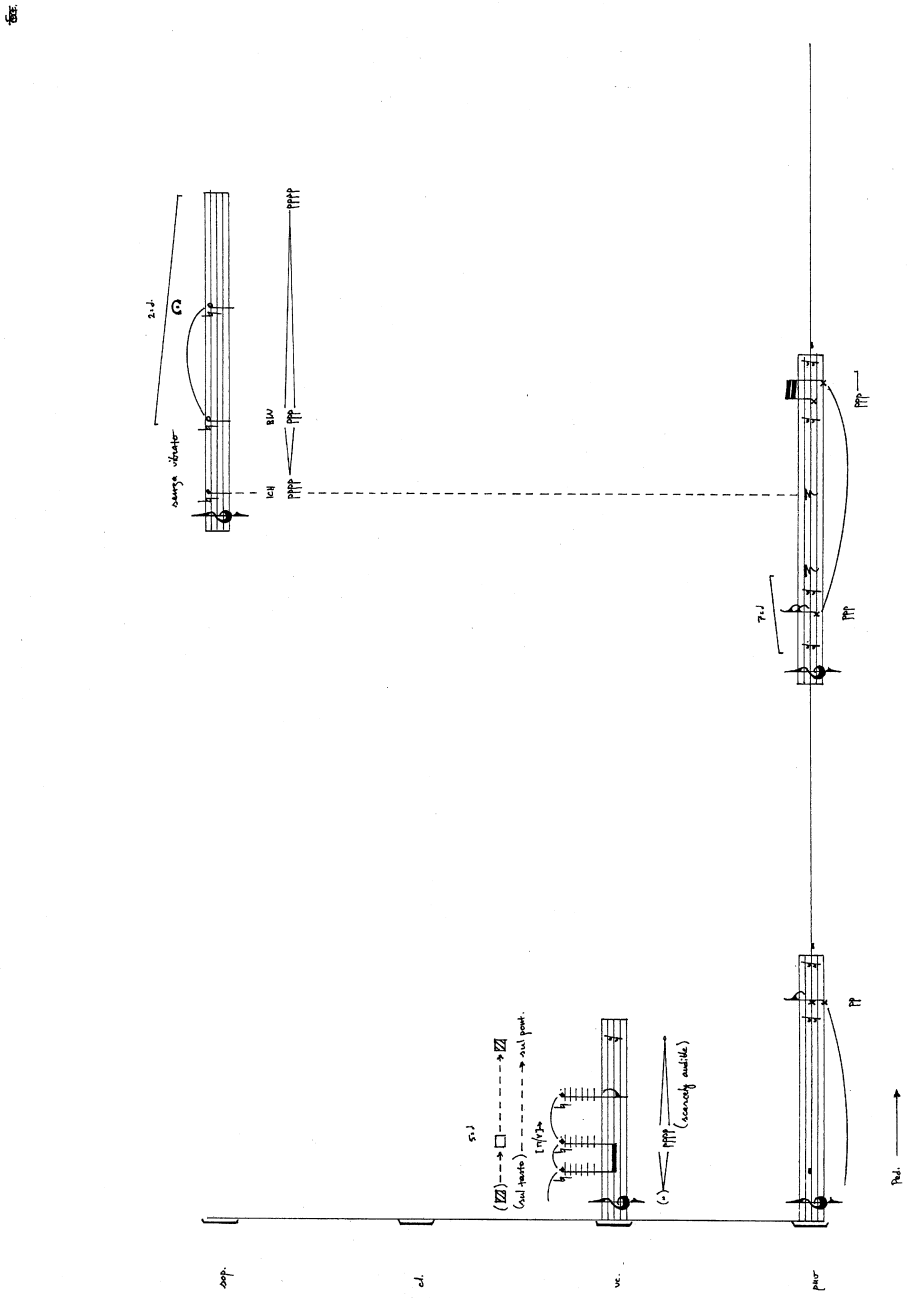

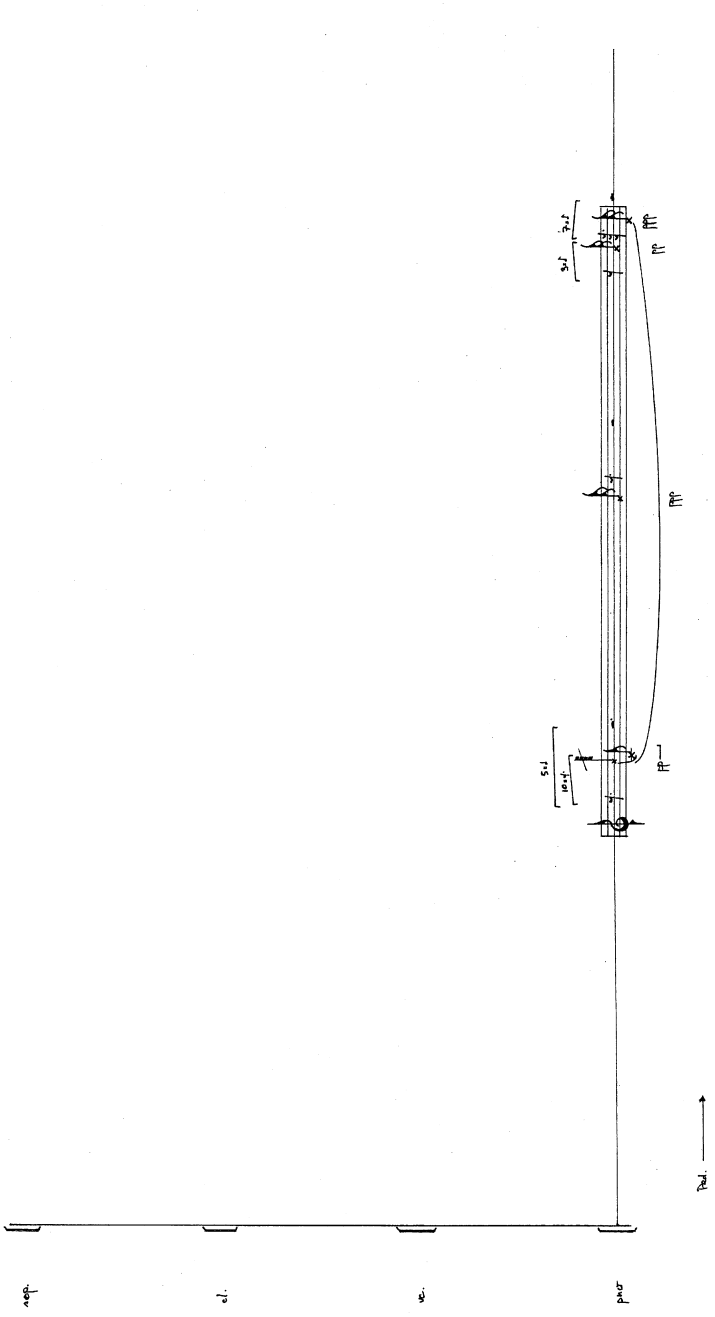

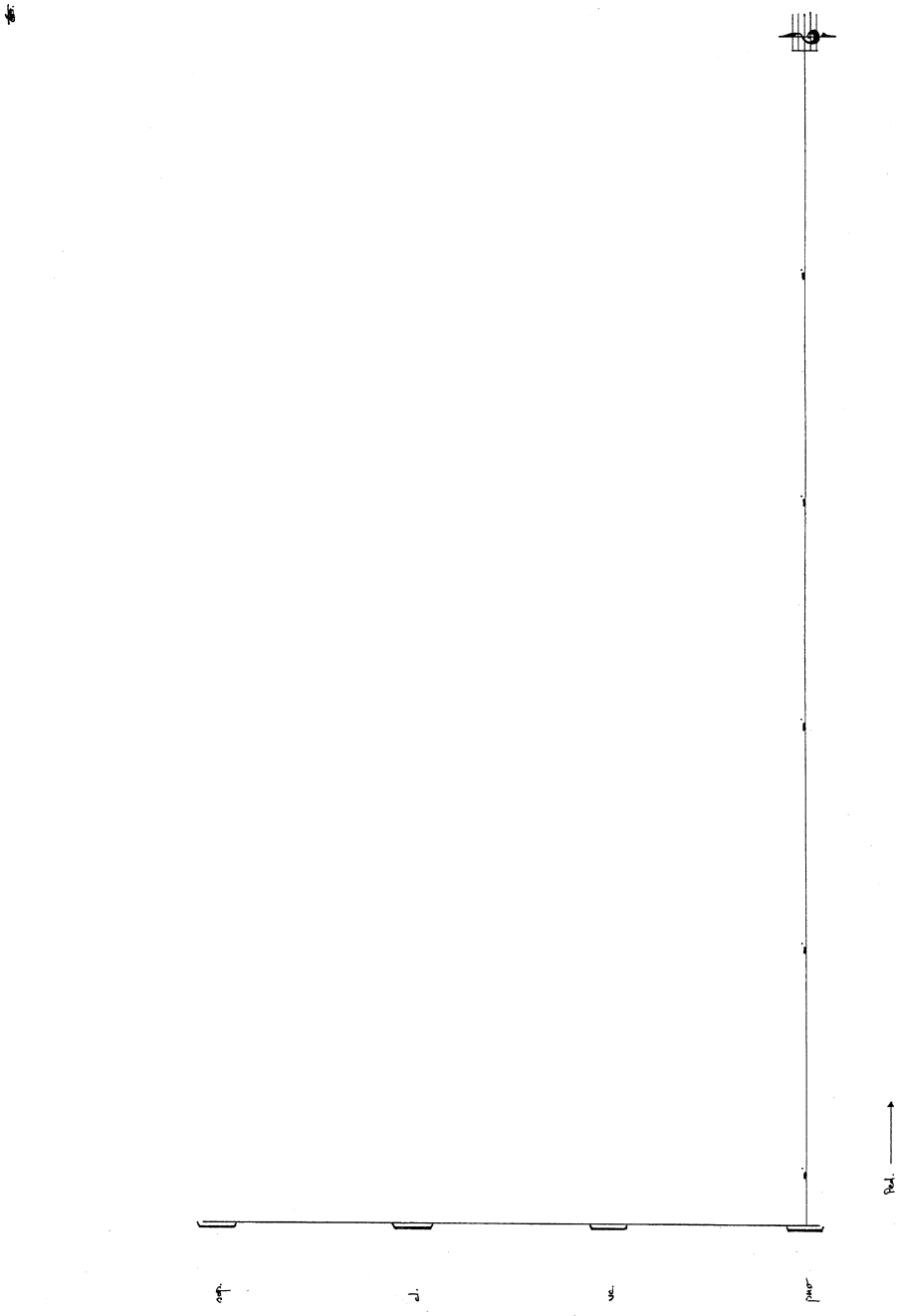

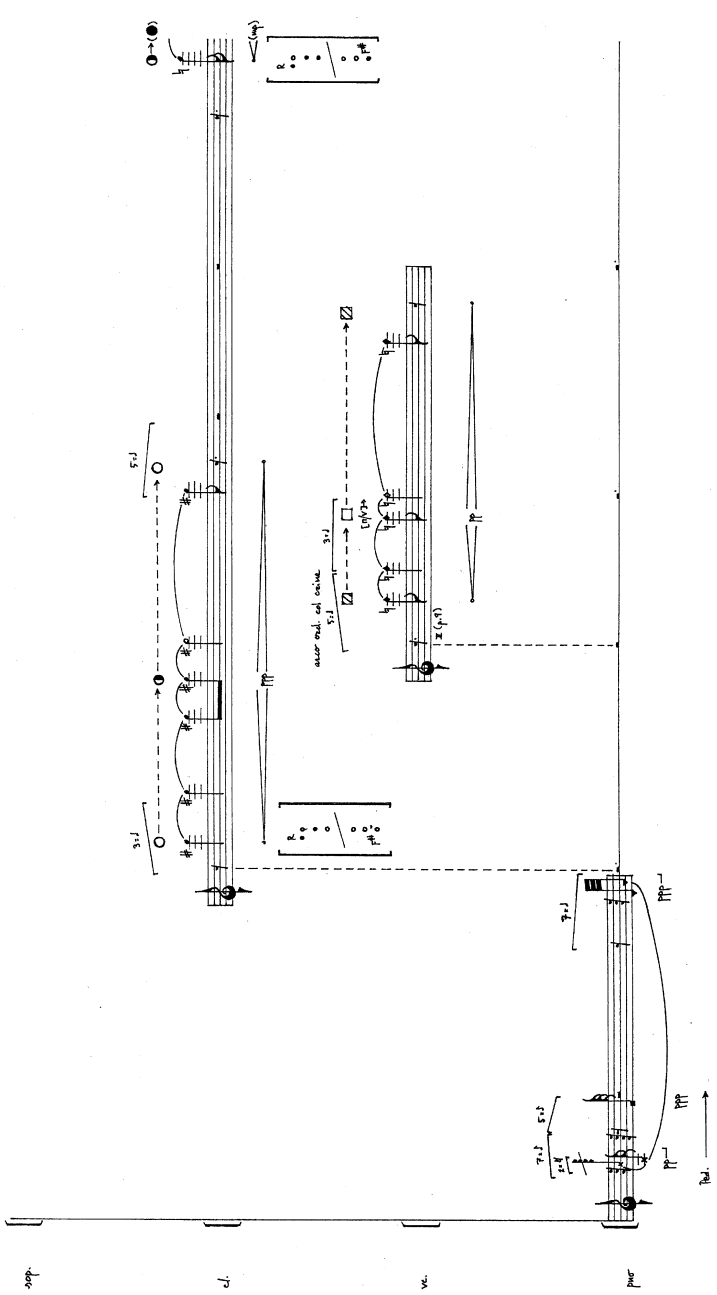

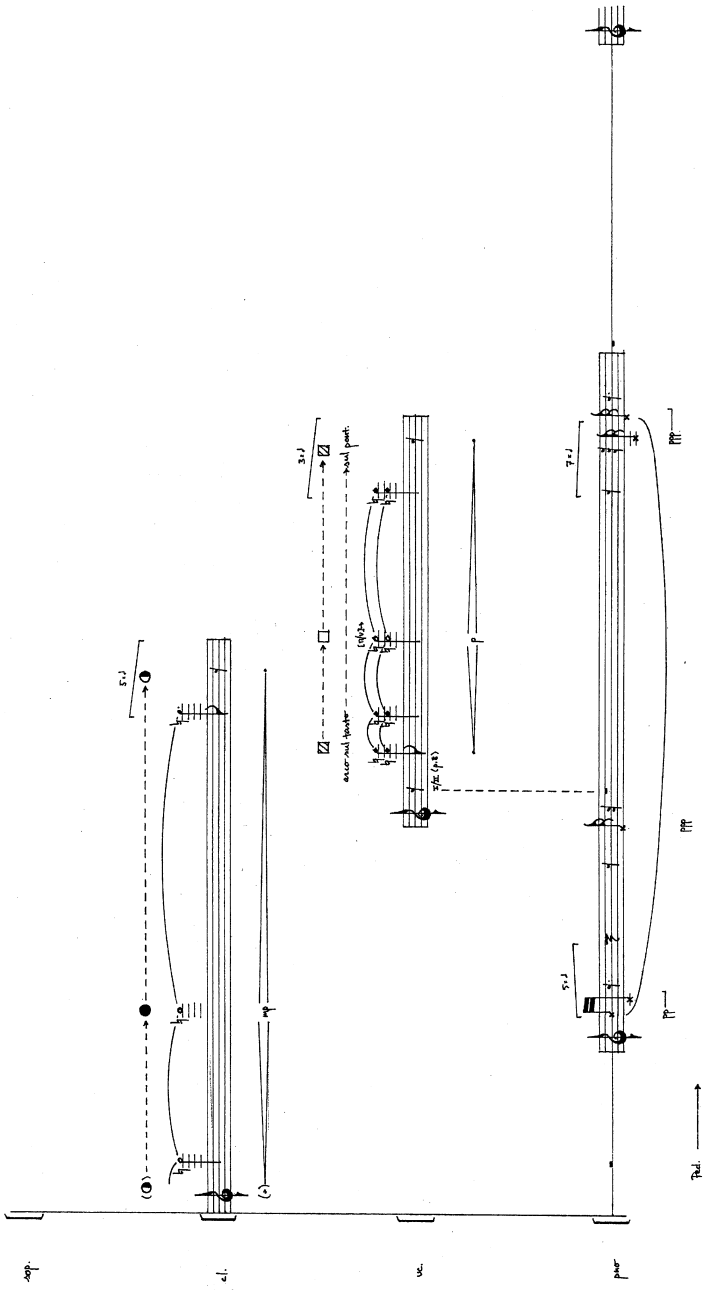

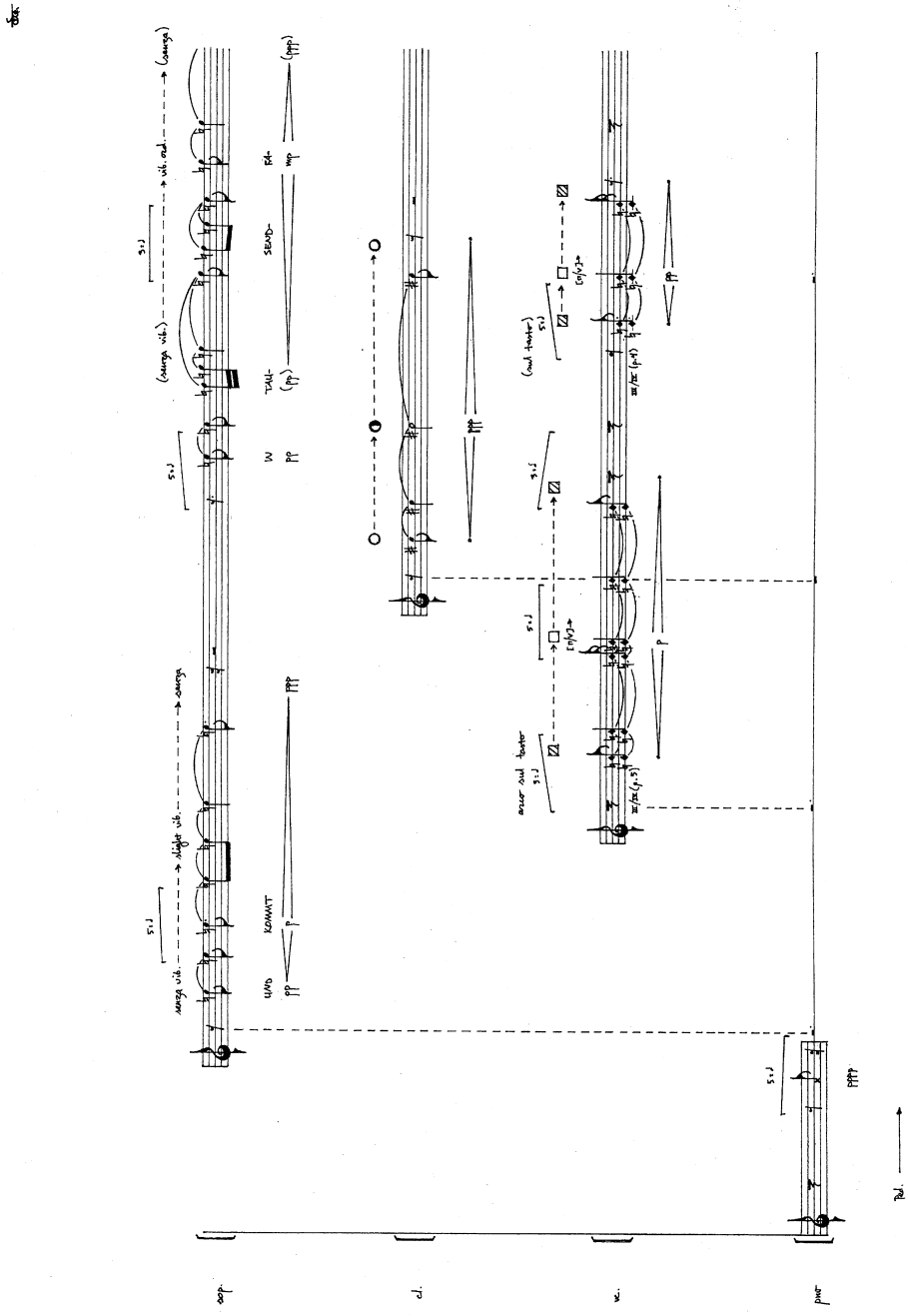

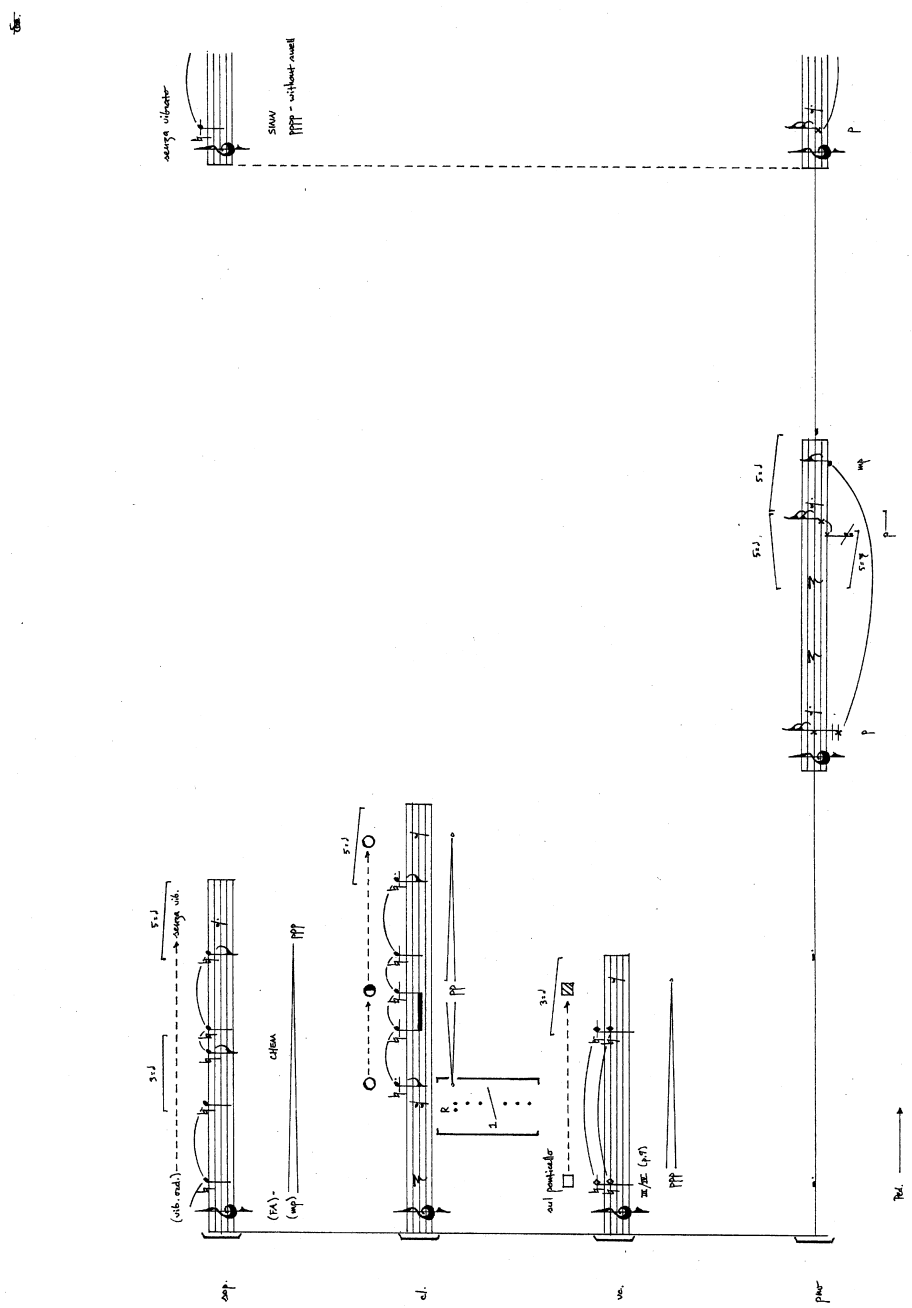
sesga vibrator
SMW
ppp - without swell
(vib. ord.)
3:J
5:J
sesga vib.
CHEM
(FA) -
(mp)
ppp
5:J
pp
R
1
3:J
sul panticello
III/IC (p.9)
ppp
sop.
cl.
vo.
pmr
Pol.
p
5:J
5:J
5:J
mp
p
p

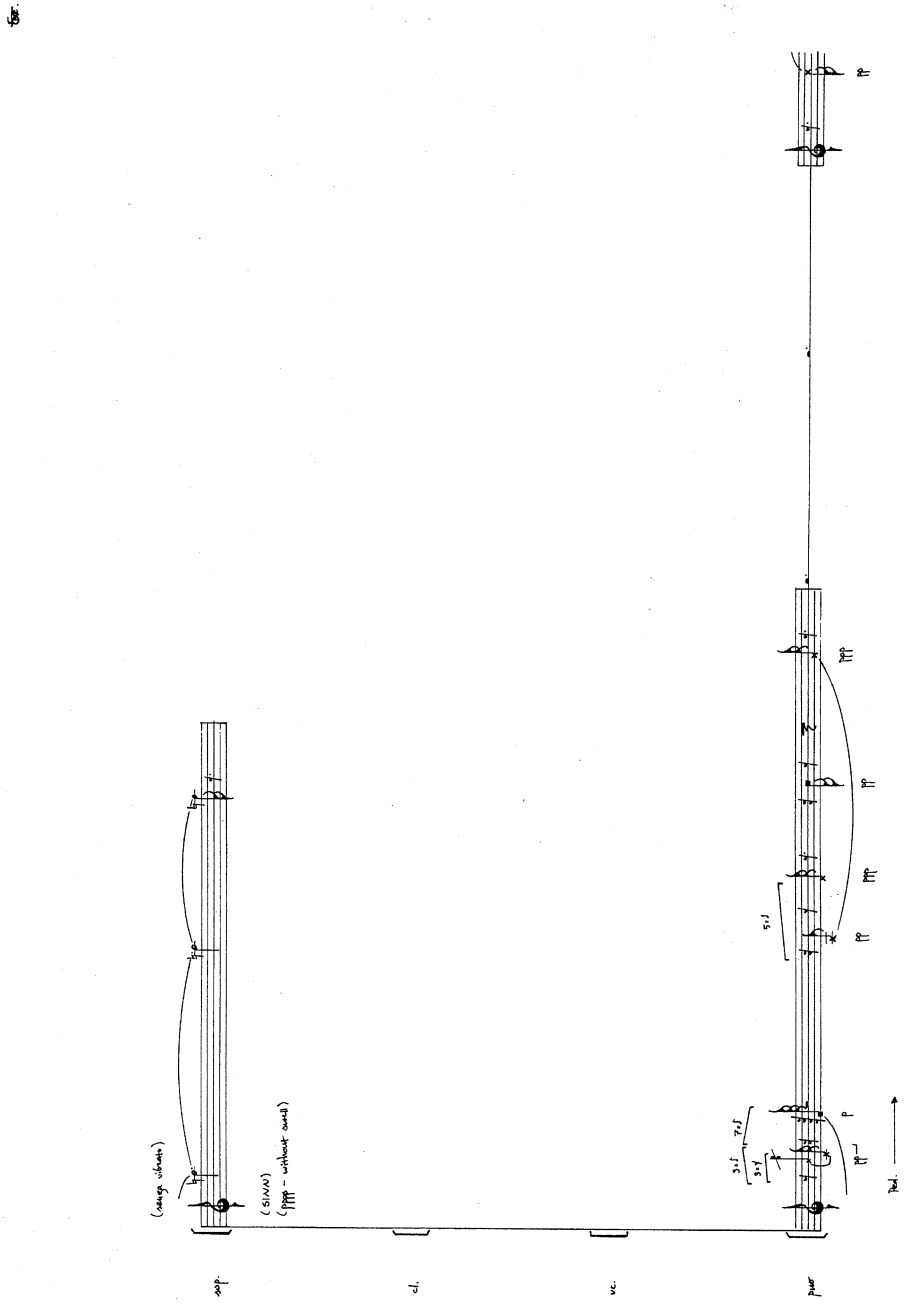

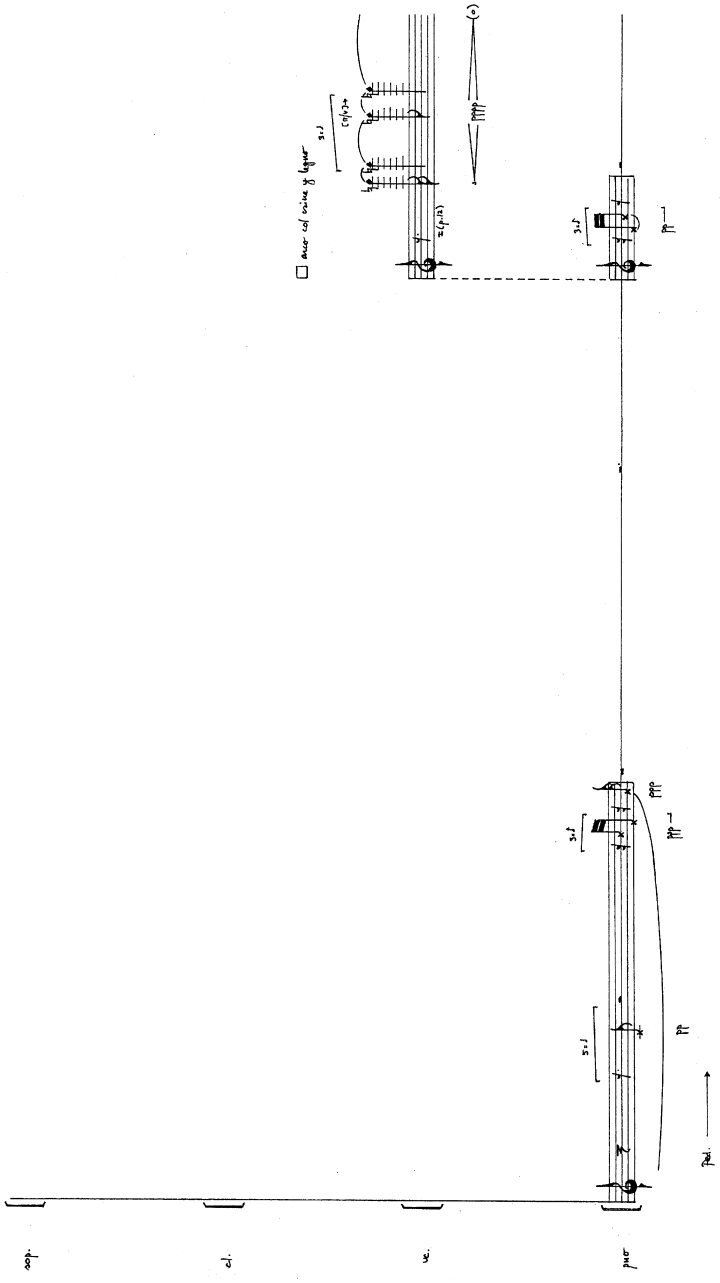

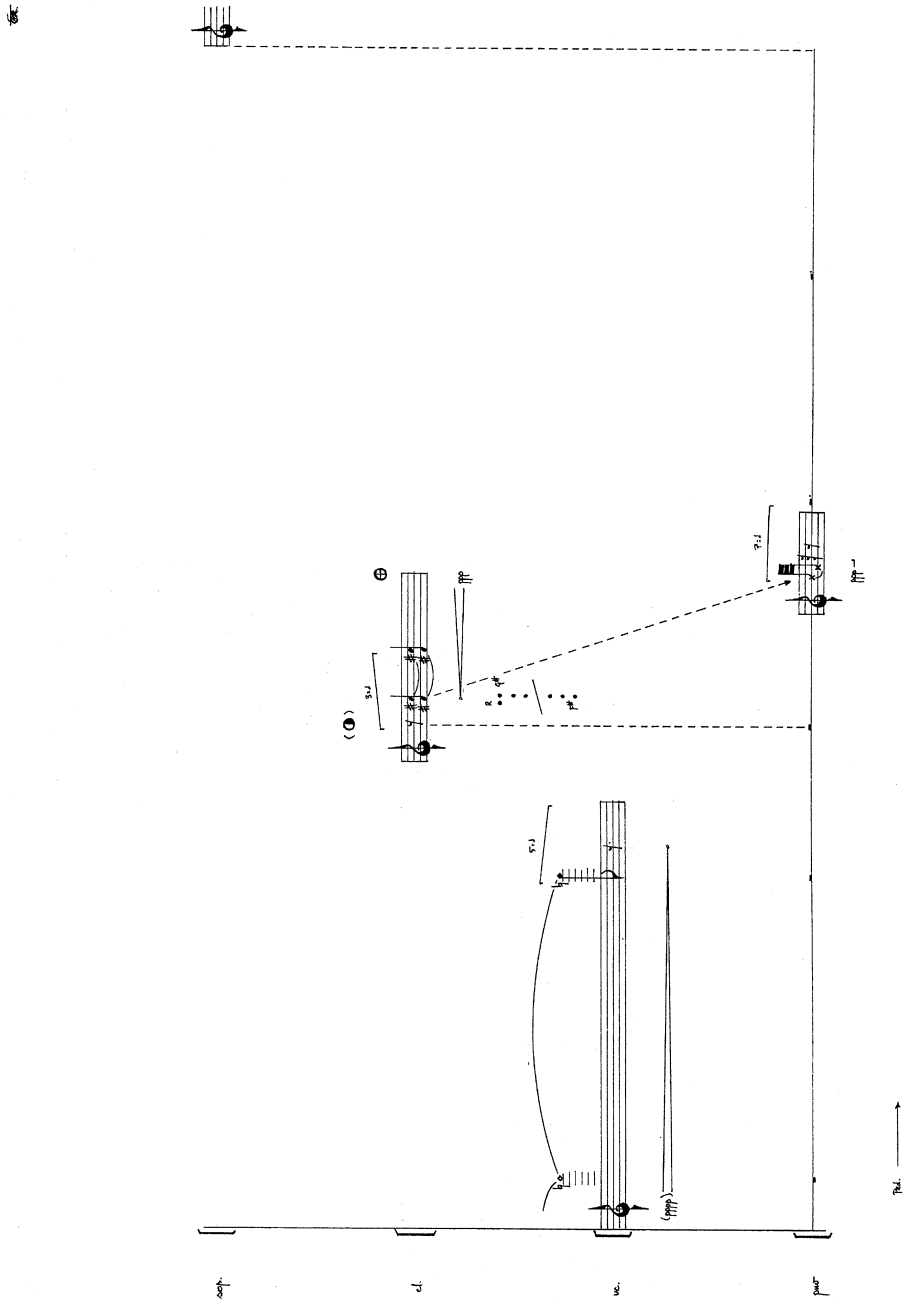

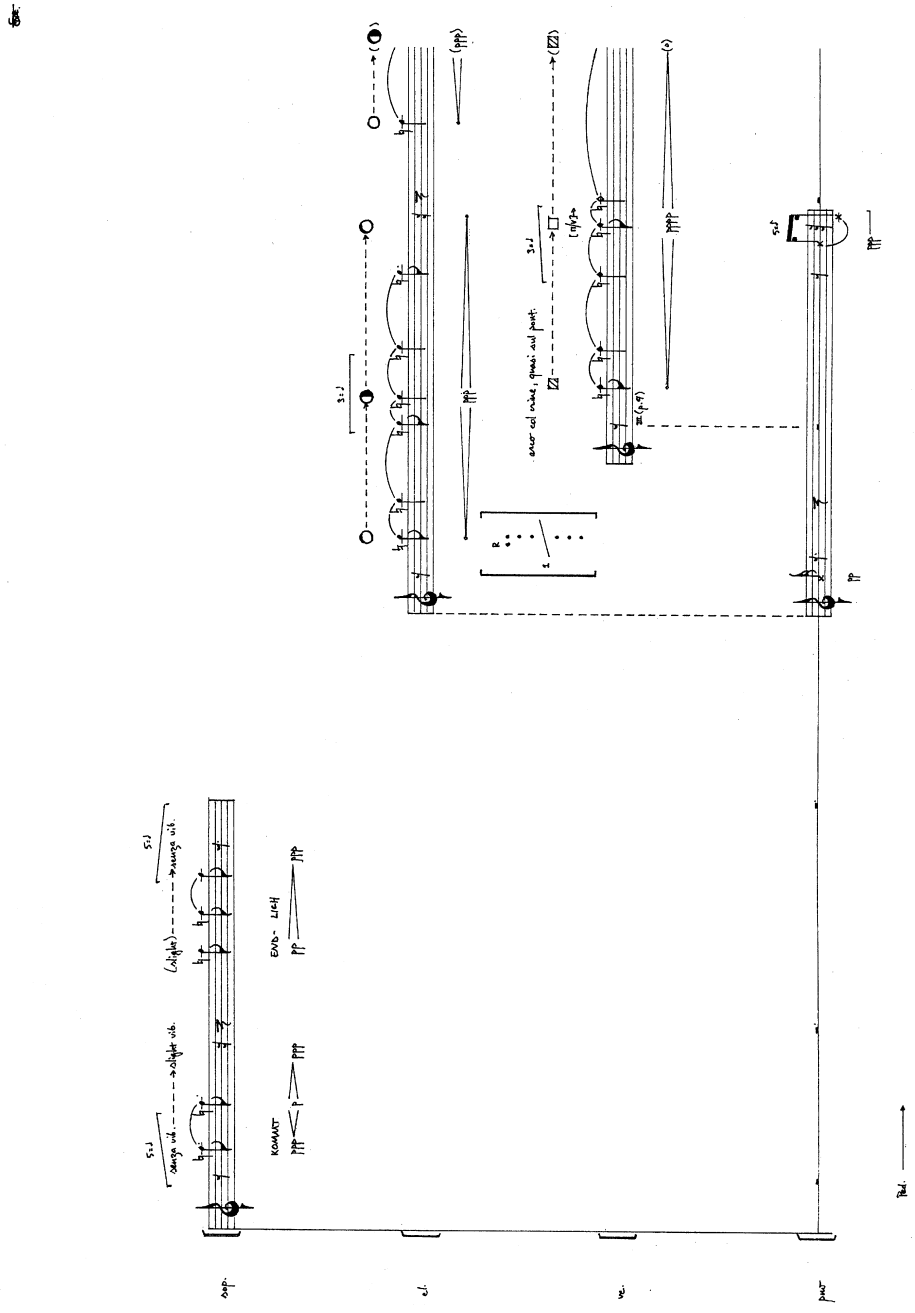

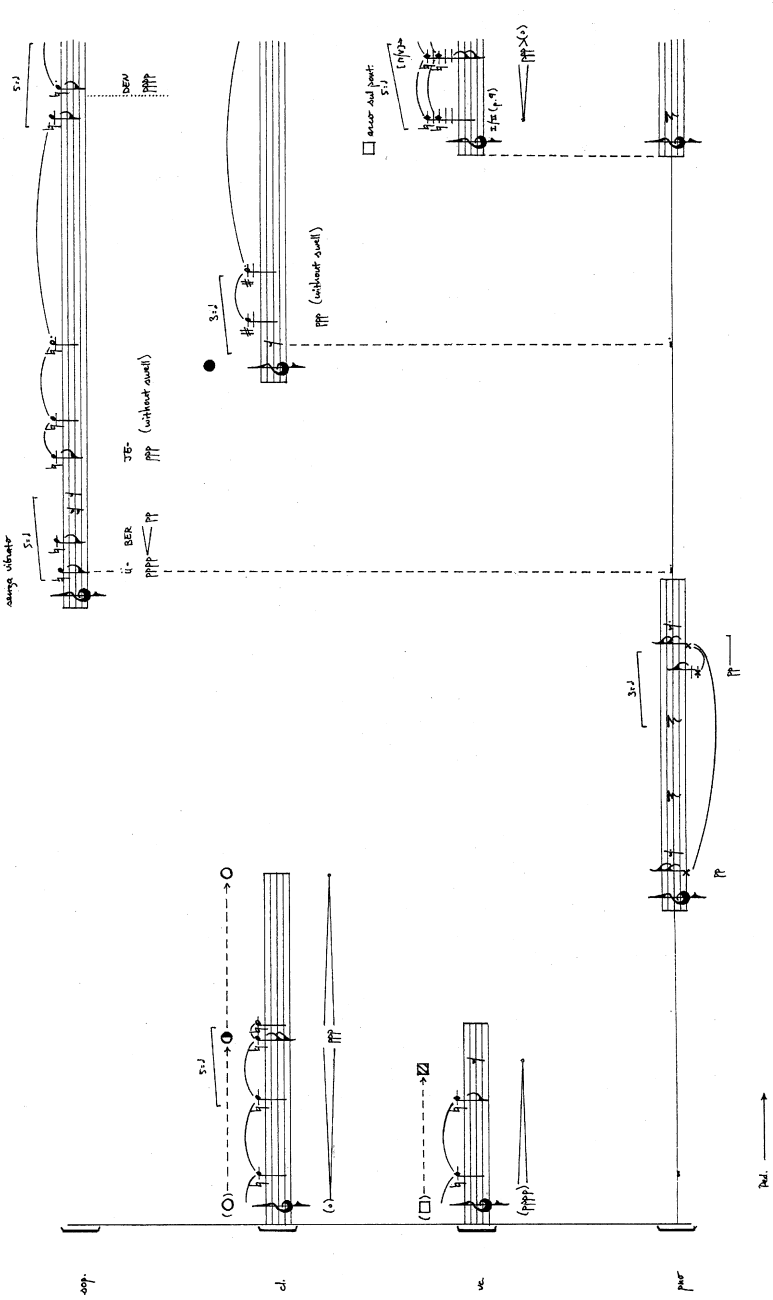

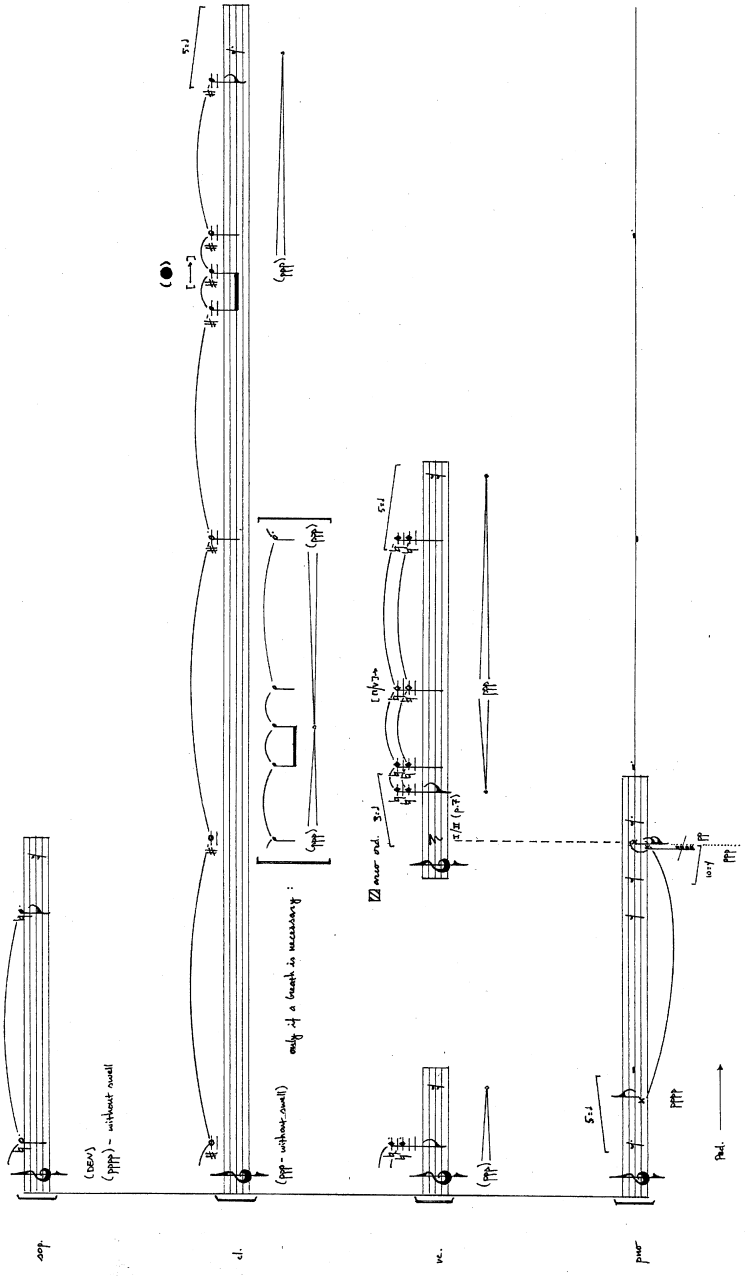
sop.
cl.
vc.
pmo
(DEN)
(pppp) - without swell
(ppp - without swell)
only if a breath is necessary :
5:1
3:1
10:1
Pad.

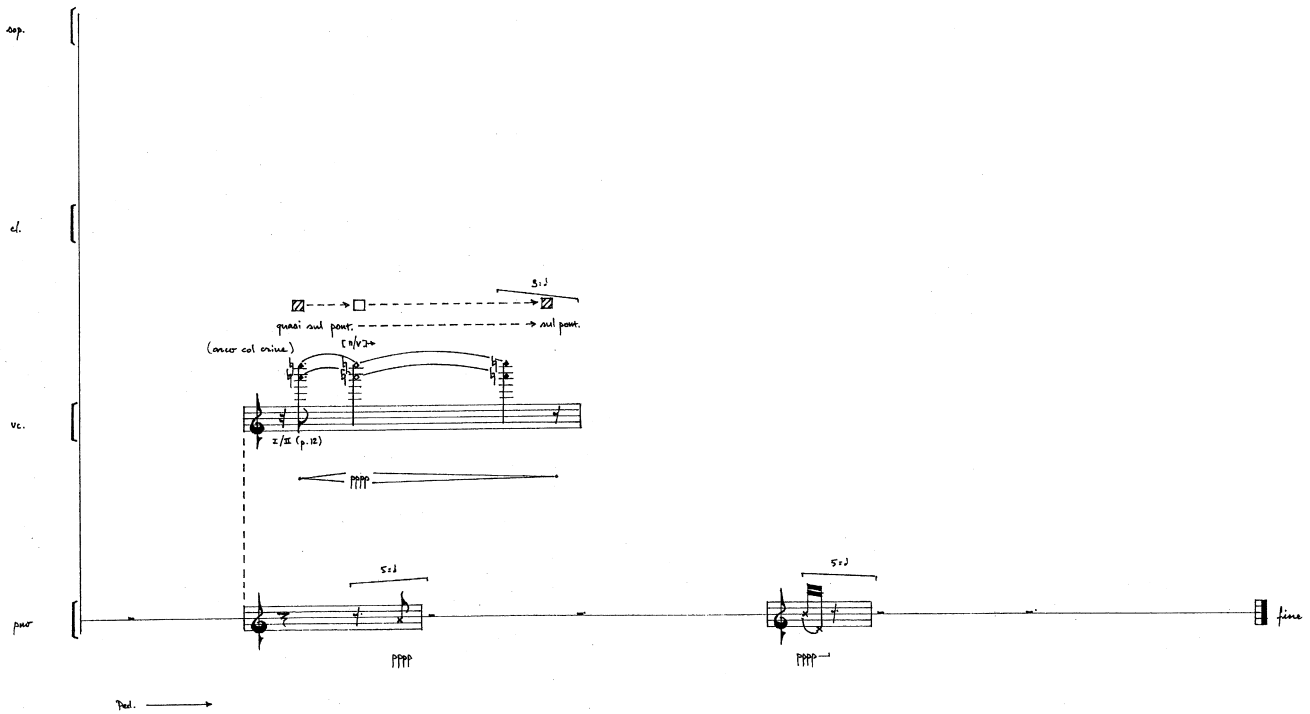

Let all sound fade completely, then release pedal abruptly.

SCORE NO. 3

a quiet and lingering violence

For alto saxophone in E-flat and accordion / piano

2008

REGARDING THE NOTATION:

NORMAL SAXOPHONE TONE

BREATHY SAXOPHONE TONE

WIND ONLY

PRECISELY-FINGERED QUARTER-TONES

MICROTONAL INFLECTION WITH EMBOUCHURE

IMMEDIATELY SILENCE SAXOPHONE / ACCORDION

8' ACCORDION REGISTRATION

8'+4' ACCORDION REGISTRATION

8' TREMULANT

a quiet and lingering violence

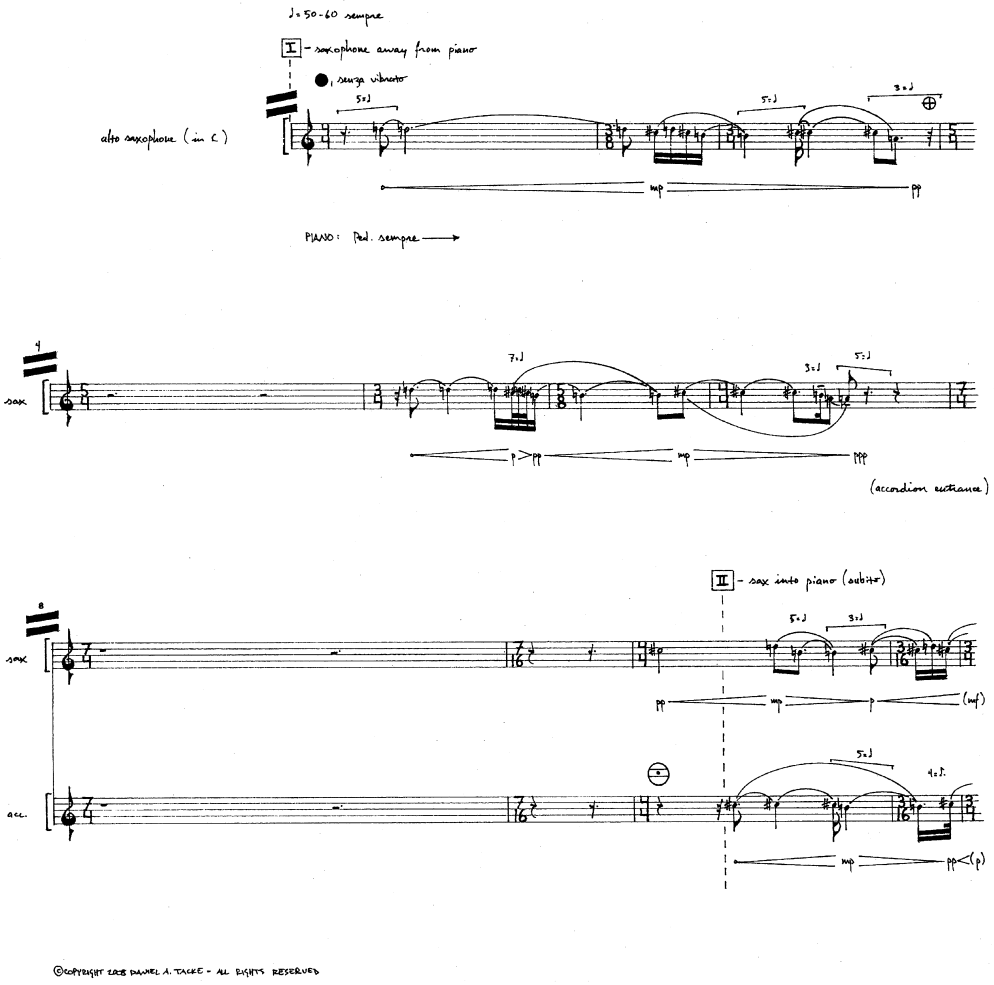

©COPYRIGHT 2018 DANIEL A. TACKE - ALL RIGHTS RESERVED

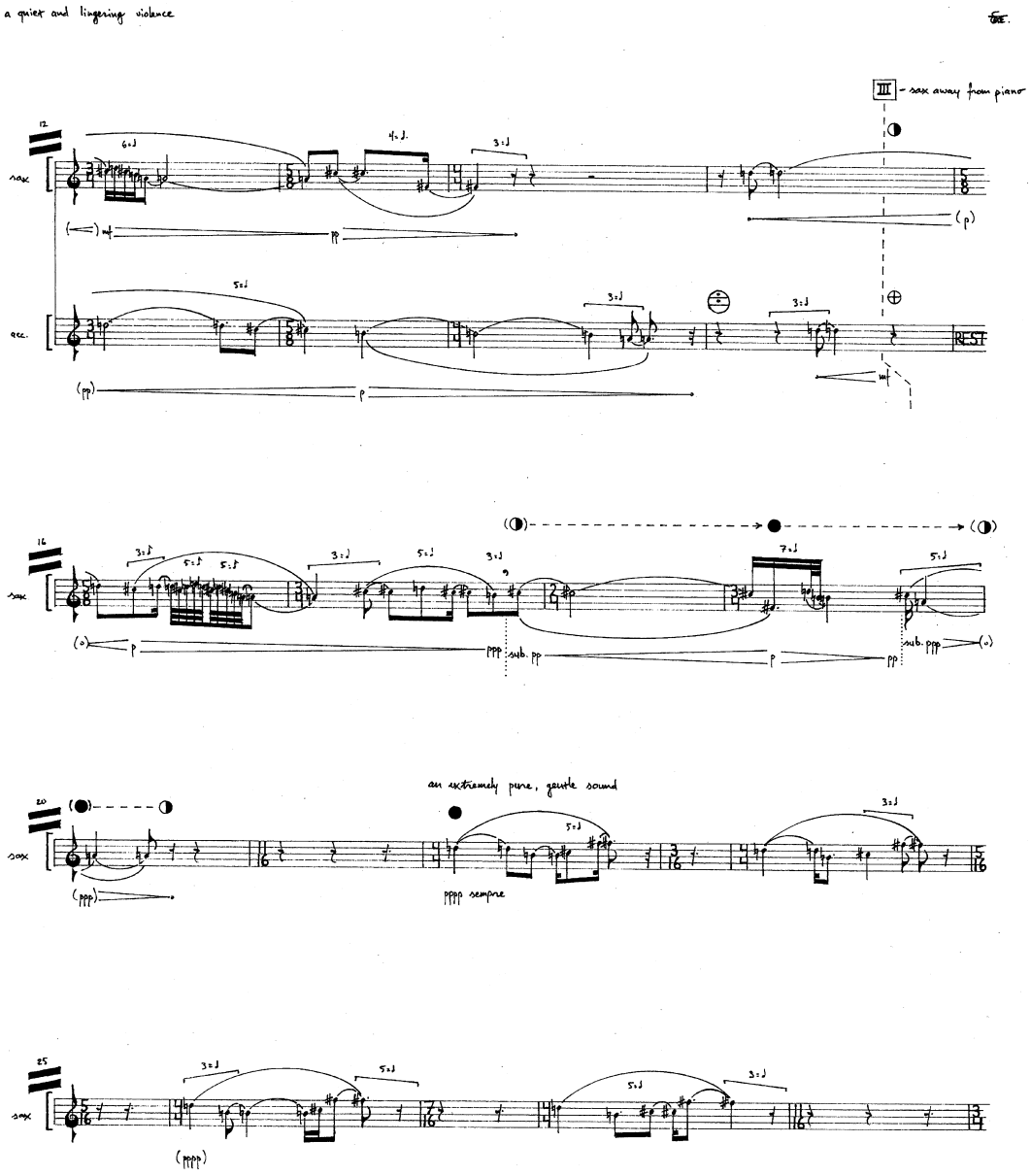
a quiet and lingering violence
III - sax away from piano
sax
acc.
REST
an extremely pure, gentle sound
pppp sempre

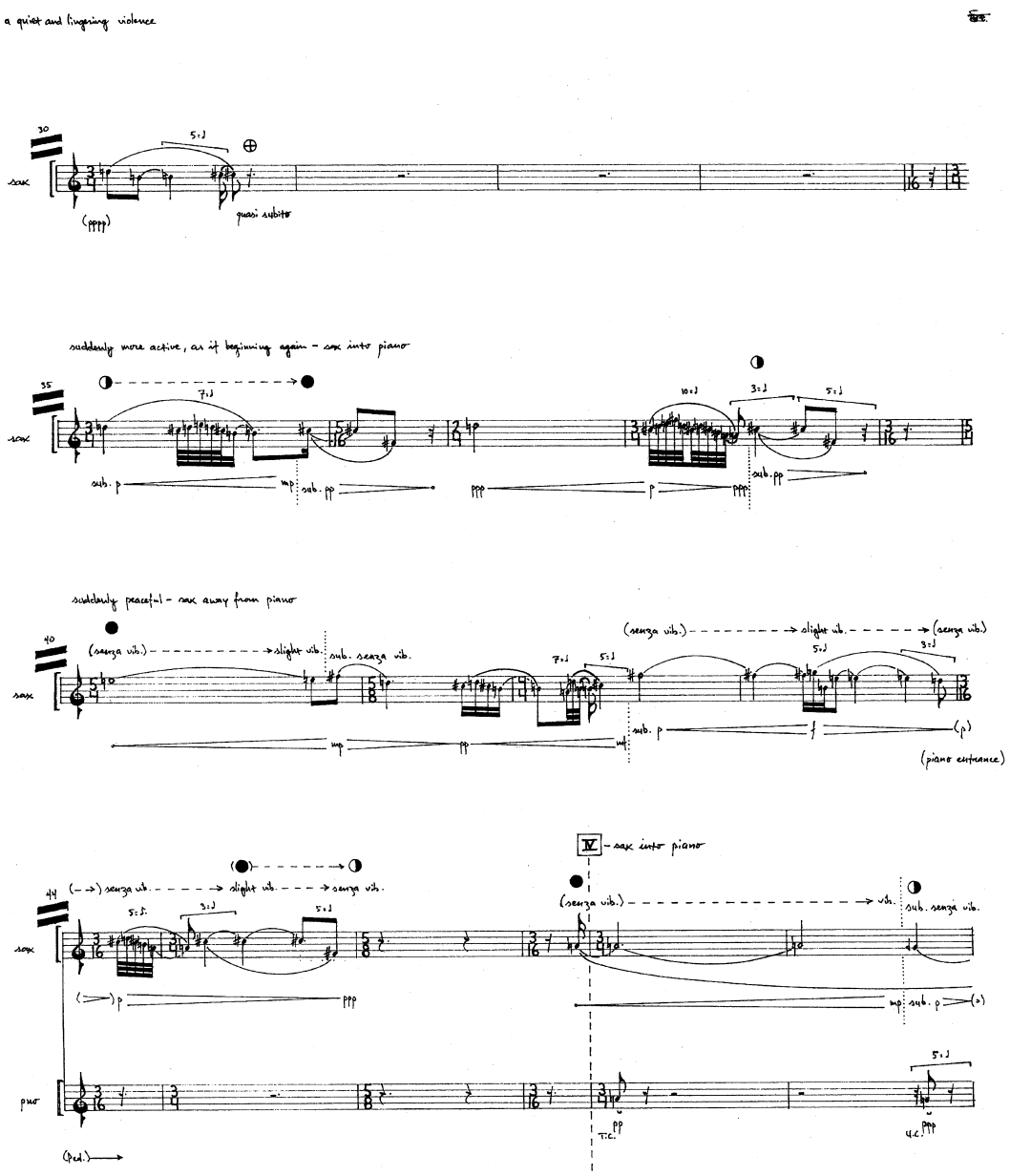
a quiet and lingering violence
30
sax
(ppp)
quasi subito
suddenly more active, as if beginning again - sax into piano
35
sax
sub. p
mp
sub. pp
ppp
p
ppp
sub. pp
suddenly peaceful - sax away from piano
40
sax
(senza vib.)
slight vib.
sub. senza vib.
(senza vib.)
slight vib.
(senza vib.)
sub. p
mp
pp
mf
(p)
(piano entrance)
IV - sax into piano
44
sax
(senza vib.)
slight vib.
senza vib.
(senza vib.)
vib.
sub. senza vib.
p
ppp
mp
sub. p
(o)
piano
T.C.
pp
U.C.
ppp
(Ped.)

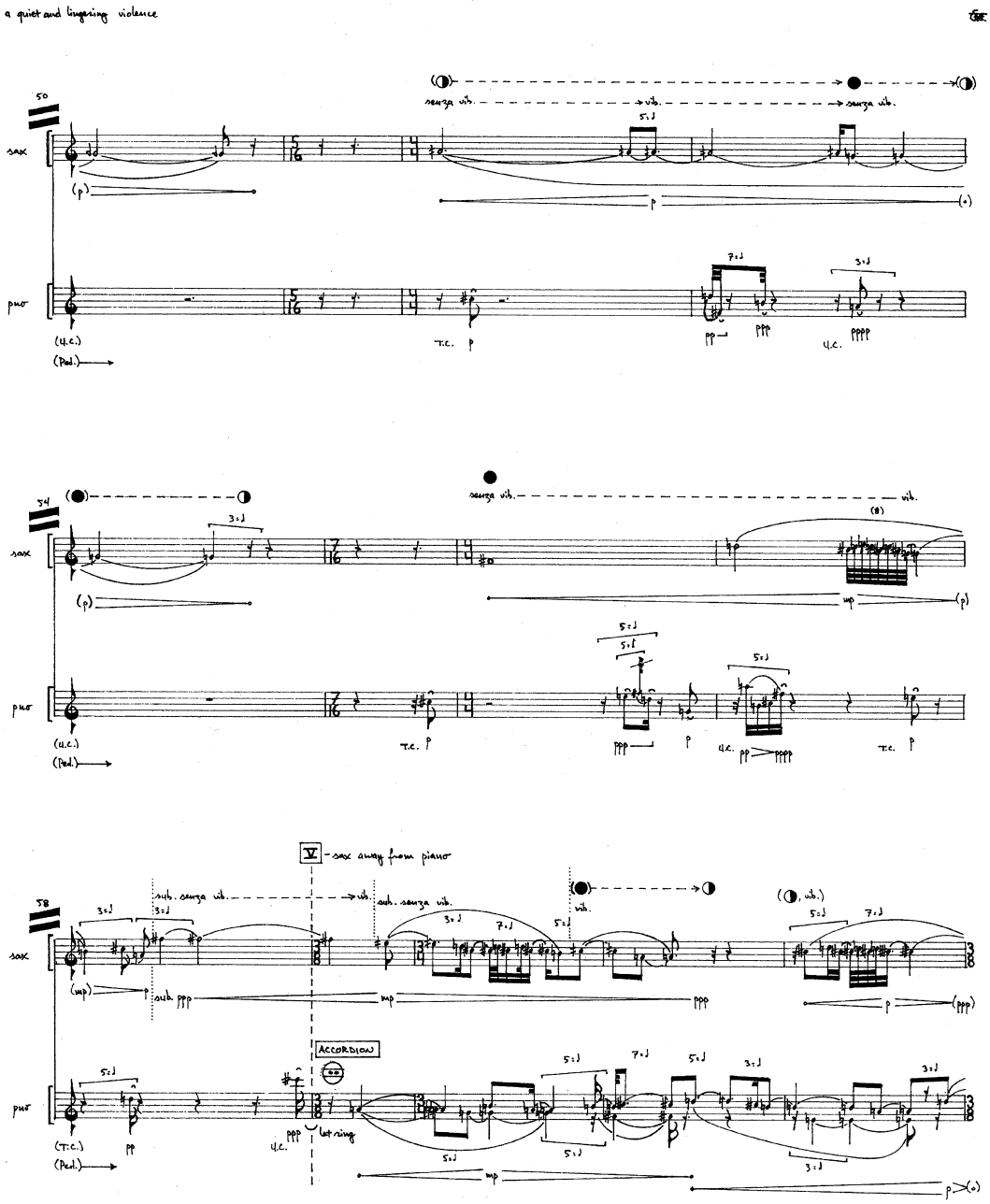
a quiet and lingering violence
50
sax
pno
senza vib.
vib.
(p)
p
(u.c.)
(Ped.)
T.C.
pp
ppp
pppp
54
mp
58
V - sax away from piano
sub. senza vib.
ACCORDION
let ring
(mp)
(T.C.)

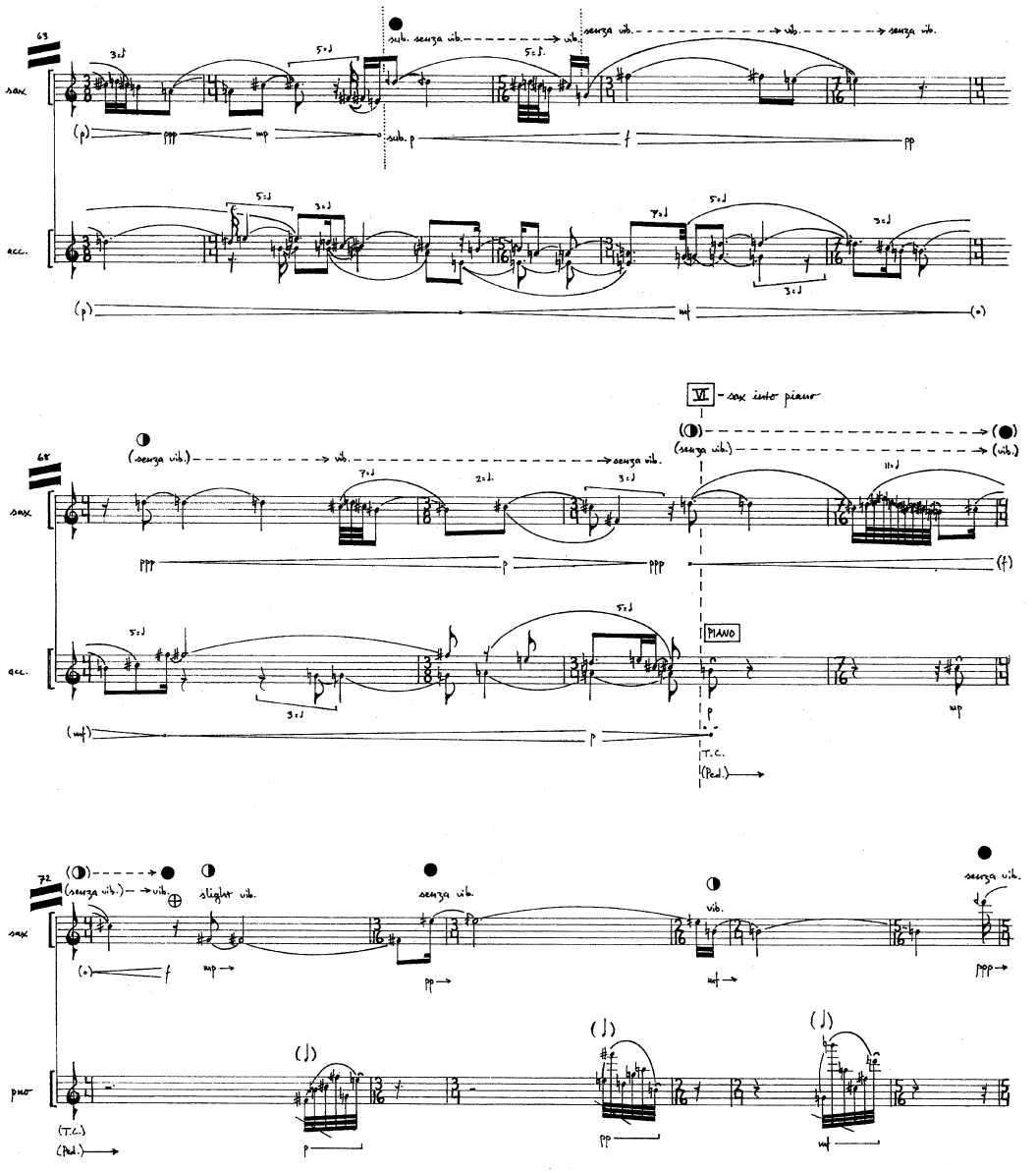
a quiet and lingering violence
63
sax
acc.
sub. senza vib.
vib.
senza vib.
VI - sax into piano
68
(senza vib.)
(vib.)
PIANO
T.C.
(Ped.)
72
slight vib.
senza vib.
vib.
pno
(T.C.)
(Ped.)

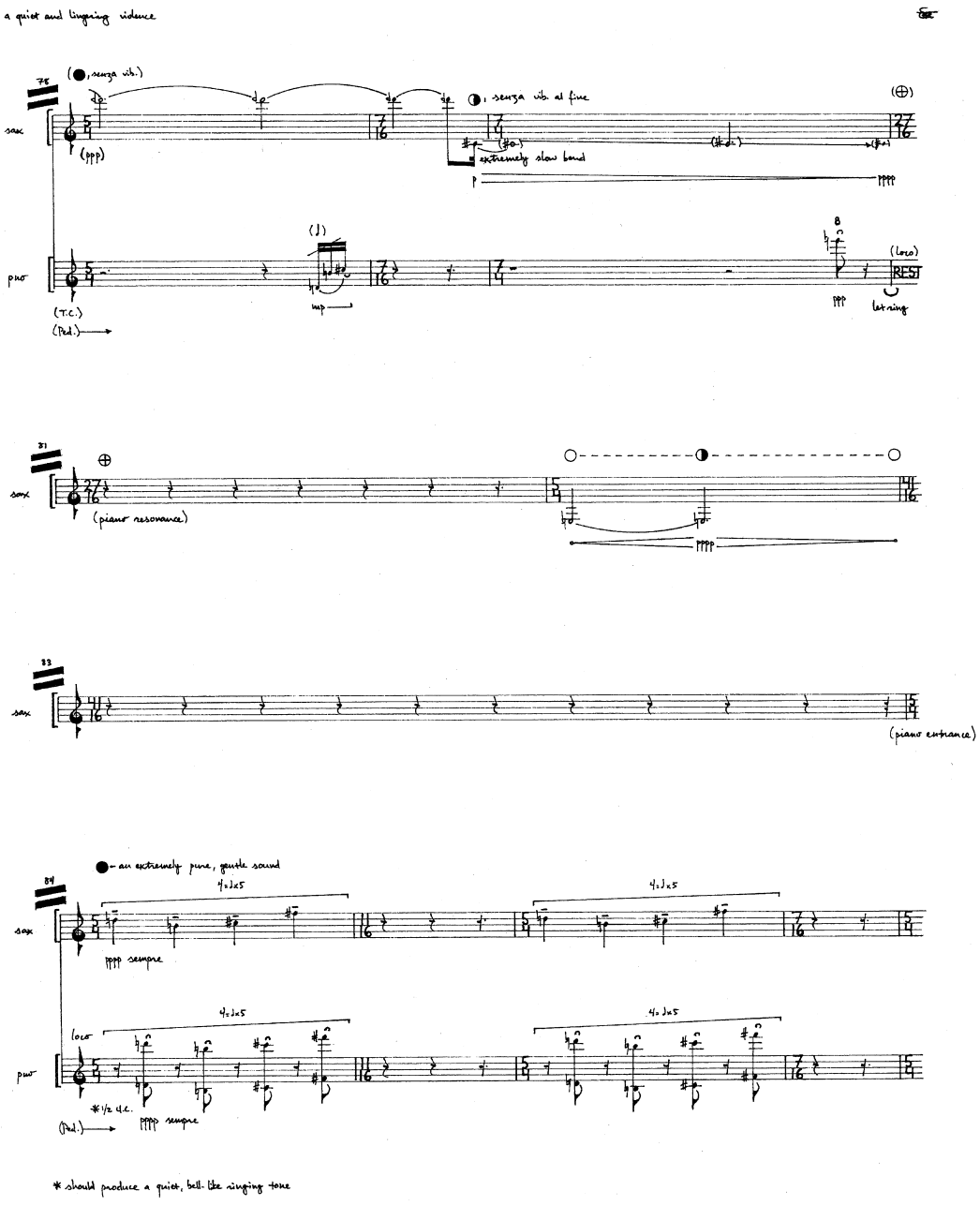
a quiet and lingering violence
78
(●, senza vib.)
sax
(ppp)
◑, senza vib. al fine
extremely slow bend
p
pppp
(⊕)
pno
(T.C.)
(Ped.)
mp
8
ppp
(loco)
REST
let ring
81
sax
(piano resonance)
pppp
83
sax
(piano entrance)
84
● – an extremely pure, gentle sound
4=♩x5
sax
pppp sempre
loco
pno
*1/2 u.c.
(Ped.)
pppp sempre
* should produce a quiet, bell-like ringing tone

a quiet and lingering violence

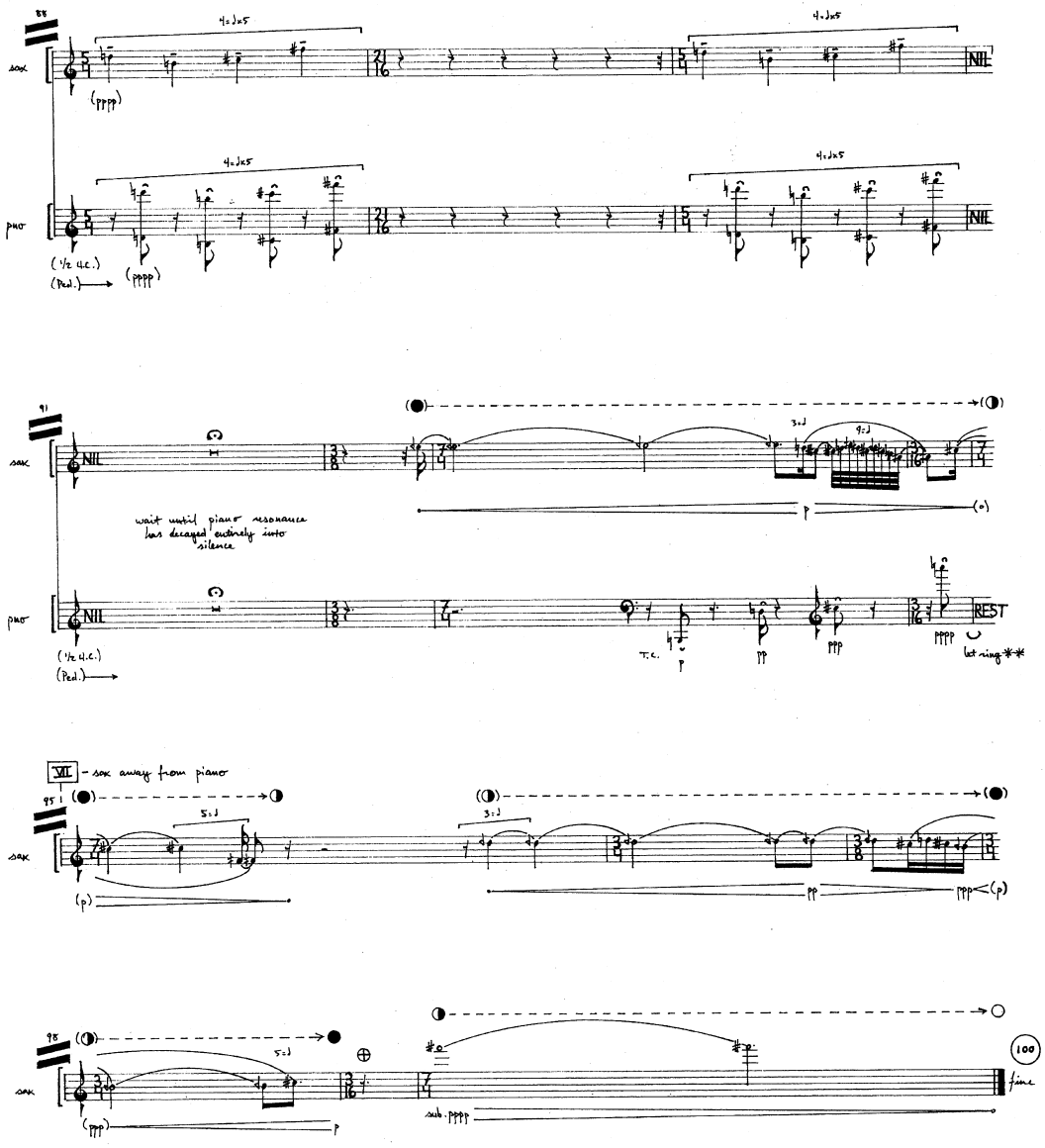

** continue to hold the pedal through the end of the piece – after the saxophone has finished allow all sound to decay naturally into silence, then release.

26 January 2008 in San Diego