Title
Design and performance of a Soft X-ray Interferometer for Ultra-High Resolution Fourier Transform Spectroscopy

Journal
Journal of Electron Spectroscopy and Related Phenomena, 80(MAY)

Author
Moler Jr., E.J.

Publication Date
1995-08-24

LBL-37711
UC-410

Lawrence Berkeley Laboratory
UNIVERSITY OF CALIFORNIA

Accelerator & Fusion Research Division

Presented at the 11th International Conference on Vacuum Ultraviolet Radiation Physics, Tokyo, Japan, August 27–September 1, 1995, and to be published in the Proceedings

Design and Performance of a Soft X-Ray Interferometer for Ultra-High Resolution Fourier Transform Spectroscopy

E.J. Moler, Z. Hussain, R.M. Duarte, and M.R. Howells

August 1995

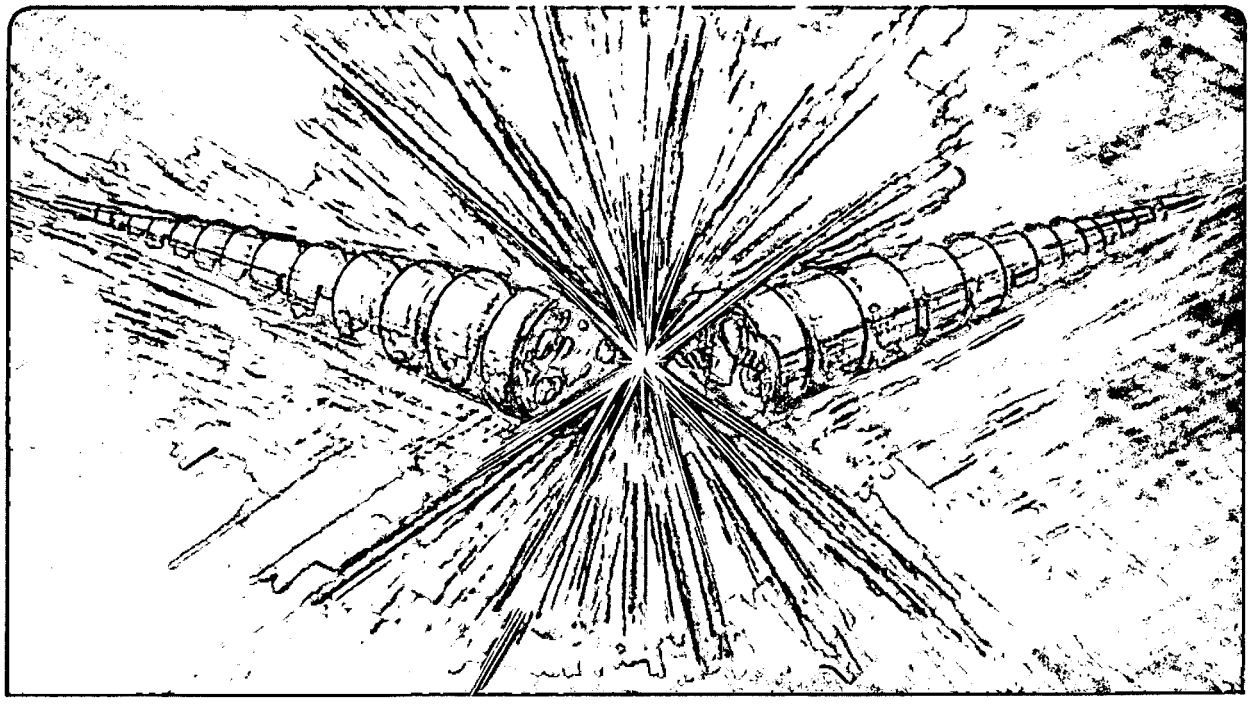

Prepared for the U.S. Department of Energy under Contract Number DE-AC03-76SF00098

DISCLAIMER

LBL-37711
LSBL-279
UC-410

DESIGN AND PERFORMANCE OF A SOFT X-RAY INTERFEROMETER FOR ULTRA-HIGH RESOLUTION FOURIER TRANSFORM SPECTROSCOPY*

E.J. Moler[a,b], Z. Hussain[a], R.M. Duarte[a], M.R. Howells[a]

[a]Advanced Light Source
Lawrence Berkeley National Laboratory
University of California
Berkeley, CA 94720

[b]The University of California
Department of Chemistry
Berkeley, CA 94720

Paper submitted at the 11th International Conference on Vacuum Ultraviolet Radiation Physics, Tokyo, Japan, August 27 - September 1, 1995

*This work was supported by the Director, Office of Energy Research, Office of Basic Energy Sciences, Materials Sciences Division, of the U.S. Department of Energy, under Contract No. DE-AC03-76SF00098.

LSBL- 279

Light Source Note:
Author(s) Initials EJM Date
Group Leader's initials HAP 8-24-95 Date

Design and Performance of a Soft X-ray Interferometer For Ultra-high Resolution Fourier Transform Spectroscopy

E.J. Moler,[a,b] Z. Hussain,[a] R.M. Duarte,[a] M. R. Howells,[a]
[a]Lawrence Berkeley National Laboratory, Berkeley, CA 94720
[b]EJMOLER@LBL.GOV, The University of California, Dept. of Chemistry, Berkeley, CA 94720

A Fourier Transform Soft X-ray spectrometer (FT-SX) has been designed and is under construction for the Advanced Light Source (ALS) at Lawrence Berkeley National Laboratory as a branch of beamline 9.3.2. The spectrometer is a novel soft x-ray interferometer designed for ultra-high resolution (theoretical resolving power $E/\Delta E \sim 10^6$) spectroscopy in the photon energy region of 60-120 eV. This instrument is expected to provide experimental results which sensitively test models of correlated electron processes in atomic and molecular physics. The design criteria and consequent technical challenges posed by the short wavelengths of x-rays and desired resolving power are discussed. The fundamental and practical aspects of soft x-ray interferometry are also explored.

1. INTRODUCTION AND SCIENTIFIC MOTIVATION

Correlated electron motion is at the center of any chemical process and thus constitutes a very important arena of basic scientific research. The many-body nature of the problem precludes analytical solutions leaving only approximations to the quantum problem potentially tractable. The central problem in theoretical electron correlation studies is to find the appropriate approximations that describe all of the main characteristics of the experimentally observed features of such systems. It is natural to start with excitations of the helium atom since this is the simplest correlated electron system and, with the availability of synchrotron radiation sources, increasingly detailed experimental observations have become available. The FT-SX spectrometer has been designed to probe this prototypical system with unprecedented resolving power. Of particular interest are the regions of overlapping double excitation series where classically chaotic behavior is mixed with quantization effects [1].

2. SYNCHROTRON RADIATION AND RESOLUTION LIMITS OF STANDARD SOFT X-RAY MONOCHROMATORS

Synchrotron radiation has proved to be an extremely useful tools in basic atomic and molecular physics studies. The high photon flux and tunable photon energy enables detailed studies of excitation processes which are considerably challenging to the theoretical physics community. Third generation light sources, such as the Advanced Light Source (ALS) at Lawrence Berkeley National Laboratory, coupled with high resolution beam lines are providing extremely detailed observations of scientifically important systems such as the helium double excitation series, a correlated electron system, in the soft x-ray range. However, there is more to be gained with increased resolving power in x-ray absorption experiments.

The highest resolving power soft x-ray beam lines available consist of a low emittance synchrotron source and a highly optimised, grating based monochromator, usually a Spherical Grating Monochromator (SGM). The low emittance source allows for relatively high photon flux while using the small aperatures necessary to operate the SGM at maximum resolving power. While the claim of experimentally achieved resolving power can vary depending on the interpretation of the data and caution of the investigators, it is apparent that the theoretically maximum resolving power of a spherical grating monochromator [2], ($E/\Delta E \approx 50{,}000$) has been closely approached by Kaindle, et al. in the region of the helium double excitations (~ 65 eV)[3].

3. SOFT X-RAY INTERFEROMETRY AND ESSENTIALS OF FOURIER TRANSFORM SPECTROMETRY

To achieve a higher resolving power, a different approach must be used other than the "traditional" grating based monochromator. It has been known in optics for a long time that interferometers can

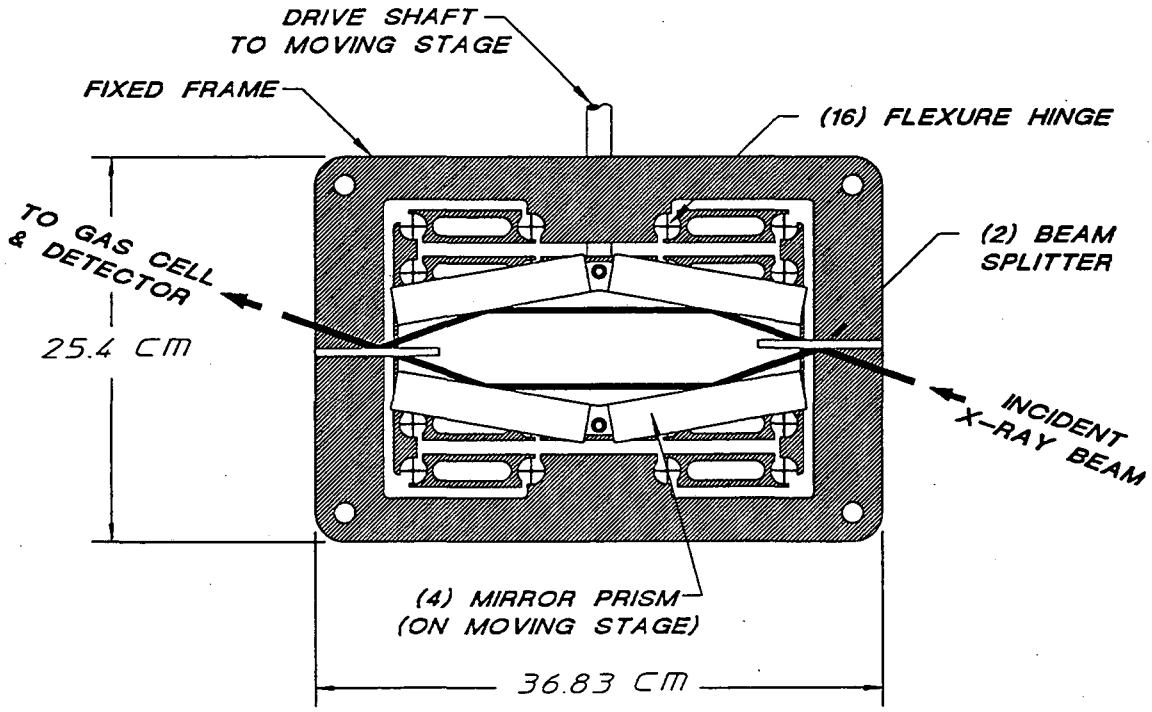

Figure 1. Schematic of Soft X-ray Interferometer.

always, in principle, outperform gratings in terms of maximum resolving power or phase space acceptance for equivalent resolving power[4]. In practice, interferometry with x-rays is very difficult due to the short wavelengths. It is only recently that the mechanical, optical, and metrological technology have advanced enough to practically build a soft x-ray interferometer for Fourier transform spectrometry.

The basic operation of a Fourier transform spectrometer is to split an incident beam into two parts and recombine them coherently after introducing a phase delay. The Fourier transform of the resulting interference pattern, as a function of phase delay or path-length difference, gives the energy spectrum of the incident beam. The Michelson interferometer, which is widely used in infra-red spectroscopy, is the most common example of such an instrument. The path-length-difference is introduced by moving one or more mirrors to vary the geometric distance between the beam splitter(s) and the detector. The key components of any interferometer are the beam splitters, which usually determine the optical aperature and operating range of an interferometer, and the mirror translation stage, which determine the maximum resolution of the instrument.

The resolution of any optical spectrometer depends on the maximum path length difference introduced between the various parts of the beam. More precisely,

$$\delta\nu = \frac{1}{2\Delta L}$$

where ΔL is the maximum path-length-difference introduced and $\delta\nu$ is the maximum resolution in wavenumber. If one can maintain the alignment of the mirrors to ensure proper overlap of the beams at the detector, the resolution of an interferometer can be arbitrarily small by simply increasing ΔL. A grating, on the other hand, has a limit to the

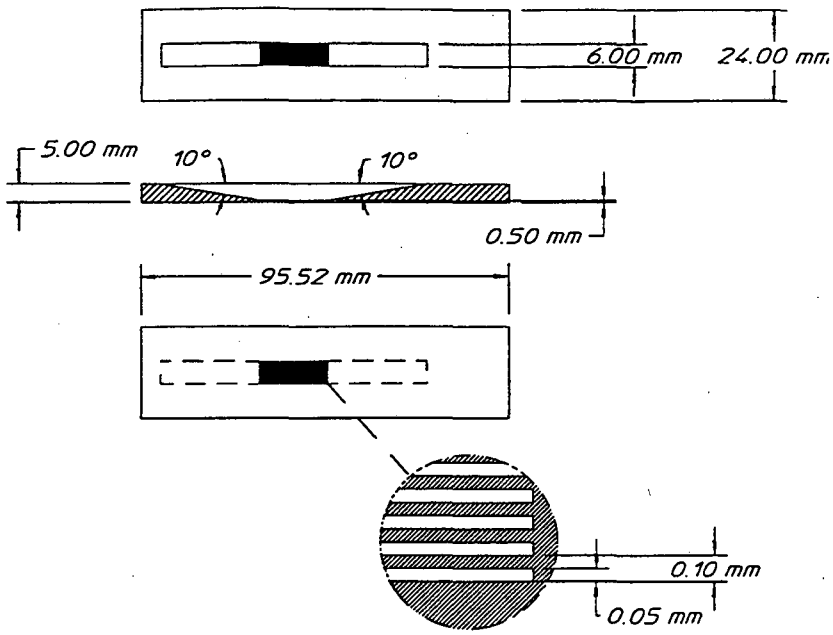

Figure 2. Silicon Beam Splitter

maximum path-length-difference which it can accomodate.

4. OVERVIEW OF FT-SX BRANCHLINE

The FT-SX spectrometer is a modified Mach-Zehnder type interferometer designed to operate in the 60-120 eV photon energy range (wavelength 10-20 nm) with a theoretical resolution of ~65 μeV.It is a permanent end-station branch of beamline 9.3.2 at the ALS. The synchrotron radiation is first pre-filtered by the SGM monochromator, operated in a moderate resolution mode with a 100 l/mm grating, to improve the signal/noise ratio of the absorption spectrum measured by the interferometer. The x-rays are then deflected by a simple plane mirror downstream of the monochromator exit slit then pass through the FT-SX spectrometer and a conventional gas ionization cell and impinge on a solid state detector. The entire interferometer is mounted in a high-vacuum chamber separated from the UHV beamline by a thin foil window. The vacuum vessel is mounted on an optical table to damp vibration. The moving mirror stage is driven by a double action, hydraulic piston which is external to the vacuum vessel. The mirror position in the interferometer is measured with a commercially available HEWLITT-PACKARD heterodyne laser interferometer with a resolution of 3 Å and an actual rms noise of 4.5 Å. Both the piston drive and the laser interferometer are mounted on the optical table. The heart of the spectrometer is a flexture-hinged linear motion stage upon which is mounted four mirrors permanently aligned by optical contacting to a custom, high precision prism.

5. SOME TECHNICAL CHALLENGES AND SOLUTIONS

A detailed discussion of the design and specification considerations for a soft x-ray interferometer is beyond the scope of this paper. Here we present just a few of the key features of the FT-SX spectrometer.

BEAM SPLITTERS

Beam splitters for soft x-rays are not readily available. We have chosen to use a wavefront dividing beamsplitter which is essentially an x-ray quality mirror with slots. The difficulty in fabricating such a device is to maintain a tolerable slope error on the reflecting parts (flatness <1 μrad and surface roughness ~3 Å rms) while creating

slots which are small enough to allow coherent splitting of the incident x-ray beam. Additionally, the thin "bars" of mirror left between the slots must have an optical coating to achieve reasonable reflectivity. Based on the coherence properties of the incident x-ray beam we determined a slot width of 50 μm and a period of 100 μm was sufficient to split the x-ray beam coherently. The scheme developed to fabricate the beam splitters is as follows:

a) a single crystal Si wafer is polished to an x-ray quality finish with a specific orientation relative to the (110) crystal plane.

b) the back side of the wafer is ultrasonically machined to thin the center of the wafer where the slots will be and to cutout chamfers to allow the grazing incident x-rays to pass through the slots.

c) the wafer is masked and the slots are chemically etched with an etchant that preferentially cuts along the [110] direction.

d) the optical coating is applied in a manner to maintain a stress free thin film. For the ALS spectrometer we have selected molybdenum.

The beam splitters have been successfully fabricated by Rockwell Power Systems Division of Rockwell International.

THE MECHANICAL MIRROR STAGE

The mirror stage must allow enough motion to introduce the desired path-length-difference between the two halves of the x-ray beams and must maintain an angular alignment which ensures coherent recombination of the two beams at the detector. For the FT-SX spectrometer the total range of motion is ~ 1 cm and the angular tolerance is ±0.1 arc-seconds across the entire range. We have achieved this by using "cartwheel" type flexural hinges (see fig. 1) which were wire-EDM cut from a monolithic maraging steel slab.

6. CONCLUSION

An FT-SX spectrometer is currently under construction at the Advanced Light Source at Lawrence Berkeley National Laboratory. The technical challenges posed by the short wavelength of the x-rays and the desired, ultra-high resolving power have been met using state-of-the-art mechanical, optical, and metrological technology. We believe this general scheme may be adapted to other uses such as high throughput and high resolving power x-ray flourescence spectrometers.

ACKNOWLEDGEMENTS

We wish to thank the ALS designers, engineers, and technicians. This work was supported by U.S. DOE contract number DE-AC03-76SF00098.

REFERENCES

1. Domke, M., *et al.*, *Extensive Double-Excitation States in Atomic Helium.* Physical Reveiw Letters, 1991. **66**: p. 3441-3443.

2. Kaindl, G.K., *et al.*, Synchrotron Radiation News, 1995. (June).

3. Kaindl, G.K., *Personal Communication,* 1995.

4. Chamberlain, J., *The Principles of Interferometric Spectroscopy*. 1979, Chichester: John Wiley and Sons.

LAWRENCE BERKELEY NATIONAL LABORATORY
UNIVERSITY OF CALIFORNIA
TECHNICAL & ELECTRONIC INFORMATION DEPARTMENT
BERKELEY, CALIFORNIA 94720