Lawrence Berkeley National Laboratory
Recent Work

Title

FOURIER TRANSFORM INFRARED SPECTROMETER AND AUTOMATED SAMPLE CHANGING APPARATUS

Permalink

https://escholarship.org/uc/item/1qn500k3

Authors

Pollard, M.
Jaklevic, J.

Publication Date

1988-04-01

eScholarship.org Powered by the California Digital Library
University of California

LBL-24972
UC-402

Lawrence Berkeley Laboratory
UNIVERSITY OF CALIFORNIA

RECEIVED
LAWRENCE
BERKELEY LABORATORY
AUG 2 1988
LIBRARY AND
DOCUMENTS SECTION

Engineering Division

Fourier Transform Infrared Spectrometer and Automated Sample Changing Apparatus

M. Pollard and J. Jaklevic

April 1988

TWO-WEEK LOAN COPY
This is a Library Circulating Copy
which may be borrowed for two weeks.

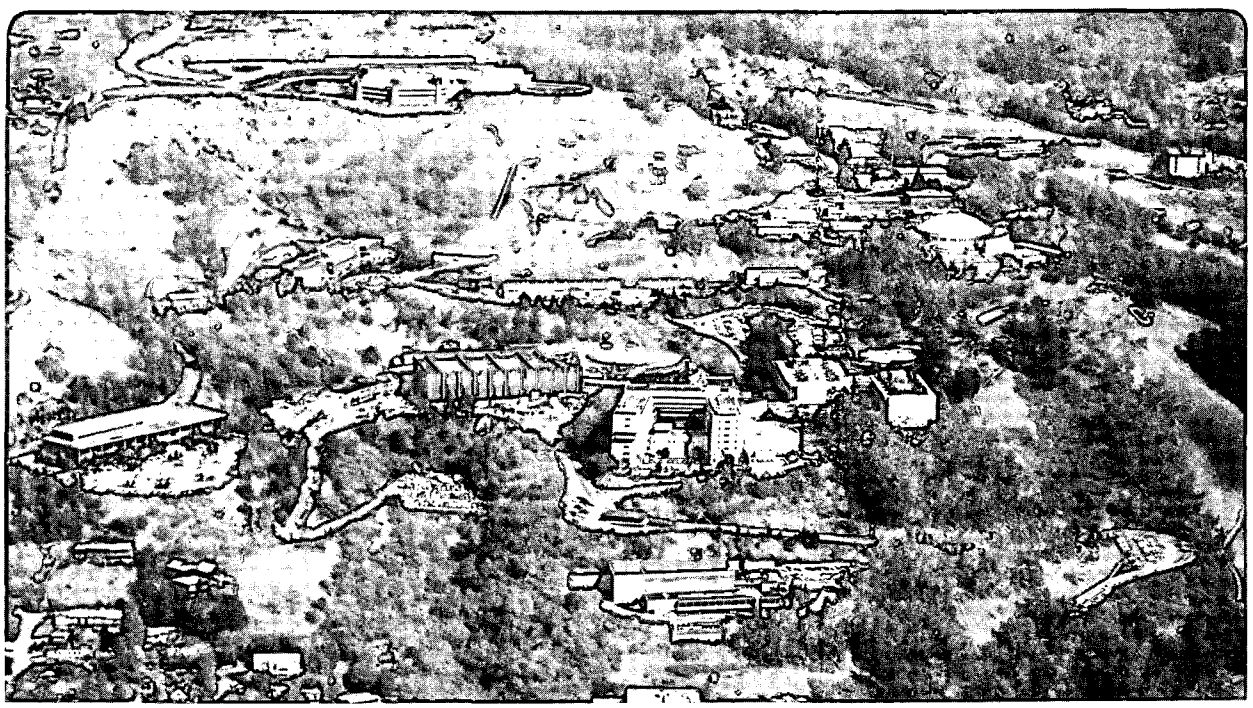

Prepared for the U.S. Department of Energy under Contract Number DE-AC03-76SF00098.

LBL-24972
c.2

DISCLAIMER

This document was prepared as an account of work sponsored by the United States Government. While this document is believed to contain correct information, neither the United States Government nor any agency thereof, nor the Regents of the University of California, nor any of their employees, makes any warranty, express or implied, or assumes any legal responsibility for the accuracy, completeness, or usefulness of any information, apparatus, product, or process disclosed, or represents that its use would not infringe privately-owned rights. Reference herein to any specific commercial product, process, or service by its trade name, trademark, manufacturer, or otherwise, does not necessarily constitute or imply its endorsement, recommendation, or favoring by the United States Government or any agency thereof, or the Regents of the University of California. The views and opinions of authors expressed herein do not necessarily state or reflect those of the United States Government or any agency thereof or the Regents of the University of California.

LBL - 24972

FOURIER TRANSFORM INFRARED SPECTROMETER AND AUTOMATED SAMPLE CHANGING APPARATUS

by

Martin Pollard and Joseph Jaklevic
Engineering Division
University of California
Lawrence Berkeley Laboratory
Berkeley, CA 94720

Interagency Agreement No. EPA-IAG-DW89931232-01-1

Project Officer
William McClenny
Environmental Sciences Research Laboratory
U.S. Environmental Protection Agency
Research Triangle Park, NC 27711

April, 1988

ABSTRACT

A commercial Fourier transform infrared spectrometer was modified for automated analysis of Teflon* air filters by the addition of a sample changing compartment capable of positioning up to 40 filters for analysis. Software was developed to automatically position the filter samples, control data acquisition, and analyze the resultant data using spectral analysis together with empirical calibration curves. Both the hardware and software developments are described.

CONTENTS

Abstract ii
Figures v
Acknowledgement vi

1. Introduction 1
2. Conclusions 3
3. Recommendations 4
4. Description of the Instrument 5
   Overall view of the instrument 5
   Detailed description of the instrument components 5
      Teflon* sample filters 9
      Sample carousel 9
      Sample compartment 9
      Sample compartment components 9
      BASICON microcontroller 13
      Fourier transform infrared spectrometer 14
5. Nicolet* Computer Programming Environment 16
   Hard disk directory structure 16
   Software development 16
      The NICOS operating system 18
      The TED text editor 18
      The DX command mode 18
      The DXMENU mode 18
      The MACRO editor 18
      FORTH programming 19
      Customized DX command program - DXAEROSOL1 20
      Useful DX commands 23
      Miscellaneous programming information 24
6. The BASICON Microcontroller 26
   Overall description of the BASICON microcontroller 26
   The EPROM microcontroller program description 27
   Programming the BASICON MC-2N 28
   MC-2N programming hints 29
7. Installation Procedures 30
   Assembly 30
      Main compartment assembly 30
      Interior sample compartment assembly 30
      Cable connections 31
   Power-on procedures 32
   Mirror alignment 32
   Sample compartment test 35

(continued)

CONTENTS (continued)

8. Operating Procedures 37
9. Maintenance 38
Routine maintenance procedures 38
Simple repair procedures 38
Lamp replacement 38
Laser replacement 38
Laser gain adjustment 39
10. Technical Assistance 41
11. Source Code Listings 42
Nicolet* FTIR computer program listings 42
STARTUP 42
CHGIN.4TH 44
CHGOUT.4TH 46
PROGRS 49
INT 53
TIMECLOCK 56
HELPMEAS 58
SCANFILTERS 60
ANALYZE 63
BASICON source code listings 73
BASICON BASIC program 73
BASICON machine code subroutines 75
12. Circuit Board Schematics 79
13. Major Components and Manuals 82

References 85
Bibliography 86

FIGURES

Number		Page
4-1	Fourier transform infrared spectrometer and sample changer compartmentt	6
4-2	Sample changer compartment with sample carousel	7
4-3	Sample changer compartment without sample carousel	8
4-4	Schematic of sample changer compartment	10
4-5	Schematic of FTIR optical bench	11
5-1	Nicolet* computer software environment	17
7-1	Interior of FTIR optical bench	33
7-2	System cable connections	34
9-1	Laser gain test point	40
12-1	Stepper motor circuit board schematic	80
12-2	Cable interface card circuit schematic	81

ACKNOWLEDGMENTS

The authors would like to acknowledge the contribution of William Searles who did much of the design and construction of the sample compartment. We would also like to acknowledge William McClenny for helpful advice and his support during this project.

*Reference to a company or product name does not imply approval or recommendation of the product by the University of California, the U.S. Environmental Protection Agency, or the U. S. Department of Energy to the exclusion of others that may be suitable.

This report was submitted in fulfillment of Contract No. EPA-IAG-DW89931232-01-1 by the Lawrence Berkeley Laboratory under the sponsorship of the U.S. Environmental Protection Agency. This report covers the period May 1985 to December 1987.

Although the research described in this report has been funded wholly or in part by the U.S. Environmental Protection Agency through an Interagency Agreement No. IAG-DW89931232-01-1 with the U.S. Department of Energy under Contract No. DE-AC03-76SF00098, it has not been subjected to Agency review and therefore necessarily reflect the views of the Agency and no official endorsement should be inferred.

SECTION 1

INTRODUCTION

Current atmospheric monitoring methods include the sampling and collection of aerosols on filters with subsequent chemical analysis of the samples. Teflon* membrane filters have become a very common medium for particle collection because they have a number of advantageous physical characteristics. The low elemental background contamination of Teflon* has made this an ideal substrate for x-ray fluorescence analysis of particles. The low mass per unit area makes this a good substrate for beta gauge mass analysis of air samples. Teflon* filters provide a sturdy, porous, hydrophobic, and inert substrate. Chemical artifact formation due to the filter is extremely low for the major compounds of interest in air analysis such as ammonium, sulfate, and nitrate (Appel, 1980).

Recently, it has been shown that Teflon* membrane filters are also suitable substrates for infrared transmission analysis of collected aerosol particles (Johnson, 1983; McClenny, 1985; Pollard, 1986). The filters commonly used in aerosol analysis have a relatively high transmittance throughout the mid-infrared region of the optical spectrum. The infrared absorbance spectrum of the aerosol particles collected on the filter is superimposed on the spectrum of the blank Teflon* filter. The blank Teflon* filter spectrum can be digitally subtracted from the sampled filter aerosol spectrum producing an infrared spectrum due only to the collected aerosol. It has been demonstrated that compound identification and quantitative analysis can be performed quickly and non-destructively. A more complete discussion of the chemical analysis of aerosol infrared spectra can be found in the separate report, FOURIER TRANSFORM INFRARED SPECTROMETRY OF AMBIENT AEROSOLS.

Infrared analysis of ambient air filters is both rapid and non-destructive. In addition the FTIR spectrometer is fully computerized making analysis amenable to automation. It would be desirable to adapt the FTIR spectrometer with an automatic sample changing apparatus in order to analyze large numbers of filters from a sampling network . This manual describes the modification of a commercial Fourier transform infrared spectrometer to include an external automatic sample changing compartment capable of accepting the sample carousel of a Sierra/Andersen Model 245* automatic dichotomous sampler. Each filter in the carousel can be positioned into the infrared beam for analysis under direct program control of the FTIR computer. An entire carousel of 40 filters can be analyzed automatically, non-destructively, with no sample preparation, and with minimal sample handling.

This manual will provide a complete description of the installation of the hardware modifications, together with the operational procedures required for automated analysis. The discussion will include a description of each component, procedures for the alignment of the optical components, and a description of the software programmed into the sample compartment microcontroller.

This manual will not include any discussion of the theory of the operation of Fourier transform infrared spectrometers or infrared spectral analysis in general. A selected bibliography on these topics is provided. All operations of the FTIR directly concerned with the sample compartment will be discussed as well as some routine maintenance and programming hints that cannot be found in the manufacturer's manuals.

SECTION 2

CONCLUSIONS

A sample compartment has been constructed and tested with a Nicolet model 5DXB* Fourier transform infrared spectrometer. The sample compartment directly accepts the sample carousel from a commercial air sampler produced by Sierra/Andersen Inc.* thereby minimizing sample handling. Software was developed and added to the existing data collection and analysis programs in the FTIR to allow complete control of the position of any filter in the sample carousel. Software was also written to analyze ambient air samples by automatically providing an optimal background subtraction and integration of absorption bands of interest of the collected particles. This instrument provides automated non-destructive analysis of up to 40 Teflon* air filters with minimal sample handling.

SECTION 3

RECOMMENDATIONS

It is recommended that this technique and instrument be included in current sampling and analysis protocols in order to develop an intercomparison database to evaluate this instrument relative to other measurement techniques. This instrument can easily be incorporated into an existing air sampling network because it uses a common filter medium, Teflon*, performs non-destructive analysis, and is designed to handle large numbers of samples in an automated system.

SECTION 4

DESCRIPTION OF THE INSTRUMENT

4.1 AN OVERALL VIEW OF THE INSTRUMENT

A view of the entire Fourier transform infrared (FTIR) spectrometer and sample compartment can be seen in Figure 4-1. The FTIR optical bench and sample compartment are on top of the laboratory table in the center of the figure. Figures 4-2 and 4-3 show the sample compartment in more detail. The top cover and front door of the sample compartment are open and the sample carousel can be seen mounted in the compartment. The sample compartment holds the necessary hardware and electronics to position each of the filters in the sample carousel into the infrared sample beam for analysis. Throughout this manual the term "sample compartment" will refer to this unit and not to the small sample compartment found on the main FTIR optical bench.The optical bench is resting on a small raised platform. A Hewlett-Packard 7470A* plotter is located on the table and underneath the optical bench. The FTIR computer consists of two cabinets underneath the laboratory table. The FTIR video display monitor and keyboard are located to the left of the optical bench and the computer. The Epson FX-85* dot matrix printer is located behind the monitor and is only partially visible in Figure 4-1.

In Figure 4-2 the sample carousel is mounted horizontally in the compartment. Some filter samples are visible in the outer ring of the carousel. A bracket, projecting from the left side of the compartment, holds the mirror that directs the infrared bean downward through the filter samples. Manual carousel position controls are located to the front and right of the compartment. Figure 4-3 shows the sample compartment without the sample carousel. The lower mirrors and infrared detector are located below the sample carousel. In the rear right corner are the various electronic components and the microcontroller that control the stepper motors. In the center of the compartment are the various mechanized components that support and horizontally and rotationally position the sample carousel. The electrical and purge air connectors are located on the lower left back panel of the compartment.

4.2 A DETAILED DESCRIPTION OF THE INSTRUMENT COMPONENTS

A detailed description of the sample compartment components is presented in this Section. The features of the FTIR optical bench that are relevant to routine operation and maintenance are also described. The user is referred to the manufacturer manuals for detailed descriptions of the FTIR components. Complete installation procedures can be found in Section 7 of this report.

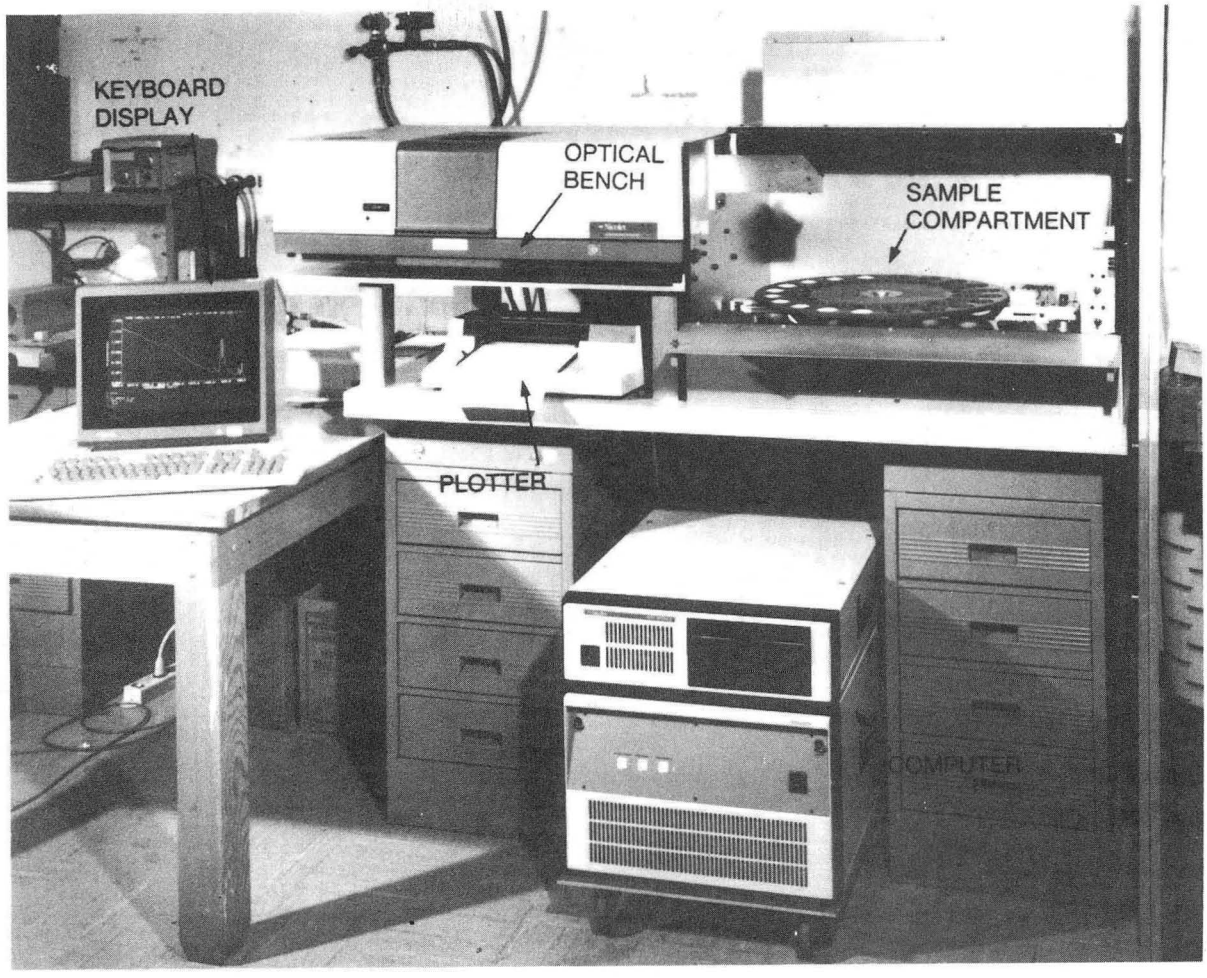

CBB 873-2243A

Figure 4-1. Fourier transform infrared spectrometer and sample changer compartment

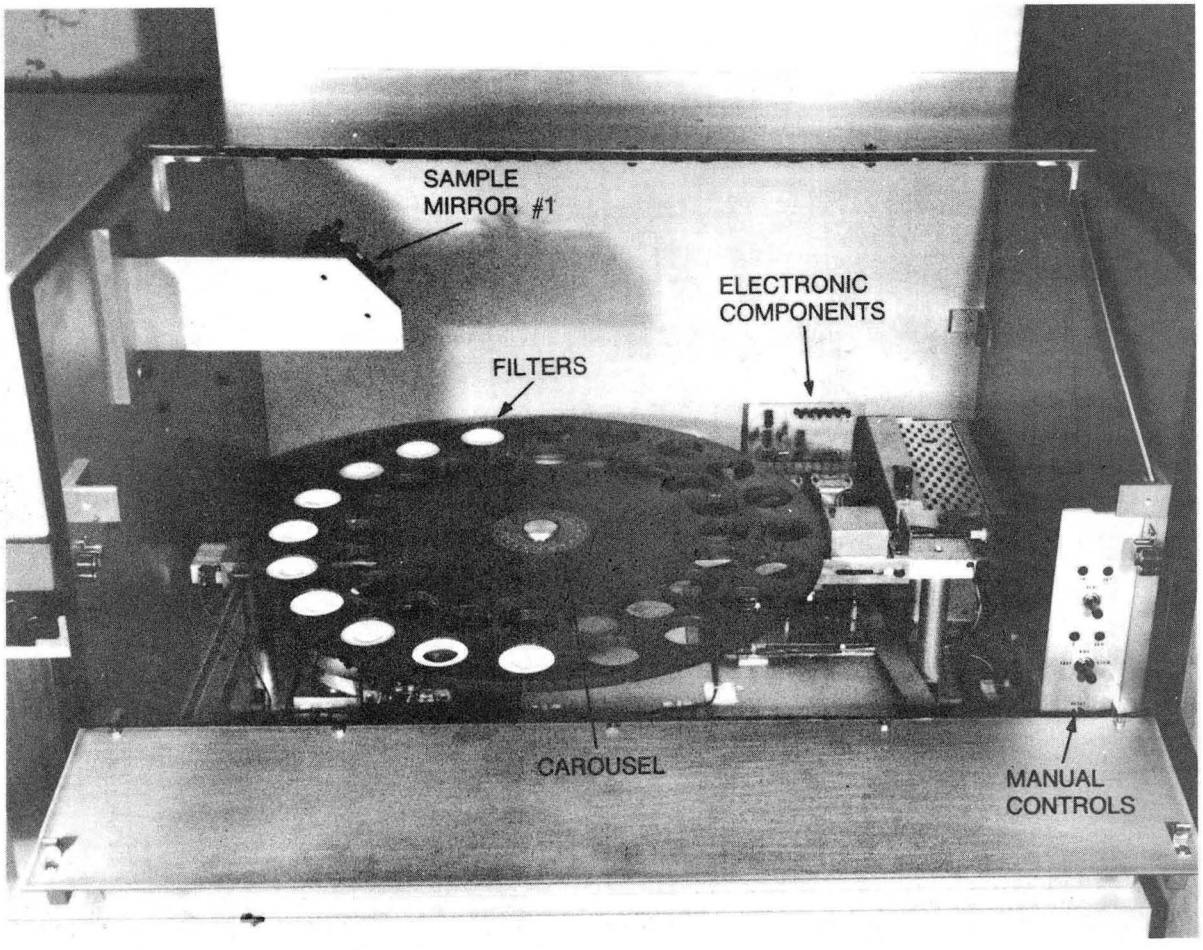

CBB 873-2245A

Figure 4-2. Sample changer compartment with sample carousel

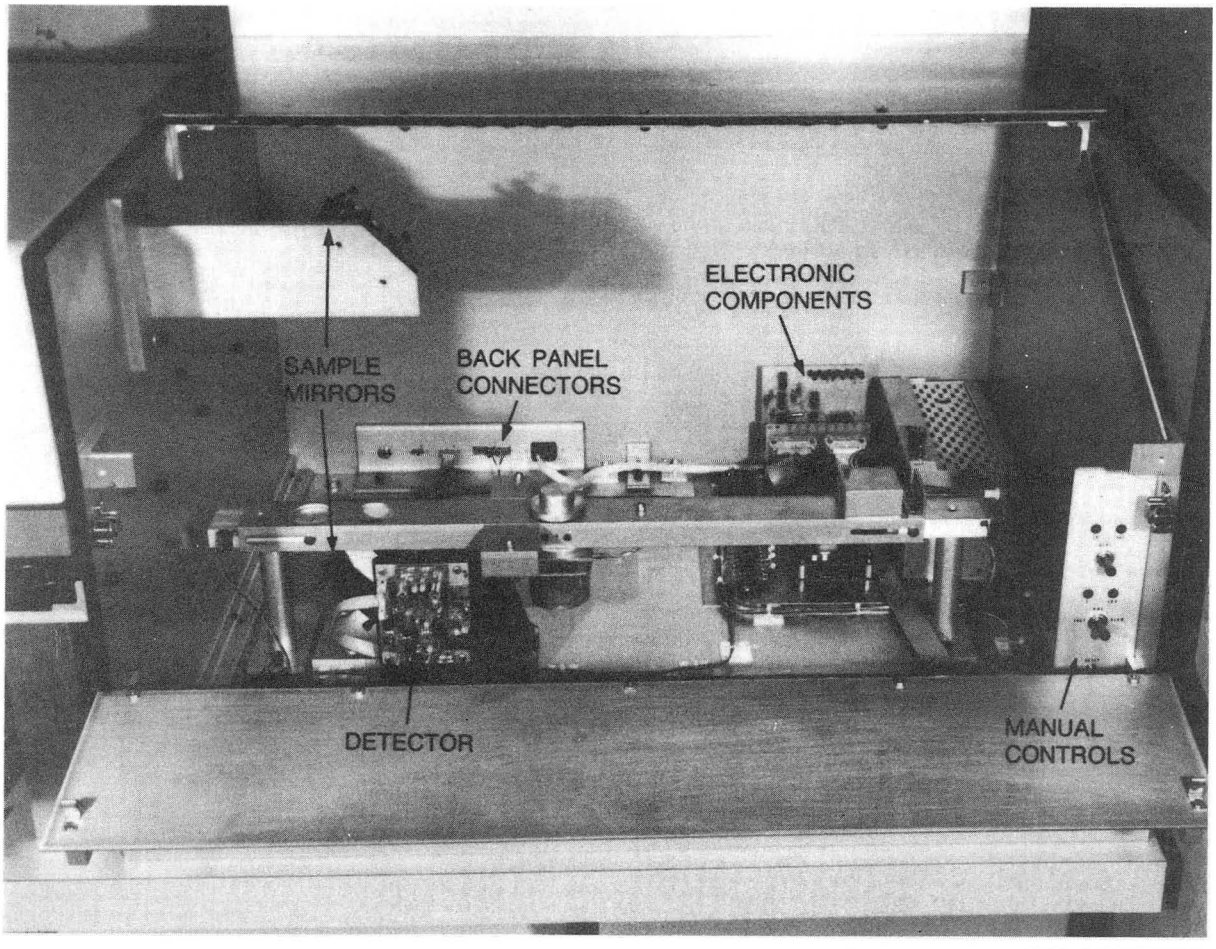

CBB 873-2247A

Figure 4-3 Sample changer compartment without sample carousel

4.2.1 Teflon* Sample Filters

The sample filters are 37 millimeter diameter 2 micron pore size PTFE Teflon* filters mounted on a polypropylene ring. The filter holders are split polypropylene rings which support a Teflon* filter sandwiched between each half of the ring assembly. They form a snap fit and are mounted loosely in the depressions of the sample carousel. When the filters are loaded in the carousel they are oriented so that the particle loaded side of the filter is facing toward the top of the compartment.

4.2.2 Sample Carousel

The sample compartment is designed to accept the sample carousel from a Sierra/Andersen* sampler such as the model 245 dichotomous air sampler. The carousel is a 50.8 cm (20 in) diameter plastic disk designed to accept 37 mm Teflon* filters mounted in plastic filter holders.

4.2.3 Sample Compartment

The sample compartment is mounted on the right side of the FTIR optical bench in conjunction with the exit port for the infrared beam (Figure 4-1). It is a box of anodized aluminum with a height of 50 cm, a width of 83 cm, and a depth of 67 cm. The horizontal dimension of the compartment is determined by the diameter of the Sierra/Andersen* sample carousel and the vertical dimension of the compartment is determined by the focal length of the mirror components which direct the infrared beam downward through the filters in the carousel and into the detector located underneath the carousel. The top cover opens for access to the compartment. It can be propped into a partially open position using a support arm located on the inside right panel of the compartment. A smaller door on the front can be used to insert the sample carousel into the compartment with minimum loss of purge air while the top cover is closed.

4.2.4 Sample Compartment Components

Figure 4-4 is a schematic showing the location of all components in the sample compartment except the first sample mirror (mirror 1).

4.2.4.1 Mirrors

A collimated infrared beam from the FTIR optical bench enters through a port in the left panel of the compartment. Three mirrors, mounted in the sample compartment, focus the infrared beam through the filters in the sample carousel and into the detector. The sample and detector mirrors in this compartment are identical to the mirrors located in the main optical bench. The focusing action of the mirrors in the FTIR optical bench is shown in Figure 4-5.

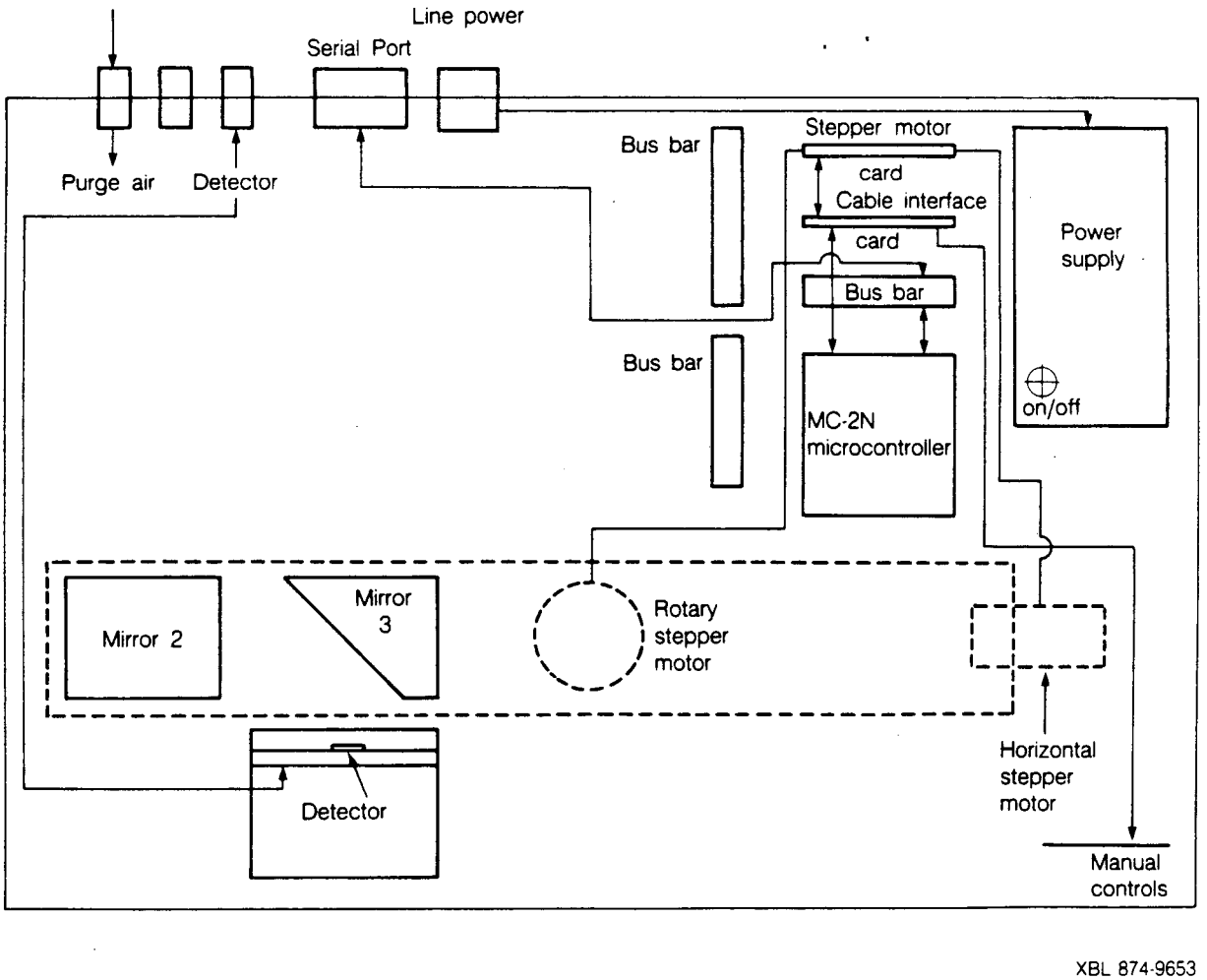

Figure 4-4 Schematic of sample changer compartment.

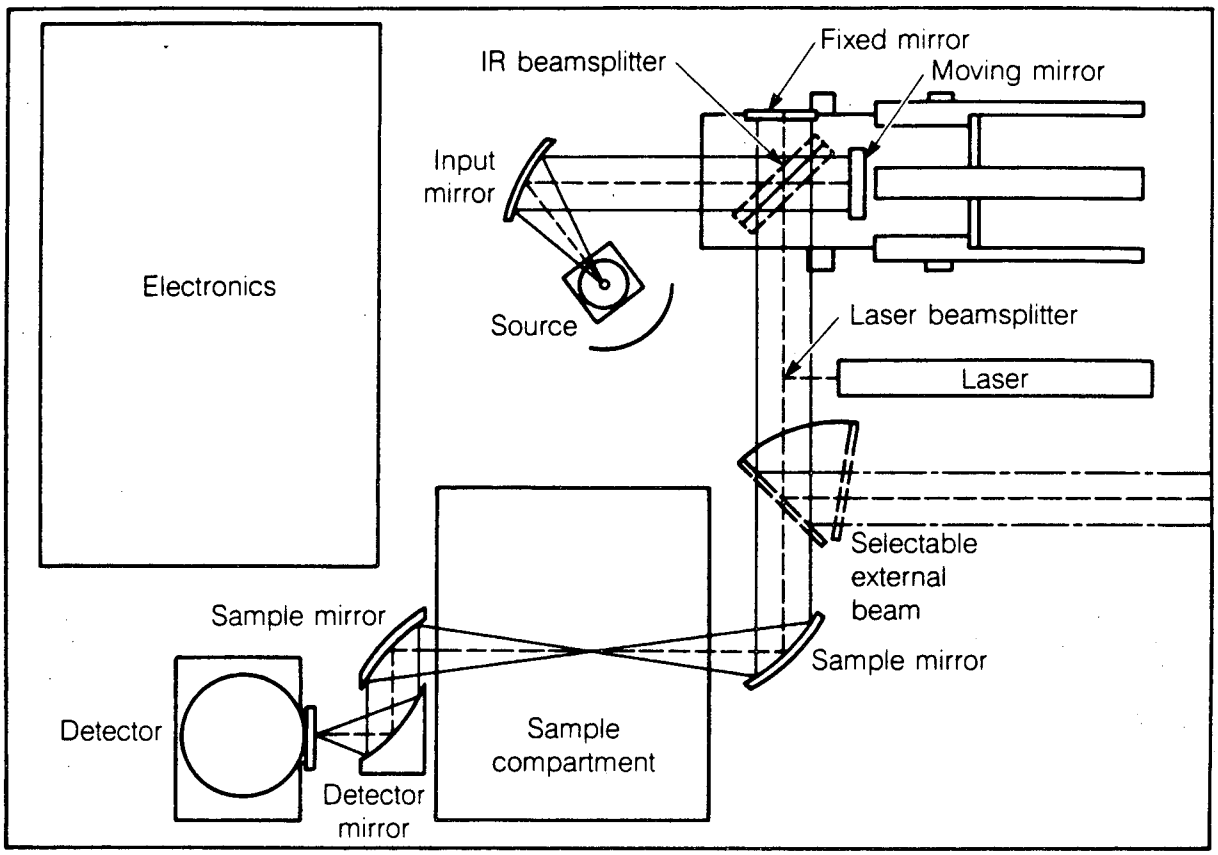

XBL 882-6002

Figure 4-5 Schematic of FTIR optical bench.

The first sample mirror (mirror 1) is located on a bracket high on the left side of the sample changing compartment. This reflects the beam vertically down through the filters to the second sample mirror (mirror 2). The focal point of these two mirrors is slightly above the filters. The spot size of the infrared beam on the filters is approximately 15 mm in diameter. This is large enough to average any non-uniformity in the particle deposition on the filter. The second sample mirror reflects the infrared beam into the detector mirror which focuses the beam into the detector. The tilt of the sample mirrors can be adjusted with the three alignment screws on the back side of the mirrors. The mirror positions can also be adjusted by moving the mirrors after the base screws have been loosened.

4.2.4.2 Infrared Detector

The deuterated triglycine sulfate (DTGS) detector with a KBr window is mounted on the base of the compartment underneath the sample carousel. This detector was originally mounted in the FTIR optical bench. A mercury cadmium telluride (MCT) detector can also be mounted in this location. A MCT detector is more sensitive than a DTGS detector; however, it has a smaller linear dynamic range.

4.2.4.3 Manual Controls

The manual controls to control the motion of the sample carousel are located on the panel in the right front region of the compartment (Figures 4-2, 4-3, and 4-4). Two toggle switches control the rotational and horizontal motion of the carousel. Rotational motion is available at both fast or slow speeds in a clockwise direction. This front panel also has a reset button to reset the program in the sample compartment microcontroller.

4.2.4.4 The Carousel Mounting and Positioning Assembly

The carousel is mounted in the sample compartment on the central axle of a stepper motor which provides clockwise rotary motion to the carousel (see Figures 4-2, 4-3, and 4-4). There is a small hole near the center of the sample carousel at the position of filter number 1. The carousel is mounted by orienting this hole to match the location of a small off-axis guide pin on the rotary stepper motor. This rotational stepper motor is mounted on an aluminum bar whose horizontal motion is controlled by a second stepper motor. The horizontal motion is sufficient to position either the inner or outer concentric ring of filters into the infrared beam.

Pulses to the stepper motors are provided by the microcontroller and the stepper motor drive card. The closure of the limit switches are detected by the microcontroller. The final positions of the horizontal motion are sensed by the limit switches at either end of the bar. The stepper motor drive card will detect the closure of the horizontal position limit switches and stop horizontal motion independent of the microcontroller. The microcontroller also stops sending pulses when it detects the closure of the horizontal limit switches. Another limit switch underneath the bar and near the rotational stepper motor locates the position of the first filter. A final limit switch on the right end of the bar locates the position of each filter by sensing the presence of the indents at each filter location on the perimeter of the carousel. Proper positioning of this limit switch is critical for successful operation.

4.2.4.5 Back Panel Hardware

Cable connectors for line power, the RS232 communications line to the Nicolet* computer port G, and the detector power and signal line are located in the lower left rear corner of the sample compartment (Figure 4-4). The purge air supply inlet port can also be found in this corner.

4.2.4.6 Electronic Components

At the bottom right rear corner of the sample compartment are the electronic components to operate the stepper motors. These consist of a stepper motor drive card, a cable interface card, a power supply, and a control computer. The location of each of these components is shown in Figure 4-4.

Stepper Motor Drive Card

The stepper motor card drives both the horizontal and rotational stepper motors which position the sample carousel. The stepper motor drive card receives instructions from the BASICON microcontroller through the cable interface card. The electronic schematic for the stepper motor card can be found in Section 12.

Cable Interface Card

The cable interface card provides the interface between the control computer input/output lines and the input/output lines to the stepper motor drive card. This card also contains the logic circuits that interface the manual controls to the stepper motor drive card. The electronic schematic for the cable interface card can be found in Section 12.

Power Supply

The power supply delivers 12 VDC at 6.8 amps regulated power. The power supply has an independent on/off switch and power indicator. A 5 volt regulator is located underneath the panel with the on/off switch and power indicator.

4.2.5 BASICON Microcontroller

The sample compartment stepper motors are controlled by a BASICON MC-2N* microcontroller. A control program is written in the EPROM located on the microcontroller board. Upon power up or reset, the microcontroller is programmed to respond to the serial input of an ASCII 1, 2, 3, or 4 sent from the FTIR computer through the RS232 communications cable. This input initiates a branch instruction to an appropriate machine code subroutine to execute the control instructions to position a filter into the infrared beam for analysis. A detailed description of the operation and programming of the microcontroller can be found in Section 6.

4.2.6 The Fourier Transform Infrared Spectrometer

4.2.6.1 FTIR Specifications

Spectral wavelength range: 400 - 4800 cm^{-1}

Spectral resolution: Better than 2 cm^{-1} peak-width at half-height

Scan speed: One scan per second standard

Signal-to-noise ratio: The peak-to-peak noise variations on the 4 cm^{-1} resolution, one-minute measurement 100% line are defined as follows:
±0.4% at 4400 cm^{-1}; ±0.10 % at 1300 cm^{-1}; ±0.40 % at 500 cm^{-1}

Wavelength accuracy: 0.01 cm^{-1} throughout the spectral range, controlled by HeNe laser traversing the center of the infrared beam

Beam splitter: Multi-layer germanium-coated KBr

Image size: 8 mm at center focus

Beam Size: 32.0 mm

Detectors: Deuterated triglycine sulfate; mercury cadmium telluride optional

Processor: Based on the Nicolet 1280* large-scale minicomputer furnished with 512 Kilobyte words of solid state memory

Color display: High resolution 13-inch color raster-scan display with full alphanumeric and interactive graphics capabilities

Data storage: Double-density, dual-sided, 1-Megabyte floppy disk; 36-Megabyte Winchester-technology Storage Module Device

Physical dimensions 5DXB optics bench: 86 cm W X 56 cm D X 28 cm H

Options: Computer controlled flipper mirror

4.2.6.2 Optical Bench

The optical bench is a major component of the Fourier transform infrared spectrometer system. It contains all of the optical components of the instrument including the light source, interferometer, laser, and detector, as well as all of the associated mirrors and electronics. In the present system, the DTGS detector has been moved to the sample compartment.

The optical bench lies on a platform that is 23 cm in height. This platform is attached to the sample compartment. The sample compartment is also attached directly to the base of

the optical bench to ensure constant alignment of the infrared beam between the FTIR and the sample compartment. Foam rubber insulation prevents loss of purge air in the air space between the optical bench and the sample compartment.

The entire cover to the optical bench can be removed for access to the components inside. The cover is secured to the base of the optical bench by screws along the perimeter of the base. To remove the cover loosen the screws completely and lift the entire cover slowly and vertically off of the base. The location of the various components in the optical bench are shown schematically in Figure 4-5. Note the location of the light source, the interferometer, the laser, and the flipper mirror. Each of these components will require adjustment and/or replacement during assembly or routine maintenance.

4.2.6.3 Printer

The printer is an Epson FX-85* dot matrix near letter quality printer. Refer to the Epson FX-85* instruction manual for detailed information concerning the printer.

4.2.6.4 Plotter

The plotter is a Hewlett-Packard 7470A* 2-pen plotter.

SECTION 5

NICOLET* COMPUTER PROGRAMMING ENVIRONMENT

5.1 HARD DISK DIRECTORY STRUCTURE

There is an extensive directory and subdirectory structure present on the 36-Megabyte hard disk. The majority of the subdirectories are created upon the installation of the operating system and the other programs supplied by Nicolet*. All of the custom programs described in this manual are stored in the subdirectory PROGRAMS. All spectral file directories are found in the subdirectory of PROGRAMS called SCANFILES. The spectral files for each experiment are found in subdirectories of SCANFILES. The path from the ROOT directory is:

ROOT -> USER -> PROGRAMS -> SCANFILES -> subdirectories of experiments.

The STARTUP file in the ROOT directory has been edited so that the computer begins in the subdirectory PROGRAMS and executes the custom DX program DXAEROSOL1.

5.2 SOFTWARE DEVELOPMENT

This Section is intended to provide an introduction to the organization of the software environment for the Nicolet 5DXB* Fourier transform infrared spectrometer. It is not intended to be a substitute for the Nicolet* software manuals provided with the instrument. These manuals provide detailed information concerning programming techniques and execution of the commands available in each program. This Section will provide an overall view of the functions and interrelationships of the various programs with which the user should become familiar.

There are three major levels of programming in the Nicolet 5DXB* FTIR that are of direct importance to the user. Each level has its own set of commands and programs that are available for use. Figure 5-1 illustrates the relationship between the three program levels, NICOS, DX Command mode, and FORTH and the programs that can be run from them to write other programs, new commands, and text files. The commands shown in parentheses are used to move between the programs labeled in the boxes or to access disk files. For example, to move into the DX command mode from the NICOS operating system simply type DXFTIR at the prompt NICOS>. The new prompt dx> will indicate that the user is now in the command mode. Some of these commands require arguments. To load a sample spectrum from the hard disk for display in the command mode execute the command GDS "file name" at the dx> prompt. After the file has been loaded, the program remains in the command mode. Figure 5-1 shows only a small subset of the commands described in more detail in the program manuals.

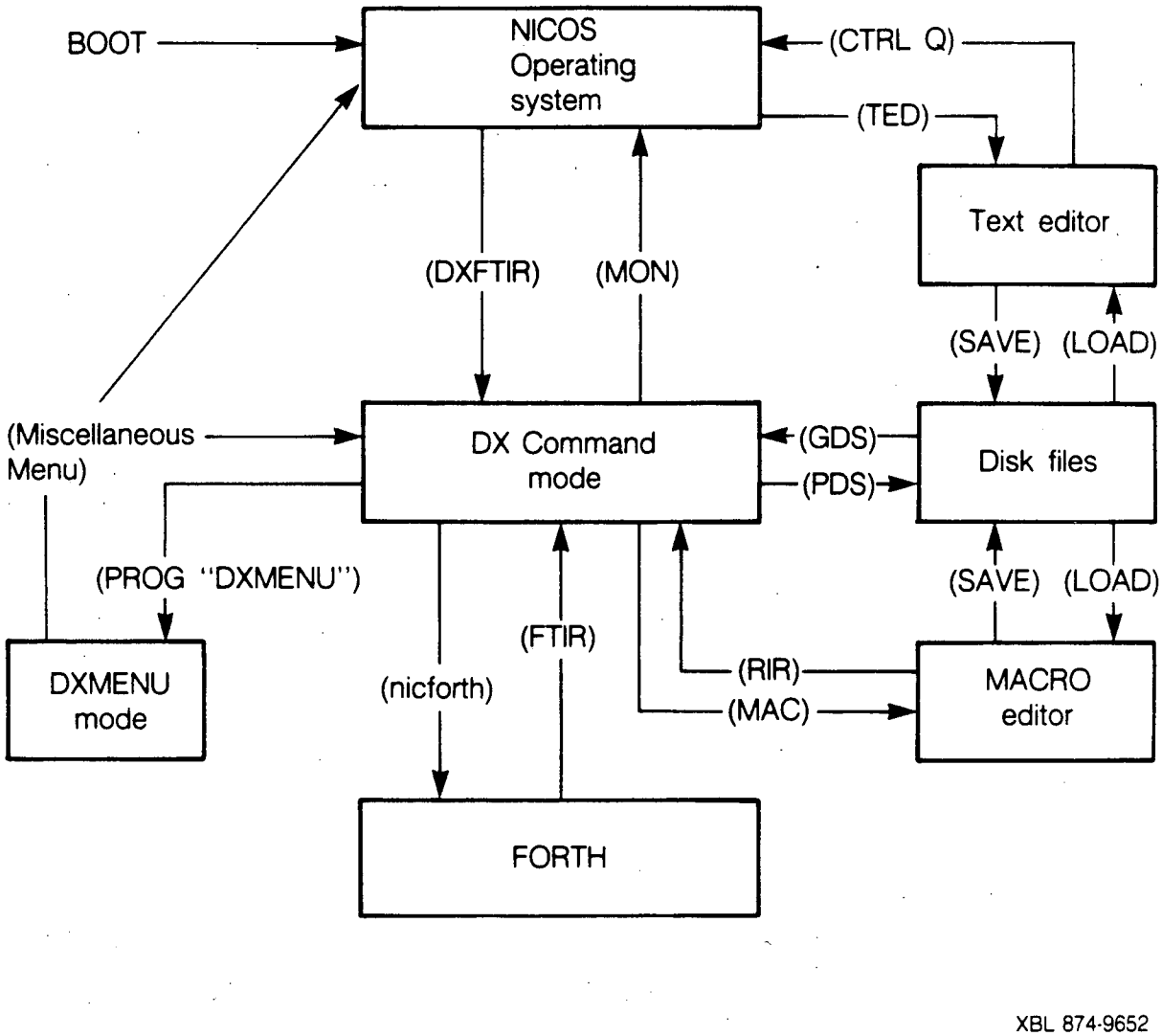

Figure 5-1 Nicolet* computer software environment

5.2.1 The NICOS Operating System

NICOS is the computer operating system. Within NICOS the user can create directories and subdirectories, copy and delete files, print files, run the TED text editor, and move into the FTIR level of programming. The prompt in this mode is NICOS> . The NICOS SHELL manual (P/N 269-757000) describes the operating system commands.

5.2.2 The TED Text Editor

The TED text editor is used to create and edit text files. Typical text files are macros to be run in the DX command mode and FORTH programs to be compiled in FORTH. TED is run from the NICOS operating system by typing TED at the NICOS> prompt. TED commands are described in the TED NICOS Raster Editor manual (P/N 269-750101).

5.2.3 The DX Command Mode

The DX command mode is the primary program from which the user can execute commands to directly control data collection and analysis from the FTIR optical bench, computer, and sample chamber. The user can set the spectral resolution, initiate data collection, read and write data files, display and plot spectra, sent data to the printer, initialize the sample carousel position, etc. The prompt in this mode is dx>. The DX command mode can be customized with user defined commands and variables. The current custom version is DXAEROSOL1. DXFTIR commands are described in Section 4.0 SOFTWARE, 4.1 DX instructions, of the Nicolet 5DXB* operating manual (P/N 269-757400).

5.2.4 The DXMENU Mode

DXMENU is a menu driven program to collect and analyze data. DXMENU is simple to learn and use but is not as versatile as the DX command mode. In addition, the commands to control the position of the sample carousel are not available in DXMENU. DXMENU is entered by typing PROG "DXMENU" at the dx> prompt. DXMENU can be exited to either NICOS or DXFTIR from the Miscellaneous Functions (function key 9) option from the main menu. DXMENU is largely self explanatory but it is also described in the DXMENU GUIDE (P/N 269-754202).

5.2.5 The MACRO Editor

MAC is the macro programming language. It is similar to BASIC but much more limited in programming capabilities. It does support programming loops and decision making. Strings of DX commands, including the commands to control the sample compartment, can be combined into programs that can be run by executing a single macro name. The macros can be permanently added to the DX command library using the DXSTORE command. This allows the user to customize the DX command language to include any desired macros or variable

default values. MAC is run by typing MAC at the dx> prompt. Return to the DX command mode by typing RIR. The macro programming language commands are described in Section 4.0 SOFTWARE, 4.1 DX instructions, of the Nicolet 5DXB* operating manual.

5.2.6 FORTH Programming

FORTH language programming is done in the FORTH programming level. This instrument uses Nicolet's* version of the FORTH programming language. Many of the commands in the DX command mode are FORTH language programs. In order to fully exploit the versatility of the DX command structure, the user should become familiar with FORTH programming at this level.

Some of the limitations of the macro language can by overcome with programs written in FORTH. For instance the DX command SQROOT (Sections 5.2.7.3 and 11.1.4.5) was written in FORTH to calculate the square root of a number. This capability did not originally exist in the macro language. Unlike standard FORTH, the Nicolet* version supports floating point numbers and calculations.

FORTH is entered by typing nicforth at the dx> prompt. The new prompt "ok" will indicate that the computer is in the FORTH program. Return to the DX command mode by typing FTIR. Any programs written while in FORTH are available for use in the DX command mode. They can be saved permanently by using the DXSTORE command (see Section 5.2.9.5). To eliminate the programs written in FORTH type MON to return to the NICOS operating system and then return to the DX command mode. FORTH programming is described in the NIC-forth79 programming manual (P/N 269-706002), the DXFTIR programming manual, and the book "Starting Forth" by Leo Brodie.

Most useful FORTH programs will require the transfer of the values of a variable between the FORTH programs and the DX Command mode. Below is an example program demonstrating how a variable can be passed between a FORTH program and the DX Command mode.

```
DECIMAL

VARIABLE num

COMM DEFINITIONS

: TEST

nss @ num !      (store the number of scans, nss, in num)

;

IVAR DEFINITIONS

&&IPARAM NUM ] num [
```

DECIMAL sets the program environment so that numbers will be displayed in decimal notation. There is also an OCTAL mode not used in this example. Define the FORTH variable in lower case letters in the VARIABLE declaration. The variable num is used in lower case letters in the program. Programs after the statement COMM DEFINITIONS will be included as commands in the DX command library. The name of this program is TEST. TEST stores the value of the DX variable nss in num. In the DX command mode, the variable num will be in upper case letters. The equivalence between the DX variable NUM and the FORTH variable num is established after the statements IVAR DEFINITIONS and &&IPARAM NUM] num [. For real number variables, use the statements FVAR DEFINITIONS and &&FPARAM NUM] num [.

Exit FORTH programming by typing FTIR. The program should execute in the DX command mode by typing the name of the program. This program will operate on the variable NUM. The new variables and command names will be listed with the other DX commands using the HELP command.

The above program could have been written in a text file using the TED text editor. This text file can then be loaded as a FORTH program. First move into dx> mode. Type NICFORTH to get an "ok" prompt. Load the text file with the FORTH program by typing PLOAD "filename". Type FTIR to get back to dx> mode. If you have more than one file to load, then type FTIR and then go back to FORTH by typing NICFORTH between each file. The new command and variables will not become a permanent addition to the DX command mode until a new DX program is created with the STOREDX command.

5.2.7 Customized DX Command Program - DXAEROSOL1

DXAEROSOL1 is a customized version of DXFTIR, the DX command program supplied by Nicolet*. A number of new commands are available in DXAEROSOL1 and new variable default values have been set that have proven to be the most appropriate for infrared analysis of ambient aerosol analysis. The following is a brief description of the new commands found in DXAEROSOL1. Complete program listings can be found in Section 11.2.8

5.2.7.1 Variable Default Values in DXAEROSOL1

FXF=1800.0	LXF=500.00	CXF=-400.00
FYA=0.0000	LYA=1.0000	CYA=0.4000
NSB=100	NSS=100	NSR=100
SECONDS=5	DET=2	GAN=1
DFCR=0.0001	PF1=0	FCR=1.0000
NDP=10240	NTP=16384	NPBP=2048

5.2.7.2 Sample Compartment Control Commands

In order to communicate with the sample compartment microcontroller, new commands were developed and added to the DX command language. Nicolet* provided assembly lan-

guage routines that read and write ASCII characters to and from the Channel G RS232 serial port on the Nicolet* computer. These assembly language routines were incorporated into new DX commands called OUT1, OUT2, OUT3, OUT4, OUTALL, and PUTIN. The program listings can be found in [Sections 11.1.2 and 11.1.3]. These commands are described below:

OUT1 - This command will load the character "1" into the output buffer for serial port G.

OUT2 - This command will load the character "2" into the output buffer for serial port G.

OUT3 - This command will load the character "3" into the output buffer for serial port G.

OUT4 - This command will load the character "4" into the output buffer for serial port G.

OUTALL - This command will output the character from the output buffer of serial port G.

OUT1, OUT2, OUT3, OUT4, and OUTALL can be found in the file named CHGOUT.4TH in the PROGRAMS subdirectory.

PUTIN - This command will read a character into the serial port G. In particular it will only read in the character "1". This is the code sent from the microcontroller to indicate that it has finished its task.

PUTIN can be found in the file named CHGIN.4TH in the PROGRAMS subdirectory.

The following command sequence will position the sample carousel to the first position - OUT1 OUTALL PUTIN

The following command sequence will position the sample carousel to the next filter position - OUT2 OUTALL PUTIN

The following command sequence will position the outer ring of filters into the sample infrared beam - OUT3 OUTALL PUTIN

The following command sequence will position the inner ring of filters into the sample infrared beam - OUT4 OUTALL PUTIN

5.2.7.3 Additional Custom DX Commands

A number of macro programs have been written to provide useful routines for further program development. Macros can be used within other macros. The program listings can be found in Section 11. The following is a list of macros that have been developed for use:

INITARRAY - This command will initialize 1000 cells of an array ARRAY1 with zeros.

ARRAY1 will hold data for 1000 integers or 500 real data values. Real numbers such as the variable YCUR (the Y cursor position or absorbance value) require two cells for storage. The number of values in ARRAY1 is stored in the variable N. INITARRAY sets N=0.

LOADARRAY - This command will load the value of YCUR into the array ARRAY1 and increase the value of the variable N by 2. Real numbers such as the variable YCUR require two cells for storage. N is the number of values loaded into ARRAY1 since it was initialized by INITARRAY.

ADDARRAY - This command will average the numbers in ARRAY1 and put the result in the variable AVE.

STDSUM - This command will calculate the variance of the numbers in the array ARRAY1 using the value of the average in the variable AVE. The result is placed in the variable SUM1. ADDARRAY should be executed before STDSUM.

SQROOT - This command will take the square root of the number in the variable SUM1 and put it in the variable SQR.

INTEGRATE - This command will integrate the absorbance values in the array ARRAY1 using the trapezoidal rule. The result is put into the variable INTRES.

CLOCK - This command will cause the spectrometer to pause for the number of seconds put into the variable SECONDS.

HELPMEAS - This is a help message describing how to collect and analyze ambient filter spectra.

SCANFILTERS - This is a program to collect and store the spectra of filters mounted in the sample changer compartment.

ANALYZE - This is a set of programs to collect and anlyze the spectra of aerosols collected on Teflon* filters.

5.2.7.4 Construction of DXAEROSOL1

To create the program DXAEROSOL1, a collection of FORTH and macro programs must be added to the standard Nicolet* program DXFTIR. All of the program files can be found in the subdirectory PROGRAMS. Begin in the NICOS operating system in the subdirectory PROGRAMS. Type the following commands exactly as shown. Follow the commands in each line with a carriage return.

```
NICOS>    DXFTIR  (set all the variables as shown in Section 5.2.7.1)
dx>       CONTROL T
dx>       NICFORTH
ok        PLOAD CHGIN.4TH
ok        PLOAD CHGOUT.4TH
```

```
ok          FTIR
dx>         NICFORTH
ok          PLOAD TIMECLOCK
ok          FTIR
dx>         NICFORTH
ok          PLOAD PROGRS
ok          FTIR
dx>         NICFORTH
ok          PLOAD INT
ok          FTIR
dx>         READ HELPMEAS
dx>         CONTROL T
dx>         STOREDX
dx>         <filename>      (DO NOT USE THE NAME - DXFTIR!)
dx>         MON
NICOS>          (type the filename to enter the program)
```

5.2.8 Useful DX Commands

The following is a list of particularly useful commands and variables available in the DX command mode. The first time user should concentrate on learning the commands in this list to become proficient with the FTIR data collection and analysis. Refer to the Nicolet* operations manual, Section 4.0 Software, 4.1 DX instructions.

5.2.8.1 Data Collect Instructions

ALIGN, NDP, NTP, NSB, NSR, NSS, SCB, SCR, SCS,

5.2.8.2 Display and Plot Instructions

FXF, LXF, CXF, FYA, LYA, CYA, DSB, DSR, DSS, PF1, PLOTON, TIB, TIR, TIS, XCUR, YCUR

5.2.8.3 Data Manipulation

ABR, ABS, DFCR, FCR, FCS, RAR, RAS, SMR, SMS, SUB

5.2.8.4 Disk Input/Output and Spectral Files

D0, D1, GDB, GDR, GDS, PDB, PDR, PDS

5.2.9 Miscellaneous Programming Information

The following program information describes commands that are often used but cannot be found in the manufacturer program manual or is poorly described in the manuals. This type of information is generally available through the Nicolet* Technical Information Center (800-356-8088). Also help is available on the computer from any directory by typing HELP.

5.2.9.1 Print Text Files

To print a text file type: PRINT "filename"/-LP

5.2.9.2 Plot Spectra

To plot a spectral file on 8 1/2 X 11 inch paper, set CXF and CYA with the following formulas: CXF=-(FXF-LXF)/10.5; CYA=(LYA-FYA)/8. Set PF1=0 to obtain a linear x-axis scale.

5.2.9.3 Output Device

To direct output to only the screen, set OUTDEV=4 (default). To direct output to both the printer and the screen, set the variable OUTDEV=132.

5.2.9.4 Spectral Subtraction

In the DX Command mode, spectral subtractions are performed interactively with the SUB command. However, if you want to perform spectral subtractions noninteractively in a MACRO program, use the DIF command that is not listed in the DX programming manual. The DIF command will not ask the user to adjust the value of the variable FCR.

5.2.9.5 DXSTORE

New commands and variables will not become a permanent addition to the DX command mode until a new DX program is created with the STOREDX command. Type STOREDX "filename". DO NOT USE THE NAME - DXFTIR ! Type MON to move into the operating system NICOS. Now type the new DX filename that was used with the STOREDX command. The new customized DX Command mode will appear with the dx> prompt. STOREDX can also be used to permanently change the value of parameters such as DET, NTP, NSS, etc. as well as parameters created by the user such as the variable SECONDS. DXAEROSOL1 is a custom DX program.

5.2.9.6 Directory Space

New directories are created with the MAKE command in the NICOS operating system. New subdirectories hold a maximum of 64 files. The number of files that a subdirectory can hold can be changed with the program XDIR. Move a copy of XDIR into the empty subdirectory and type: XDIR. Choose the expand option to increase the maximum number of files.

5.2.9.7 Format a Floppy Disk

To format a floppy disk, go to the root directory by typing CD. Now type SYSGEN.2D. Select drive 1, then I to initialize the disk, and Y to erase all data on the disk. DO NOT SELECT DRIVE O ! DRIVE O IS THE HARD DISK.

SECTION 6

THE BASICON MICROCONTROLLER

6.1 Overall Description of the BASICON Microcontroller

The BASICON MC-2N* microcontroller communicates with the FTIR computer and executes instructions to control the motion of the filter sample carousel. The on-board microprocessor is a National Semiconductor (NSC) 8073*. The control program is written in NSC TINY BASIC which is resident in ROM in the NSC 8073* chip. TINY BASIC is a shorter version of standard BASIC with a few special instructions which allow linkage to machine code subroutines and communication to the ports of the Intel 8255* programmable peripheral interface. The MC-2N comes with 2-Kilobytes of random access memory for program development. The program can subsequently be written to a 2732 EPROM* chip with 4-Kilobytes of storage memory. The PM-1 EPROM programming board is a separate board which plugs into the 8255* port for this purpose. In order to run the program written to the EPROM, the EPROM chip must replace the Utilities chip on the main controller board. For further information refer to the BASICON MC-1N Manual and the National Semiconductor Users Manual for the 70 Series Microprocessor.

The microcontroller communicates with the FTIR through the RS232 cable which plugs into the 10 pin connector J1 on the controller board. It communicates with the stepper motor drive card through the 26 pin connector J2 on the controller board. The pin assignments for these connectors can be found in the MC-1N manual.

The Intel 8255* Peripheral Interface port on the MC-2N* microcontroller board provides three eight bit ports that can be programmed for input or output. Port A, programmed for output, sends pulses to the stepper motors, and port B, programmed for input, is used to sense the status of the limit switches. Each port has an address in memory. The status of an input port can be read and the status of an output port can be changed by accessing the appropriate memory address. Ports can be accessed for input or output directly from TINY BASIC or through machine code instruction subroutines. The port bit assignments for the control of the position of the sample carousel are shown in the table on the following page.

PORT A - programmed for output

bit	J2 pin connector	function
A0	4	rotation pulses
A1	3	move left pulses
A2	2	move right pulses

PORT B - programmed for input

bit	J2 pin connector	function
B0	21	sense filter located
B1	23	sense position first filter
B2	25	sense left limit
B3	26	sense right limit

For further information concerning programming the 8255* Programmable Interface Port, refer to the Intel Microprocessor and Peripheral Handbook and the BASICON MC-1N Instruction Manual.

6.2 The EPROM Microcontroller Program Description

The source code listing for the program can be found in Section 11.2. The main program is written in TINY BASIC. Some of the motion control subroutines have been written in machine code. The following is a brief description of the program. There are also extensive comments in the source code listing.

The main program is a BASIC DO-UNTIL loop. The first instruction of the loop is an INPUT statement. The program flow stops here until the FTIR sends an ASCII 1, 2, 3, or 4 followed by a carriage return <CR>. When an input is received, one of four subroutines is executed. When the subroutine is completed, the program exits the loop and prints an ASCII 1 to the FTIR. The program then returns to the INPUT statement in the DO-UNTIL loop to wait for the next command. There should be a 2-3 seconds interval between repeated inputs to the microcontroller to allow the relatively slow BASIC program to return to the INPUT statement.

The four subroutines that can be requested by the FTIR are:

1. An input of ASCII 1 causes the controller to position the first filter into the infrared beam for analysis. A machine code program quickly rotates the carousel to locate the position of filter 1; however, the program cannot accurately stop the carousel at this position at this speed. Once the approximate location of filter 1 is known, a fixed

number of pulses rotates the carousel almost to position 1 at which point a BASIC routine slowly but accurately stops the carousel in the correct position. This subroutine microcontroller will position the first filter in the beam within 13-22 seconds, depending on the starting position of the sample carousel.

2. An input of ASCII 2 will move the sample carousel clockwise to the next filter position. This is done slowly with a BASIC routine. Since the limit switch status is the same for each filter location, this routine first senses the closure of the microswitch as the carousel leaves the current position. It then senses the opening of the microswitch when it has arrived at the next filter location. The microcontroller will move from one filter to the next filter in 7 seconds.

   If more than 130 pulses are output to move from one filter to the next, then the computer assumes that the filter cannot be located and it will make a single attempt to locate the filter position again. It will do this by returning to the position of filter 1 and then moving to the correct filter position. This routine is designed to respond to mechanical failures of the limit switch; however, this type of error has not been observed with this system.

3. An input of ASCII 3 or 4 will position the outer or inner ring of filters respectively into the infrared beam using a machine code subroutine. It requires 10 seconds to move horizontally from one limit switch to another.

6.3 Programming the BASICON MC-2N

This Section will describe how to set up the MC-2N microcontroller to program in random access memory and write the program to an EPROM in the PM-1 EPROM Programmer board. Refer to the MC-1N manual for instructions to program in TINY BASIC.

1. Remove the sample carousel from the sample compartment and turn off the power on the power supply.

2. Note the location of pin number 1 (pin number 1 is at the end of the socket away from the edge of the controller board). Carefully remove the EPROM chip from the main microcontroller board. DO NOT BEND THE PINS!. Carefully insert the Utilities EPROM into the same socket that held the EPROM chip that was just removed.

3. Unplug the ribbon cable from the 26 pin J2 connector. This is the ribbon cable that connects the microcontroller to the cable interface board.

4. Plug the PM-1 EPROM programming board into the J2 connector. One corner of this board will have to slide under the J1 connector. Insert an erased 2732 EPROM with the number 1 pin away from the edge of the board. Lower the socket lever to make pin contact. The EPROM can be erased by exposure to ultraviolet light (such as from a mercury lamp) for 20 minutes.

5. Unplug the ribbon cable from the Channel G plug in the back of the Nicolet* computer cabinet. Plug this into the input of a display terminal. Set the baud rate of the terminal to 1200 baud.

6. Turn on the terminal. Turn on the power supply in the sample compartment. Upon power up of the MC-2N, there will be a sign-on message on the terminal.

7. Type: ^C (CONTROL-C)
   NEW #1100
   NEW

8. The MC-2N is now ready for BASIC Programming. The location #1100 is the beginning of the user programming space which extends to #18FF (2K). Typing NEW alone will erase the current program in memory.

9. To return to the Utilities program type: NEW #8000. The sign-on message will return. Refer to the Utilities manual for a description of the utilities commands. Type H for help.

10. Two useful utilities commands are Display (D) and Alter (A). Type D 1100 1200 to display all of the memory locations between these two hexadecimal addresses. The ASCII characters for each memory location are displayed in the right-hand column. The most recent BASIC program starts at #1100. Type A 1200 to insert a hexadecimal number at this memory location. Type . to return to the utilities mode. Alter is the means of inserting machine code subroutines at specific memory locations.

11. Any program may be copied to the EPROM with the Program (P) command. Note that the address range for the EPROM when it is plugged into the main board is #8000 - #9FFF. Any machine code programs with branch instructions should be written in pointer relative format so that the difference in absolute addresses does not affect the operation of programs that test successfully in RAM. All programs written to the EPROM must begin with a CLEAR statement at line number 0.

12. After the EPROM has been programmed, turn off the power, unplug the PM-1, and insert the EPROM in the socket that contains the Utilities EPROM. The EPROM program will run at power up or reset.

6.4 MC-2N Programming Hints

1. The MC-2N is extremely unforgiving with respect to syntax errors. The syntax of all statements must be absolutely correct when typed!

2. All BASIC programs in EPROM must begin with line 0 Clear.

3. EPROM memory locations begin at #8000 (hexadecimal location 8000). Machine code programs written in RAM should use relative branch instructions so that they will operate properly when relocated to the EPROM memory locations.

4. All machine code subroutines must end with a RETURN statement (5C).

SECTION 7

INSTALLATION PROCEDURES

7.1 ASSEMBLY

The Nicolet* installation manual is included with the documentation for the 5DXB* FTIR. Follow the directions carefully. All parts referred to in the installation procedures are labeled in the instrument.

7.1.1 Main Compartment Assembly

1. The optical bench and sample compartment requires a level surface area of 76 X 152 cm (30 X 60 inches). This is in addition to the surface area required for the video display terminal, keyboard, and the Epson FX-85* printer. The HP 7470A* plotter will fit underneath the FTIR optical bench platform.

2. Bolt the right end of the Nicolet* optical bench platform to the left wall of the sample compartment.

3. Place the Nicolet* FTIR spectrometer optical bench on the optical bench platform. Bolt the right end of the optical bench to the left wall of the sample compartment.

7.1.2 Interior Sample Compartment Assembly

Refer to Figure 4-4 to determine the location of the electronic and optical components on the base of the sample compartment.

1. Install the stepper motor drive card. It can be identified by a row of red light emitting diodes (LED) along the top of the card. Mount it vertically in the rear right hand corner of the sample compartment. Check to make sure that it is secure in the connector.

   The LEDs indicate pulses on the stepper motor control lines.

LED #	FUNCTION
1-4	Rotation stepper motor pulses
5	Filter located
6	Filter located in position 1
7-10	Horizontal positioning stepper motor pulses
11	Outer ring of filters positioned (carousel right)
12	Inner ring of filters positioned (carousel left)

2. Install the cable interface card. It is mounted vertically directly in front of the stepper motor drive card. Mount this card so that the connectors face toward the front of the instrument.

3. Make sure that the horizontal sample carousel mounting track is secure and that all of the wires are intact.

4. Mount mirror number 1 (sample mirror) to direct the infrared beam from the FTIR optical bench to the floor of the sample compartment. This mirror mount is located high on the left wall of the sample changer at the entrance port of the infrared beam from the main optical bench.

5. Mount mirror number 2 (sample mirror), mirror number 3 (detector mirror), and the detector as shown in Figure 4-4.

7.1.3 Cable Connections

7.1.3.1 Interior Sample Compartment Cable Connections

1. The MC-2N* microcontroller consists of two printed circuit cards mounted horizontally directly in front of the cable interface card. Plug the microcontroller ribbon cable into the cable interface card with line 1 (red line on gray ribbon cable) aligned with the arrow on the left connector. Plug the other end of the ribbon cable to the top 26 pin port (J2) on the microcontroller. The plug will be in the correct orientation if the ribbon cable is not twisted.

2. Plug the 10 pin 3M connector and RS232 ribbon cable from the bus bar to the small 10 pin connector (J1) on the microcontroller. Align the arrows on the plug and connector. This is the RS232 port cable.

3. Plug the detector ribbon cable into the compartment back panel connector labeled "detector" and into the connector on the back of the detector circuit card. Align the arrows on the plugs and connectors.

7.1.3.2 Exterior Cable Connections

1. Thread the ribbon cable from the back of the sample compartment to the pass through the hole in the back of the FTIR optical bench labeled EXT. DETECTOR. The detector 2

connector is located on a vertically mounted circuit board in the rear left corner of the optical bench (see Figure 7-1).

2. Refer to Figure 7-2 for the remainder of the system cable connections. Attach the cables to the printer, plotter, video display, monitor, and keyboard. Attach the ribbon cable from Channel G to the back of the sample compartment. Attach the cables between the disk drive and the processor unit cabinets. Finally, attach the ribbon cable between the optical bench and the processor cabinet.

7.2 POWER-ON PROCEDURES

Turn on power to the system in the following order.

1. Turn on the computer - wait 30 seconds.
2. Turn on the disk drive - wait 30 seconds.
3. Turn on the optical bench.
4. Turn on the printer, plotter, and video display.
5. Turn on the sample compartment power supply.
6. Push the microcontroller reset button.
7. On the front of the processor cabinet, push START/STOP, then PROGRAM 2.
8. Push START/STOP, then PROGRAM 1.

The prompt on the display should be the symbol dx>. The system has been booted to the subdirectory PROGRAMS.

7.3 MIRROR ALIGNMENT

The mirrors in the FTIR optical bench were mounted and aligned by Nicolet* at the factory. They provide the basis on which the sample mirrors in the sample carousel compartment are mounted and aligned. The mirrors are off axis paraboloids. Figure 4-5 shows the proper focussing action of the mirrors in the optical bench. If it becomes difficult to align the mirrors in the sample compartment, switch the flipper mirror to the detector 1 position and observe the behavior of the laser beam reflecting off of the mirrors in the optical bench. To switch the flipper mirror to detector position 1, type: DET=1 SCB (CONTROL-S).

Four mirrors and the detector must be aligned. The laser beam can be used as a guide for the beam position. It should be noted that there will be more than one laser spot because of internal reflections of the laser beam in the interferometer beam splitter.

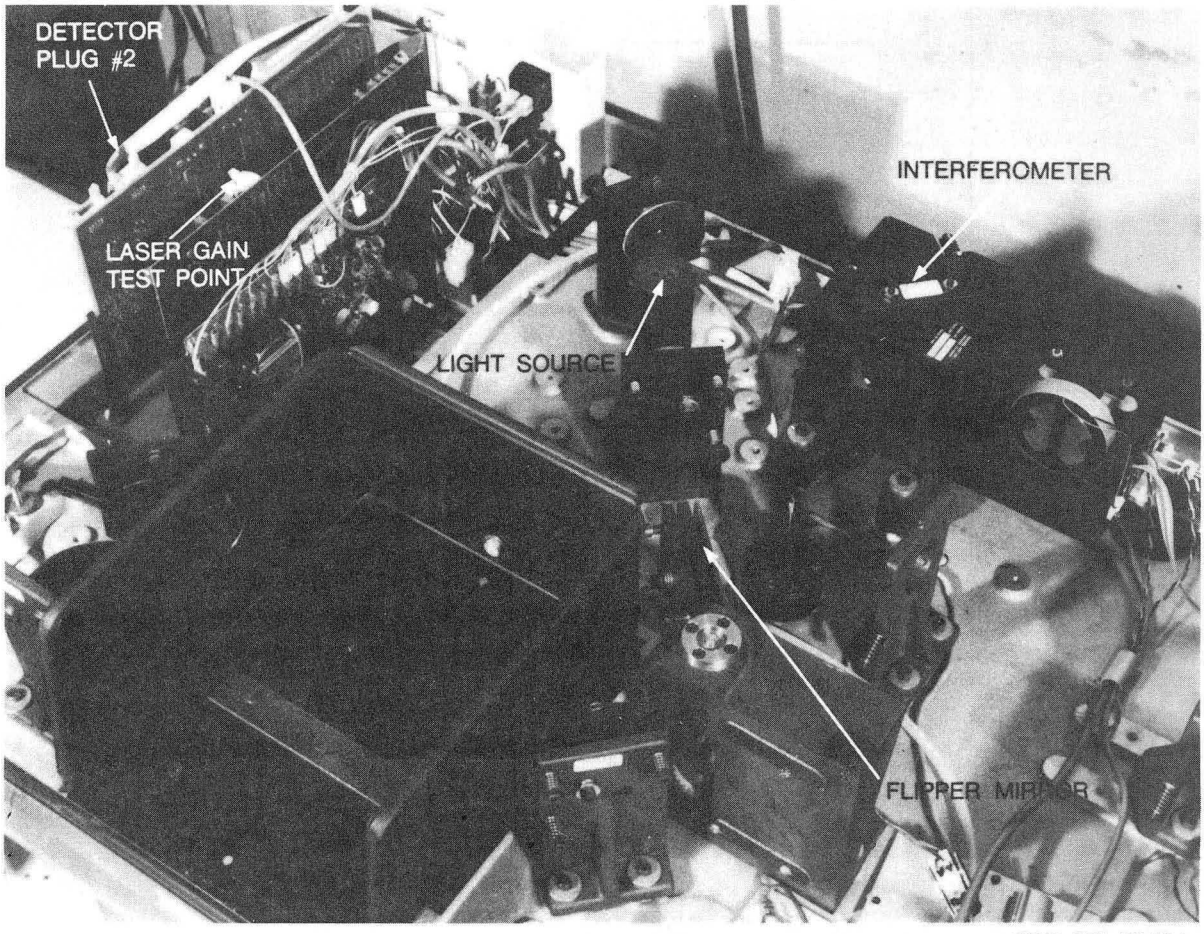

CBB 873-2249A

Figure 7-1 Interior of FTIR optical bench.

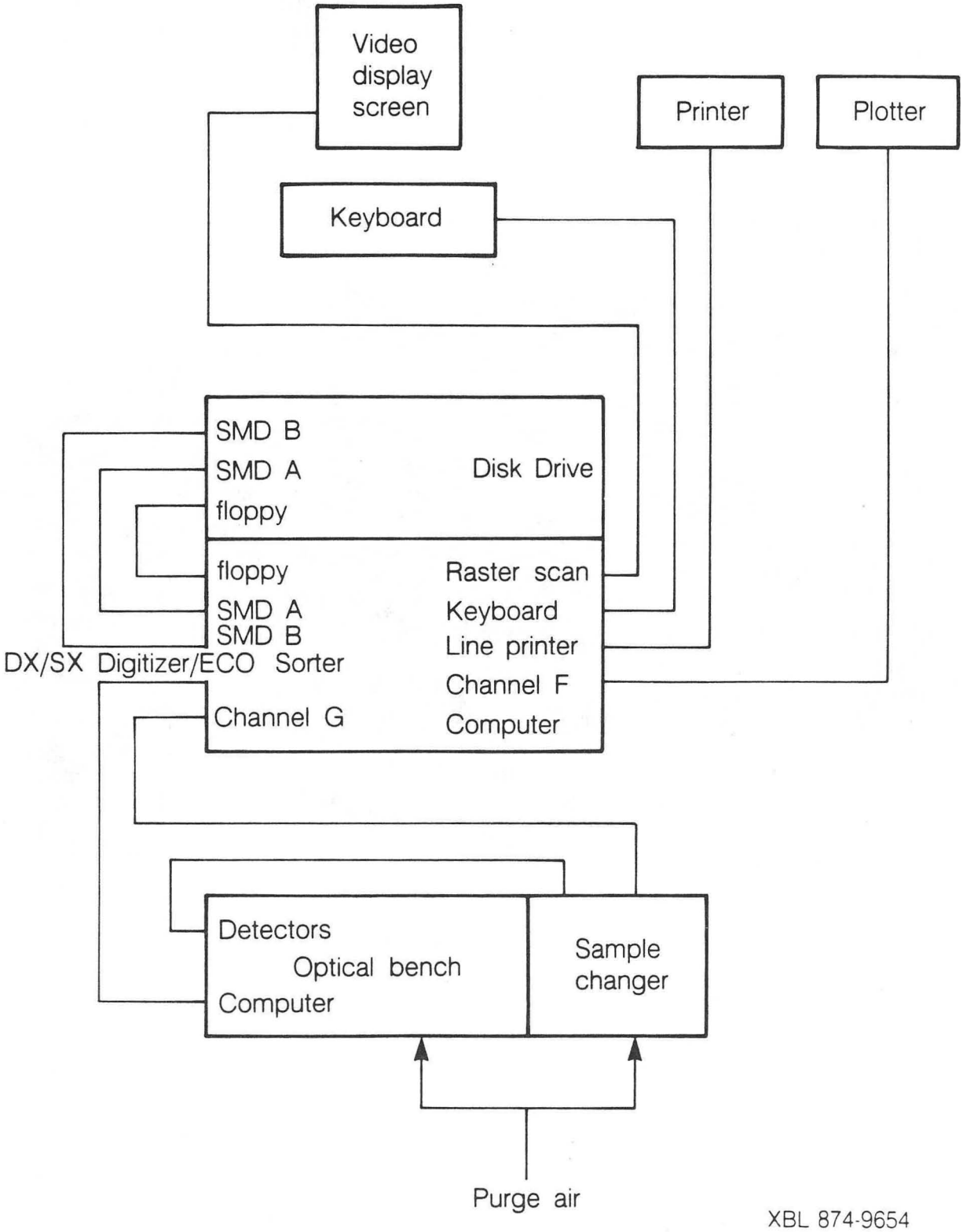

Figure 7-2 System cable connections.

1. First align the flipper mirror. Remove the cover to the FTIR optical bench and locate the mirror (see Figures 4-5 and 7-1). It is a large square mirror near the center of the main FTIR optical bench.

2. Remove sample mirrors 1 and 2 located in the sample compartment.

3. The position of the flipper mirror depends on the value of the variable DET. The detector variable DET, when mounted in the optical bench, should be set to DET=1. When the detector is mounted in the sample compartment, this variable should be set to DET=2. Type DET=2. The mirror will move to the appropriate position after a scan command has been executed. Type any one of the following commands: SCB, SCS, SCR while in the DX command mode. Type CONTROL-S to stop the scan routine prematurely.

4. Fix the laser beam on the score lines on the inside right-hand wall of the sample compartment by adjusting the alignment screws on the back of the flipper mirror. ADJUST ONLY THE TWO DIAGONAL ADJUSTMENT SCREWS!

5. Mount sample mirror number 1 and locate the laser beam on the score lines on the floor of the sample compartment. ADJUST ONLY THE TWO DIAGONAL ADJUSTMENT SCREWS!

6. Mount sample mirror number 2. Locate the laser beam on the center of the detector mirror. ADJUST ONLY THE TWO DIAGONAL ADJUSTMENT SCREWS!

7. Finally, align the detector. Coarse positioning is achieved by visually locating the laser beam on the detector. Fine positioning is achieved by using the ALIGN program. While in the DX command mode, type ALIGN and select height by typing H. The left hand column of negative numbers represents the beam intensity. Move the detector until this column of numbers is in the range -20,000 to -24,000 or as large as possible.

8. It may be necessary to adjust the interferometer to increase the intensity of the beam in the ALIGN program to -20,000. Use a long thin screw driver to turn the adjustment screws on the two long cylinders attached to the back of the interferometer. Do not expect the adjustment of the interferometer to vary linearly with each turn of the screws. Use the ALIGN program to monitor the intensity.

9. Continue the adjustment of all components until the maximum beam intensity is achieved.

7.4 SAMPLE COMPARTMENT TEST

1. Turn on the power supply in the sample compartment. The red light should turn on.

2. Mount the sample carousel on the axle and guide pin on the rotary stepper motor. WHEN EXERTING MANUAL TORQUE ON THE CAROUSEL AND STEPPER MOTOR, BE CAREFUL NOT TO DAMAGE THE GEARS IN THE STEPPER MOTOR!

3. The manual switches are on the panel on the right hand side of the compartment. There is one toggle switch to rotate the carousel at either a fast or a slow speed. The other toggle switch moves the carousel horizontally. Test each of these functions.

4. Attach the purge gas lines to the connectors at the rear of the FTIR optical bench and the sample compartment.

SECTION 8

OPERATING PROCEDURES

This report is not intended to be a substitute for the assembly and operating instructions supplied by the manufacturers of the various products used in this instrument. The user should become thoroughly familiar with the manuals describing installation of the FTIR. The user should also become familiar with the Nicolet* manuals concerning the NICOS operating system, the DX command mode, the menu mode, and the TED text editor, as well as the introductory text on FORTH programming.

Turn on the instrument following the instructions listed in Section 7.2 POWER ON PROCEDURES. Execute the desired custom DX program, i.e. DXAEROSOL1. Load a macro program with the following commands:

```
dx>  READ <filename>  <cr>

or

dx>  MAC  <cr>
     LOAD <filename>  <cr>
     RIR <cr>

dx>
```

Execute a macro program typing the name of the file.

SECTION 9

MAINTENANCE

9.1 ROUTINE MAINTENANCE PROCEDURES

1. Mirrors should be kept clean and free of dust. Do not wipe the surface of the mirrors. Use a compressed gas lens and mirror cleaner.

2. The lamp should be left on continuously. The lamp is a Nichrome wire filament that becomes brittle after it has been turned on. The lifetime of the lamp will decrease if it is turned on and off. The lamp lifetime is approximately six months. A replacement lamp should be kept available at all times.

9.2 SIMPLE REPAIR PROCEDURES

9.2.1 Lamp Replacement

Order a new source element for a 5DXB* FTIR (P/N 400-118800). To install the new lamp, remove the cylindrical cover (see Figure 7-1) and the old lamp. Install the new lamp so that the distance from the circular baseplate to the center of the coil in the filament is 7 cm (2.75 in.). Do not tighten the screw through the ceramic base too tightly to allow for expansion and contraction. Use ALIGN to adjust the mirror behind the lamp. ADJUST ONLY THE TWO DIAGONAL ADJUSTMENT SCREWS!

9.2.2 Laser Replacement

To replace the laser, turn off the optical bench. Unplug the high voltage connector. BE CAREFUL SINCE THERE COULD STILL BE A HIGH VOLTAGE CHARGE ON THE PLUG TO THE POWER SUPPLY! The power supply should be discharged to ground for safety. Loosen only the set screws on the top of the laser mounts! Remove the laser. Be careful not to damage the tiny mirror in front of the laser. Reverse these instructions to install the laser.

9.2.3 Laser Gain Adjustment

A malfunction in the mirror movement circuitry has been known to occur. This is characterized by a rapid and erratic clicking sound from the interferometer on the optical bench. Remove the cover to the optical bench and observe the moving mirror in the interferometer. The mirror will be moving erratically. The problem is due to the laser amplifier located on a small circuit board on the source side of the interferometer. The gain on this amplifier must be increased by adjusting the potentiometer on this circuit board. The analog test point for this amplifier is on another circuit board on the optical bench. This circuit board is next to the circuit board with the detector plug shown in Figure 7-1. The exact location of this test point is shown in the component layout in Figure 9-1. Attach an oscilloscope to the resistor shown in Figure 9-1. The output should be a 8-10 volt peak to peak signal. Adjust the potentiometer on the other circuit board on the interferometer until the output is correct. The mirror movement should be smooth and regular.

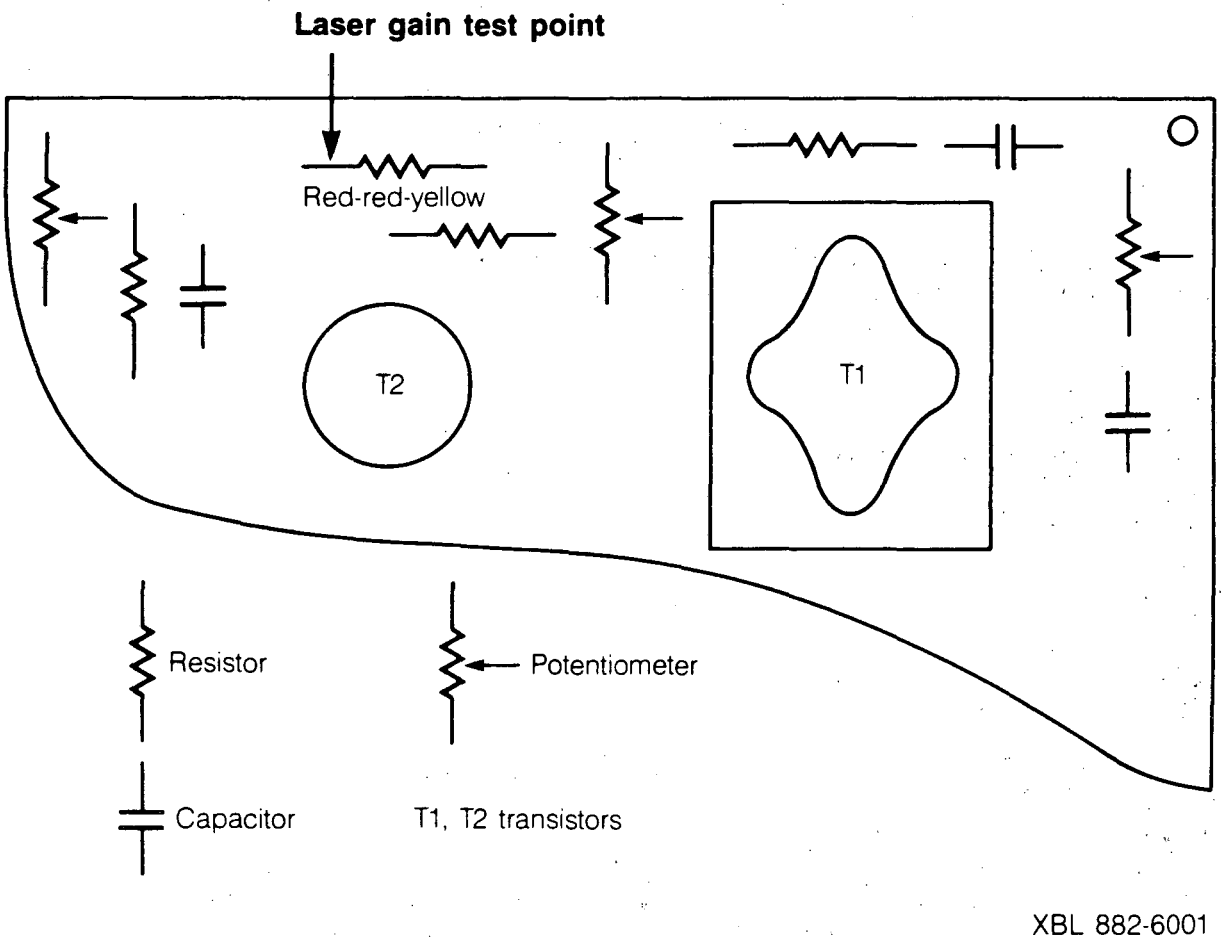

Figure 9-1 Laser gain test point.

SECTION 10

TECHNICAL ASSISTANCE

Technical assistance for hardware and software components of the FTIR and the sample compartment is available from the following sources:

Martin Pollard
Staff Scientist
Lawrence Berkeley Laboratory
Mail Stop: 70-110A
Berkeley, CA 94720
415-486-5130

Nicolet Analytical Instruments
5225-1 Verona Rd.
Madison, WI 53711

Specific questions concerning the hardware and software of the FTIR, as well as general questions concerning applications of FTIR, can be directed to the Nicolet Technical Information Center. The center is staffed with experienced maintenance and programming personnel as well as employees in training. If they cannot help you, they will direct you to someone in the company who can answer your question. The Technical Information Center is very responsive to customer questions. They can be reached during regular business hours in Madison, Wisconsin at telephone number 800-356-8088.

BASICON, Inc.
P.O. Box 25691
Portland, OR 97225

Specific questions concerning the BASICON microcontroller should be directed to BASICON in Portland, OR at 503-626-1012.

SECTION 11

SOURCE CODE LISTINGS

11.1 NICOLET* FTIR COMPUTER PROGRAM LISTINGS

11.1.1 STARTUP

The file STARTUP is located in the ROOT directory. STARTUP is executed when the computer is first booted by pushing the START/STOP and PROGRAM 1 buttons on the front of the computer cabinet. This file can be edited with TED so that the computer will execute any desired command sequence when the computer is turned on. The current STARTUP file enters the subdirectories USER and then PROGRAMS. After this the computer enters the DX Command mode using the custom DX program DXAEROSOL1. Finally, the flipper mirror on the main FTIR optical bench is set in the proper operating position for analysis in the sample compartment. This is done by setting DET=2 and then initiating a single scan with CLI (collect interferogram).

```
/** STARTUP.D / REV09 / 26FEB86
/** DXFTIR StartUp Batch File

RUN SHELL
RUN EXTEND.SHELL
RUN *FORK
RUN DEVICES
RUN CALENDAR
CD USER
CD PROGRAMS
.start
chini
str "
RUN DXAEROSOL1
DET=2
NSS=1 CLI
NSS=100
" inset
.end
xeq
```

11.1.2 CHGIN.4TH

CHGIN.4TH is located in the PROGRAMS subdirectory. It defines the input command used to receive input from the sample compartment microcontroller. The assembly language program ?INPUT was obtained from Nicolet Analytical Instruments. This program will read characters from the channel G input buffer and place the ASCII value of the character on the parameter stack of the computer.

The macro program PUTIN uses the assembly language program ?INPUT to read characters from the channel G RS232 port. PUTIN specifically looks for the ASCII character "1" which is the signal that a task executed by the MC-2N microcontroller has been completed. After receiving an ASCII "1," it looks for an ASCII character "?" which indicates that the MC-2N microcontroller is ready to receive input. As PUTIN reads characters from the input buffer, it removes the characters from the parameter stack. When PUTIN is completed, both the input buffer and the parameter stack should be empty.

```
FORTH DEFINITIONS

VARIABLE SPARE

OCTAL 2000021 SPARE !

OCTAL
( CH. G I/O FUNCTIONS )
( Assembly language programs written by Nicolet )

NEWNEXT

ASM ?INPUT
    ZER A ,
    JMS J@ SPARE JPAGE ,
    JMP HERE 2- JPAGE ,
    ACC A ,
    MMO M $ PSP ,
    ACC M @ PSP ,
DONE


( define new command for DX )

COMM DEFINITIONS
OCTAL

( receive the ASCII number )
( 1 into ch. G and )
( display on screen )

: PUTIN

    CR ." PUTIN "

    BEGIN
        ?INPUT
        61 =
    UNTIL

    BEGIN
        ?INPUT
        77 =
    UNTIL

    ?INPUT
    DROP
```

11.1.3 CHGOUT.4TH

CHGOUT.4th is located in the PROGRAMS subdirectory. It defines the output commands sent to the sample compartment microcontroller to control the position of the sample carousel. The assembly language program OUTPUT was obtained from Nicolet Analytical Instruments. The program OUTPUT sends an ASCII character, that corresponds to the value of the number at the top of the parameter stack, out of the channel G RS232 port.

The macro programs at the end of the program listing for CHGOUT.4TH send ASCII characters out of the channel G RS232 port. The programs OUT1, OUT2, OUT3 and OUT4 put an ASCII 1, 2, 3 and 4 into the variable EXITCHAR. These outputs select specific subroutines to be executed by the sample compartment microcontroller. The program OUTALL outputs the value of EXITCHAR to the channel G port. The baud rate is set to 1200 baud in the macro OUTALL by executing OUTPUT with the number 201100 at the top of the parameter stack. The ASCII number is constructed from the formula: decimal ASCII code + 128 converted to octal notation. For example, an ASCII "1" is equal to $49 + 123 = 160_{10} = 261_8$.

```
FORTH DEFINITIONS

VARIABLE EXITCHAR

OCTAL
( Ch.G I/O FUNCTIONS )
( Assembly language programs written by Nicolet )

NEWNEXT

ASM OUTPUT
    MEM A ^ PSP ,
    JMS J@ SPARE JPAGE ,
    JMP HERE 2- JPAGE ,
    ACC A ,
DONE


( define new command for DX )

COMM DEFINITIONS
OCTAL

( Put an ASCII character into the variable EXITCHAR )


( ASCII 1 into EXITCHAR )

: OUT1
    CR ." OUT1 "
    261 EXITCHAR !
STACK
;

( ASCII 2 into EXITCHAR )

: OUT2
    CR ." OUT2 "
    262 EXITCHAR !
;

( ASCII 3 into EXITCHAR )

: OUT3
    CR ." OUT3 "
    263 EXITCHAR !
;

( ASCII 4 into EXITCHAR )

: OUT4
    CR ." OUT4 "
    264 EXITCHAR !
;

( Output EXITCHAR to channel G RS232 port )
```

```
( 1200 baud )

: OUTALL
    CR ." OUTALL "
    2011000 OUTPUT

    BEGIN
        EXITCHAR @
        OUTPUT
        ?INPUT
        DUP 260 > SWAP
        265 < AND
    UNTIL

    215 OUTPUT
;
```

11.1.4 PROGRS

The file PROGRS is located in the PROGRAMS subdirectory. PROGRS contains a number of small programs useful for operations on a linear array of YCUR values. The value of YCUR is the spectral absorbance at a particular wavenumber. The wavenumber value is in XCUR. These routines are useful for statistical calculations and integration routines.

11.1.4.1 INITARRAY

This command will initialize 1000 cells of an array ARRAY1 with zeros. ARRAY1 will hold data for 1000 integers or 500 real data values. Real numbers such as the variable YCUR (the Y cursor position or absorbance value) require two cells for storage. Also, the counting variable N is initalized to 0.

11.1.4.2 LOADARRAY

This command will load the value of YCUR into the array ARRAY1 and increase the value of the variable N by 2. Real numbers such as the variable YCUR require two cells for storage. This function should only be used for arrays of real numbers, such as an array of YCUR values. N is the number of values loaded into ARRAY1 since it was initialized by INITARRAY.

11.1.4.3 ADDARRAY

This command will average the N numbers in ARRAY1 and put the result in the variable AVE.

11.1.4. 4 STDSUM

This command will calculate the variance of the N numbers in the array ARRAY1 using the value of the average in the variable AVE. The result is placed in the variable SUM1. ADDARRAY should be executed before STDSUM.

11.1.4.5 SQROOT

This command will take the square root of the number in the variable SUM1 and put it in the variable SQR. If executed after ADDARRAY and STDSUM, the value of the standard deviation will be left in the variable SQR. SQROOT is an iterative technique using the formula:

$$b_{k+1} = \frac{b_k}{x}\left(3 - \frac{b_k^2}{x}\right)$$

where first guess $< (5x)^{1/2}$

The macros INITARRAY, LOADARRAY, ADDARRAY, STDSUM, and SQROOT are useful for statistical calculations of spectral absorbance data. These programs can be found in the file PROGRS in the subdirectory PROGRAMS. The example macro program below will find the average and standard deviation of the absorbance values between 800 and 820 wavenumbers. The average will be stored in the variable AVE and the standard deviation will be stored in the variable SQR.

```
XCUR=800
INITARRAY

FOR I=1 TIL 20
      VALS
      LOADARRAY
      XCUR=XCUR+1
NXT I

ADDARRAY
STDSUM
SQROOT

"The average value is " AVE=
"The standard deviation is " SQR=
```

```
( PROGRS contains the necessary subroutines to take the )
( average and standard deviation of YCUR values in the )
( ftir spectra )


VARIABLE ARRAY1 2000 ALLOT
VARIABLE N
VARIABLE N1 2 ALLOT
VARIABLE AVE 2 ALLOT
VARIABLE DIFF 2 ALLOT
VARIABLE SUM1 2 ALLOT
VARIABLE SQR 2 ALLOT
VARIABLE B1 2 ALLOT
VARIABLE NUMELEMENTS
VARIABLE lowfreq 2 ALLOT
VARIABLE highfreq 2 ALLOT
VARIABLE i
VARIABLE last

COMM DEFINITIONS


( Load 1000 0'S into ARRAY1 )

: INITARRAY

   ARRAY1 1000 0 WFILL
   0 N !

;


( Save values of YCUR in ARRAY1 )
( Save first and last value of XCUR )

: LOADARRAY

   i @ 1 = IF
      xcur F@ lowfreq F!
   ENDIF

   last @ i @ = IF
      xcur F@ highfreq F!
   ENDIF

   ycur F@ ARRAY1 N @ + F!
   N @ 2 + N !

;

( Takes average of values in ARRAY1 )

: ADDARRAY

   0.0 AVE F!
   N @ 2 / NUMELEMENTS !
```

```
   0 N !

   NUMELEMENTS @ 0 DO
      CR
      ARRAY1 N @ + AVE F@ F+ AVE F!
      N @ 2 + N !
   LOOP

   NUMELEMENTS @ IFLOAT N1 F!
   CR
   N1 AVE F@ F/ AVE F!

;

( This routine takes the sample variance using the values )
( in ARRAY1 and the average of the values in ARRAY1 )

: STDSUM

   0.0 SUM1 F!
   0 N !

   NUMELEMENTS @ 0 DO
      AVE ARRAY1 N @ + F@ F- DIFF F!
      CR
      DIFF DIFF F@ F* DIFF F!
      DIFF SUM1 F@ F+ SUM1 F!
      N @ 2 + N !
   LOOP

   N1 1.0 F- FNEG N1 F!
   N1 SUM1 F@ F/ SUM1 F!

;

( Takes the square root of SUM1 )

: SQROOT

   2.0 B1 F!

   21 1 DO
      B1 SUM1 F@ F/ SQR F!
      SQR B1 F@ F+ F2/ SQR F!
      SQR F@ B1 F!
   LOOP

;

IVAR DEFINITIONS

&&IPARAM LOWFREQ ] lowfreq [
&&IPARAM HIGHFREQ ] highfreq [
&&IPARAM I ] i [
&&IPARAM LAST ] last [
```

11.1.5 INT

The file INT is located in the subdirectory PROGRAMS. The program INT integrates the area of a wavenumber interval using the trapezoidal rule. First, INITARRAY is executed and then ARRAY1 is loaded with YCUR values in a given wavelength interval. The integration is performed on the elements of ARRAY1 by executing the command INTEGRATE. The result is put into the variable INTRES.

An example of an integration routine is shown below. The wavenumber interval is 1400-1500 cm^{-1}. The baseline is set to zero throughout the entire interval.

```
INITARRAY
BASELN=0
LXF=1400 FXF=1500

FOR I=LXF TIL FXF
     XCUR=I VALS
     LOADARRAY
NXT I

INTEGRATE
```

The result is in the variable INTRES.

```
( PROGRAM INT IS AN INTEGRATION PROGRAMS TO HELP )
( IN THE INTEGRATION OF THE SULFATE PEAK OVERLAPING )
( THE LARGE TEFLON PEAK.
( THE BASELINE VALUE SHOULD BE DETERIMINED AND PUT INTO BASELN )
( THIS INTEGRATION USES A LINEAR INTERPOLATION, )
( I.E. THE TRAPZOIDAL RULE.  THE BASELINE IS DRAWN )
( HORIZONTAL WITH THE VALUE BASELN )
( THE RESULTS OF THE INTEGRATION ARE IN INTRES )

VARIABLE SUM2 2 ALLOT
VARIABLE baseln 2 ALLOT
VARIABLE intres 2 ALLOT

DECIMAL

COMM DEFINITIONS

: INTEGRATE

N @ 2 / NUMELEMENTS !

0 N !
0.0 SUM2 F!

baseln F@ F.

NUMELEMENTS @ 0 DO

   CR ARRAY1 N @ + F@ F.
   ARRAY1 N @ + F@ baseln F- ARRAY1 N @ + F!
   ARRAY1 N @ + F@ F.
   N @ 2 + N !

LOOP

2 N !

NUMELEMENTS @ 1 - 1 DO
   SUM2 F@ ARRAY1 N @ + F+ SUM2 F!
   N @ 2 + N !
LOOP


ARRAY1 N @ + F@
F2/ SUM2 F+ SUM2 F!
CR

ARRAY1 F@ F2/ SUM2 F+ SUM2 F!

SUM2 F@ intres F!


;

FVAR DEFINITIONS
```

```
&&FPARAM BASELN ] baseln [
&&FPARAM INTRES ] intres [
```

----- End of File -----

11.1.6 TIMECLOCK

The file TIMECLOCK is located in the subdirectory PROGRAMS. The command CLOCK will cause the program to pause for the number of seconds put into the variable SECONDS. The time interval is calculated from the current time and the number of seconds past midnight.

```
( THIS PROGRAM WILL RESULT IN A PAUSE EQUAL )
( TO THE VARIABLE SECONDS )
( THE PROBLEM OF MIDNIGHT IS TAKEN CARE OF )

VARIABLE STARTIME
VARIABLE DELTA
VARIABLE seconds
VARIABLE nsec

COMM DEFINITIONS

( Get number of seconds past midnight )

: SETIM
   [ OCTAL ]
   71 nsec 1MOVE
;

( Wait the number of seconds in SECONDS )

: CLOCK

SETIM

nsec @ STARTIME !

250600 STARTIME @ - DELTA !

DELTA @ seconds @ < IF

   BEGIN
      SETIM nsec @ seconds @ =
   END

ELSE

   BEGIN
      SETIM nsec @ STARTIME @ -
      seconds @ =
   END

ENDIF
;

IVAR DEFINITIONS
&&IPARAM SECONDS ] seconds [
```

----- End of File -----

11.1.7 HELPMEAS

The macro program HELPMEAS is a brief help message which describes how to load and execute the programs necessary for ambient filter analysis. HELPMEAS is a command that is executed from the dx> prompt when using the program DXAEROSOL1.

```
CRT HELPMEAS

    CR CR CR
    "     Type CONTROL-T to toggle the display of the graphics screen."
    CR CR CR PAU
    CR CR CR CR CR CR CR
    CR "The filter analysis procedures are:"
    CR CR
    CR "   1.  Create a subdirectory for the filter spectra."
    CR
    CR "   2.  Save filter spectra of blank filters before"
    CR "       air sampling."
    CR CR "   3.  Save filter spectra of filters after air sampling."
    CR CR "   4.  Analyze filters for collected compounds."
    CR CR CR CR CR
    "   To measure filter spectra of blank and sample filters"
    CR "execute DXAEROSOL1 at the NICOS> prompt."
    CR CR "   type: READ (followed by a carriage return)"
    CR CR "   type: SCANFILTERS"
    CR CR "   Run the programs by typing: SCANFILTERS"
    CR CR "   Follow the directions given in the program"
    CR CR CR CR CR PAU
    CR CR CR CR CR CR CR CR
    CR "   To analyze filter spectra for collected compounds"
    CR "execute DXAEROSOL1 at the NICOS> prompt."
    CR CR "   type: READ"
    CR CR "   type: ANALYZE"
    CR CR "   Run the program by typing: ANALYZE"
    CR CR "   Follow the directions given in the program"
    CR CR CR CR CR
    "   To enter a pathname type the names of successive"
    CR "subdirecties, separated by commas, leading to the"
    CR "the desired subdirectory."
    CR CR CR CR CR CR CR CR CR

END
```

11.1.8 SCANFILTERS

SCANFILTERS allows the user to measure and store the spectral files of a set of filters mounted in the sample carousel. A subdirectory must be created with the NICOS operating system before this program is used. The default subdirectory in PROGRAMS is SCANFILES. Both the reference spectra of blank filters and the sample spectra of loaded filters can be measured using this program. Normally, the reference spectra and the sample spectra will be stored in the same subdirectory.

To run SCANFILTERS while in DXAEROSOL1, type READ SCANFILTERS <cr>. When the dx> prompt returns, type: SCANFILTERS. Follow the directions given by the program.

The user will be asked to enter a filename, a pathname, the number of filters, the number of scans per filter, and a comment to be appended to each spectrum. The filters must be loaded into the carousel consecutively, beginning at filter location number 1. Each filename will be labeled with the location of the filter in the carousel. For example, a filename REF will be stored as REF.001 if it is located in the first position in the carousel. The carousel location will also be appended with the file comment string.

To edit the macro program SCANFILTERS, load the program into the macro editor by typing:

```
dx>  MAC <cr>                    (<cr> = carriage return)
me>  LOAD <cr>
     SCANFILTERS <cr>            (now edit the file)
me>  SAVE <cr>                   (save edited file)
     "filename" <cr>
me>  RIR <cr>                    (return to the dx mode)
dx>  SCANFILTERS <cr>            (to run the edited program
```

```
( Program ANALYZE )

( For analysis of ambient aerosols )
( collected on Teflon filters )

(          * * * * * VARIABLE DECLARATIONS * * * * * )

    STRING SAMPLENAME
    STRING REFNAME
    STRING COMMENT
    STRING PATHNAME

    INTEGER NUMFILTERS

(          * * * * *  MOVEFILTERS  * * * * * )

( Move filters into beam and analyze )

CRT MOVEFILTERS

FXF=1800 LXF=500
LYA=1
SECONDS=3

OUT1 OUTALL PUTIN CLOCK

OUT4 OUTALL PUTIN CLOCK

FOR I=1 TIL NUMFILTERS

    EXT=I
    CR CR CR
    CR "Measuring background for filter " EXT= CR CR
    SCB
    OUT3 OUTALL PUTIN CLOCK
    CR CR CR
    CR "Measuring filter " EXT= CR CR
    SCS RAS ABS
    TIS="( "+SAMPLENAME+EXT+" )  "+COMMENT
    DSS
    PDS SAMPLENAME+"."+EXT+" [,"+PATHNAME+"]"
    OUT2 OUTALL PUTIN CLOCK
    OUT4 OUTALL PUTIN CLOCK

NXT I

END

(          * * * * * GETFILTERS * * * * * )

( Get information and measure any set of filters )

CRT SCANFILTERS
```

```
PATHNAME="SCANFILES"

CR CR CR CR
CR "Enter filename " SAMPLENAME
CR CR CR CR
CR "Enter subdirectory name to store spectra" PATHNAME
CR CR CR CR
"Enter the number of filters " NUMFILTERS
CR CR CR CR
"Enter the number of scans per filter " NSS
CR CR CR CR
"Enter a single line of comments to enter into spectral file" COMMENT
CR CR CR CR

NSB=NSS
SECONDS=3

"Place filters in the outer ring of the carousel" CR
"Put the first filter in position number 1" CR
"Orient the filters with the score marks on the carousel" CR

CR
PAU

MOVEFILTERS

CR CR
CR "                * * *  FINISHED WITH GETFILTERS  * * *"
CR CR CR


END
```

11.1.9 ANALYZE

ANALYZE is a macro program to analyze the infrared spectra of Teflon* air filters for the presence of sulfate, ammonium nitrate and elemental carbon. The specific details of the spectral analysis techniques are described in the manual FOURIER TRANSFORM INFRARED SPECTROSCOPY OF AMBIENT AEROSOLS. The program ANALYZE also illustrates the use of macro programs called from other macro programs.

To load ANALYZE while in DXAEROSOL1, type: READ ANALYZE <cr>. When the dx> prompt returns, type: ANALYZE to run the program. The analysis requires that the reference spectra be measured before air sampling. Both the reference and sample spectra must already exist as files on the disk to use the program. NOTE: It may not be possible to load both SCANFILTERS and ANALYZE because of limited computer memory. To load ANALYZE, return to the NICOS operating system, execute DXAEROSOL1, and then load ANALYZE by typing: READ ANALYZE <cr>.

The printer should be set to a new page and automatic form feed should be enabled. The user will be asked to enter two lines of comments which will be printed at the top of the analysis results. Enter the filenames for the reference and sample filter spectra saved with SCANFILTERS. Enter the pathname to the subdirectory where the filter spectra have been stored. Finally, enter the numbers of the first and last filters to be analyzed. The filters must be analyzed in numerical order.

Analysis of the filter spectra requires background subtraction to eliminate interfering Teflon* absorption bands. Correction for substrate background is achieved by subtracting the spectrum of the blank filter from the spectrum of the same filter after air sampling. The resulting spectrum is due only to absorption of the collected particles and not due to absorption of the Teflon* filter. The program ANALYZE will automatically perform a complete background subtraction of the Teflon* substrate and then analyze the resulting spectrum for sulfate, ammonium nitrate, and elemental carbon.

The particle analysis will provide accurate measurements of sulfate deposition on the filter. The analysis is based on ammonium sulfate calibration standards prepared in the laboratory. The ammonium nitrate analysis procedure has only been developed for laboratory generated standards. Currently, the analysis assumes a horizontal baseline underneath the ammonium nitrate absorption band. This is not adequate for ambient air samples. The routine to calculate the baseline for the ammonium nitrate absorption band will have to be modified to give an accurate measurement of this compound in ambient air samples. This is a subject for future research. The results for elemental carbon are presented as both an integrated area of the 650-666 cm-1 region of the spectrum and a particle concentration in mg/cm2. The calibration equation is based on the results of a field experiment in which both Teflon* and quartz filters were collected in parallel and analyzed for elemental carbon. The quartz filter analysis served as the standard measurements for elemental carbon deposition on the filters.

To edit the macro program ANALYZE load the program into the macro editor by typing:

```
dx>  MAC <cr>                    (<cr> = carriage return)
me> LOAD <cr>
     ANALYZE <cr>                (now edit the file)
me> SAVE <cr>                    (save edited file)
     "filename" <cr>
me> RIR <cr>                     (return to the dx mode)
dx>  ANALYZE <cr>                (to run the edited program)
```

```
( Program ANALYZE )

( For analysis of ambient aerosols )
( collected on Teflon filters )

(          * * * * * VARIABLE DECLARATIONS * * * * * )

    STRING SAMPLENAME
    STRING REFNAME
    STRING COMMENT
    STRING PATHNAME
    STRING COMMENT1
    STRING COMMENT2

    INTEGER NUMBER
    INTEGER K
    INTEGER LIMIT
    INTEGER TEMP3
    INTEGER FIRSTFILT
    INTEGER LASTFILT

    REAL XVAL
    REAL YVAL
    REAL S1
    REAL SX
    REAL SY
    REAL SXX
    REAL SXY
    REAL DENOM
    REAL SLOPE
    REAL INTERCEPT
    REAL TEMP
    REAL TEMP1
    REAL TEMP2
    REAL TEMP4
    REAL ADJ
    REAL TT
    REAL AVE1
    REAL Q1
    REAL Q4
    REAL AMM1
    REAL AMM2
    REAL AMM
    REAL SULFAREA
    REAL BLINE


(          * * * * * LEAST SQUARES * * * * )

( Least squares fit to a straight line )
( Initialize with NUMBER=0 )

 CRT LEASQ
    IF NUMBER EQZ
     THEN                ( first data pair )
        S1=0
```

```
        SX=0
        SXX=0
        SY=0
        SXY=0
        DENOM=0
        SLOPE=0
        INTERCEPT=0
     ELSE                ( all other data pairs )
        S1=S1+1
        SX=XVAL+SX
        SXX=XVAL*XVAL+SXX
        SY=YVAL+SY
        SXY=XVAL*YVAL+SXY
        DENOM=S1*SXX
         DENOM=SX*SX-DENOM
        SLOPE=S1*SXY
         SLOPE=SX*SY-SLOPE
        INTERCEPT=SY*SXX
         INTERCEPT=SX*SXY-INTERCEPT
    ENDIF
    SLOPE=SLOPE/DENOM
    INTERCEPT=INTERCEPT/DENOM

    NUMBER=NUMBER+1
  END

(          * * * * * BASELINE * * * * * )

( Don't use baseline subtraction in programs INT )

CRT BASELINE

BASELN=0

END

(          * * * * *  BASELIN  * * * * * )

( Special baseline for laboratory ammonium nitrate experiments )

CRT BASELIN

BLINE=TEMP4/50

END

(          * * * * *  INTEGRAT1  * * * * * )

( Integrate area with no baseline subtraction )

CRT INTEGRAT1

BASELN=0
```

```
INITARRAY

FOR I=LXF TIL FXF
    XCUR=I VALS
    YCUR=YCUR
    LOADARRAY
NXT I

INTEGRATE

END

(          * * * * *  INTEGRATION  * * * * * )

( Integrate area with subtraction of calculated baseline )

CRT INTEGRATION

INITARRAY

FOR I=LXF TIL FXF
    XCUR=I VALS
    TEMP=SLOPE*XCUR
    TEMP=TEMP+INTERCEPT
    YCUR=YCUR-TEMP
    LOADARRAY
NXT I

INTEGRATE

END

(          * * * * * GETINFO * * * * * )

( Get information, measure sample filters, )
( and analyze filters for particles )

CRT GETINFO

PATHNAME="SCANFILES"

CR CR CR CR
CR "Enter first comment line" COMMENT1
CR CR CR CR
CR "Enter second comment line" COMMENT2
CR CR CR CR
CR "Enter filename for reference files" REFNAME
CR CR CR CR
CR "Enter filename for sample files" SAMPLENAME
CR CR CR CR
CR "Enter subdirectory of files" PATHNAME
CR CR CR CR
CR "Enter the first filter number " FIRSTFILT
```

```
CR CR CR CR
CR "Enter the last filter number " LASTFILT
CR CR CR CR
SECONDS=3

"Turn on printer"
CR CR "To begin program :"

PAU

END


(          * * * * *  ANALYZE  * * * * * )

( Perform particle analysis for sulfate, ammonium nitrate, )
( and elemental carbon )

CRT ANALYZE

GETINFO

OUTDEV=132
CR CR CR CR
CR COMMENT1=
CR COMMENT2=
OUTDEV=4

( Repeat for each filter )

FOR K=FIRSTFILT TIL LASTFILT

EXT=K

( Display defaults for reference spectra )

LYA=.35 FYA=-0.05
FXF=1550 LXF=450
FCR=1.3 DFCR=.1

( Path name for blank filter spectra )

GDR REFNAME+"."+EXT+" ["+PATHNAME+"]"
DSR

TEMP1=0

BEGIN

( Path name for sample filter spectra )

GDS SAMPLENAME+"."+EXT+" ["+PATHNAME+"]"

( Display defaults for sample spectra )

FCR=FCR-DFCR
```

```
CR "FCR = " FCR=
FCS=1 DIF
FXF=1550 LXF=450
FYA=-0.05 LYA=.350
DSS

( Calculate least squares fit to a line for data )
( in the region 572-576 cm-1 and 447-480 cm -1 )

NUMBER=0 LEASQ NUMBER=1

FOR I=567 TIL 572
    XCUR=I VALS
    XVAL=XCUR YVAL=YCUR
    LEASQ
NXT I

FOR I=447 TIL 480
    XCUR=I VALS
    XVAL=XCUR YVAL=YCUR
    LEASQ
NXT I

BASELINE

( Get area above least squares line )

LXF=490 FXF=535

INTEGRATION

( Print area to screen )

CR "                    AREA = " INTRES=

IF INTRES GTZ THEN
    ADJ=DFCR/10.0
    FCR=TEMP1+ADJ
    DFCR=DFCR/10.0
ENDIF

TEMP1=FCR TEMP2=INTRES

TT=DFCR-.00002

( Return to beginning of loop if area is negative )
( Adjust the value of FCR )

UNTIL TT LTZ

IF INTRES LTZ THEN
    INTRES=-1*INTRES
ENDIF

IF TEMP2 LTZ THEN
```

```
    TEMP2=-1*TEMP2
ENDIF

TEMP=INTRES-TEMP2

IF TEMP GTZ THEN
    FCR=TEMP2
    ELSE FCR=TEMP1
ENDIF

CR "BEST FCR IS = " FCR=

( Best FCR has been determined )
( Get best difference spectrum )

FXF=1550 LXF=450

( Path name of sample filter spectra )

GDS SAMPLENAME+"."+EXT+" ["+PATHNAME+"]"
DIF
DSS

( Integrate sulfate band at 620  m-1 )

NUMBER=0 LEASQ NUMBER=1

FOR I=565 TIL 590
    XCUR=I VALS
    XVAL=XCUR YVAL=YCUR
    LEASQ
NXT I

FOR I=660 TIL 670
    XCUR=I VALS
    XVAL=XCUR YVAL=YCUR
    LEASQ
NXT I

BASELINE

LXF=595 FXF=635

INTEGRATION

SULFAREA=INTRES

INTRES=22.2299*INTRES-.4429

OUTDEV=132
CR CR "FILTER " K=
CR "FCR = " FCR=
CR "SULFATE (640-596 CM-1)              = " INTRES= " UG/CM2 "
OUTDEV=4

( Begin ammonium nitrate calculation )
```

```
( Get baseline average of YCUR 1560-1610 cm-1 )

TEMP4=0

FOR I=1560 TIL 1610
    XCUR=I VALS
    TEMP4=TEMP4+YCUR
NXT I

BASELIN

( Subtract horizontal baseline from spectrum )

XCUR=1280

FOR I=1 TIL 280
    VALS
    YCUR=YCUR-BLINE
    SETS
    XCUR=XCUR+1
NXT I

( Calc ammonium band from measurement of sulfate band )
( area and subtract from ammonium nitrate band area )
( 1280-1560 cm-1 )

Q1=-.0024+.0814*SULFAREA
Q4=.0026+.523*Q1

XCUR=1280
FOR I=1 TIL 280
    VALS
    TEMP=XCUR-1422.29
    TEMP=TEMP*TEMP
    TEMP=.004212*TEMP
    TEMP=TEMP+1
    AMM1=Q1/TEMP

    TEMP=XCUR-1449.22
    TEMP=TEMP*TEMP
    TEMP=.002560*TEMP
    TEMP=TEMP+1
    AMM2=Q4/TEMP

    AMM=AMM1+AMM2


    YCUR=YCUR-AMM
    SETS

    XCUR=XCUR+1
NXT I


( Integrate ammonium nitrate peak area )
```

```
LXF=1320 FXF=1560

INTEGRAT1

ZOT

INTRES=1.0054*INTRES-1.2096

OUTDEV=132
CR "AMMONIUM NITRATE (1280-1560 CM-1)     = " INTRES= " UG/CM2 "
OUTDEV=4


( Measure elemental carbon )

SECONDS=3 CLOCK

BASELN=0

INITARRAY

FOR I=650 TIL 666
    XCUR=I VALS
    LOADARRAY
NXT I

INTEGRATE

OUTDEV=132
CR "ELEMENTAL CARBON (650-666 CM-1) AREA = " INTRES=

INTRES=.1042*INTRES-.2762

CR "ELEMENTAL CARBON (650-666 CM-1)      =" INTRES= " UG/CM2 "
OUTDEV=4


NXT K

CR CR
"              * * *  FINISHED WITH PARTICLE ANALYSIS  * * *"
CR CR

END
```

11.2 BASICON SOURCE CODE LISTINGS

11.2.1 BASICON BASIC Program

A complete description of the TINY BASIC commands is found in the MC-1N manual; however, the following program is easily understood if the direct memory accessing capabilities is explained here. All memory locations are hexadecimal numbers beginning with the # sign. The @ sign links TINY BASIC to specific memory locations. The value of the memory location #B800 can be read into a variable with a statement such as: A = @#B800. A hexadecimal value (#82) can be written to a memory location with a statement such as: @#B803 = @#82. Finally, a machine code subroutine can be called with a LINK statement such as: LINK#8400. This will execute the subroutine beginning at location #8400. The input port A is located at address #B800 and the output port B is at address #B801.

After reset or power up of the MC-2N* microprocessor, the main program sets the 8255* ports for input and output, then it waits for a command code from the Nicolet* computer at the INPUT statement in line 40. After the input is received, one of the four subroutines at lines 1000, 2000, 3000, or 4000 is chosen. There should be some delay between inputs to the sample compartment to allow the program to return to the INPUT statement on line 40. The CLOCK command with the variable SECONDS=1 will cause a delay, i.e. SECONDS=1 OUT2 OUTALL PUTIN CLOCK OUTALL PUTIN will move the sample carousel clockwise two filter positions. The input statement at line 40 expects an ASCII integer as input. Any other input will cause an error message to be printed to the RS232 line and a return to the INPUT statement. Further input must be delayed until the error message has been printed and the program has returned to the INPUT statement on line 40. An integer input outside the range 1-4 will not select a subroutine and the program will return to the INPUT statement again. At the end of each subroutine E=1 and an ASCII 1 is printed to the RS232 port as a signal that the subroutine has finished it's task.

```
0    Clear
10   @#B803=#82 : A=#B800 : B=#B801

20   E=0
30   DO
40   INPUT D
50   IF D=1 GOSUB 1000
60   IF D=2 GOSUB 2000
70   IF D=3 GOSUB 3000
80   IF D=4 GOSUB 4000
90   IF E=2 GOSUB 5000
100  UNTIL E=1
110  DELAY 1000
120  FOR I=1 TO 15
130  PRINT "1"
140  NEXT I
150  GOTO 20
```

The sample carousel can be rotated very quickly with a machine code subroutine, but it cannot stop at a filter location accurately at this speed. The subroutine at line 1000 quickly rotates the sample carousel, for at most one complete revolution, to find the approximate location of the position of the first filter. It then continues rotation for a fixed number of pulses which positions the carousel almost to the first filter position. The BASIC program then locates the first filter more slowly and accurately. It will take 13-22 seconds to find the position of the first filter, depending on the starting position of the sample carousel.

Go to position 1

```
1000  X=1
1010  LINK#8400
1020  DO
1030  @A=1 : @A=0
1040  UNTIL 0=@B AND 3
1050  E=1
1060  RETURN
```

The subroutine at line 2000 slowly moves the sample carousel to the next filter position. First, it must move the carousel until it detects that the limit switch is no longer at the indent at the previous filter. Then it moves the carousel to the next filter position.

Go to the next filter position

```
2000  N=0
2010  FOR I=1 TO 1
2020  @A=1 : @A=0 : N=N+1
2030  NEXT I
2040  IF (0=@B AND 3) OR (2=@B AND 3) GOTO 2010
2050  DO
2060  @A=1 : @A=0 : N=N+1
2070  DELAY 50
2080  UNTIL (0=@B AND 3) OR (2=@B AND 3)
2090  IF N > 130 THEN GOTO 2200
2100  E=1
2105  X=X+1
2110  RETURN

2200  E=2
2210  GOTO 2105
```

The subroutines at lines 3000 and 4000 move the sample carousel horizontally to the left and right. These routines move the carousel until the limit switches detect and stop the motion. The motion is actually stopped by the circuitry on the stepper motor driver card. These program instructions just detect that the limit switches have closed.

Move carousel from left position to the right position

```
3000  DO
3010  LINK#8470
3020  UNTIL 8=@B AND 12
3030  E=1
3040  RETURN
```

Move carousel from right position to the left position

```
4000  DO
4010  LINK#84C0
4020  UNTIL 4=@B AND 12
4030  E=1
4040  RETURN
```

This routine is activated when more that 130 pulses are output in an attempt to locate the next filter. This routine will make one attempt to locate the filter again. The program keeps track of how many filters have been selected since the first filter.

Find skipped filter

```
5000  G=X-1
5010  GOSUB 1000
5020  FOR K=1 TO G
5030  GOSUB 2000
5040  IF N>120 GOTO 5500
5050  NEXT K
5060  E=1
5070  RETURN
```

Abort

```
5500  FOR I=1 TO 5
5510  @A=1 : @A=0
5520  NEXT I
5530  IF (0=@B AND 3) OR (2=@B AND 3) GOTO 5500
5540  STOP
```

11.2.2 BASICON Machine Code Subroutines

The machine code programming of the 8073* microprocessor is described in the National Semiconductor Users Manual for the 70-Series Microprocessor. All integer constants are in hexadecimal notation and all addressing is pointer relative.

Abbreviations

A	-	Accumulator
P2	-	Pointer 2
P3	-	Pointer 3
ADDR	-	address (hexadecimal)
A --> P3	-	The value of the accumulator is put into the memory location pointed to by pointer 3.

Get the approximate location of position 1

Starting location in memory - #8400

```
27
01    ADDR B801 --> P3
B8

26
00    ADDR B800 --> P2
B8

C3
00    P3 --> A

D4
03    A AND 03 --> A

6C
16    BRANCH IF A=0

C4
01    1 --> A

CA
00    A --> P2

C4
FF    FF --> A
FC
01    A-1 --> A       WAIT ROUTINE
7C
FC    BRANCH IF A#0

C4
00    0 --> A

CA
00    A --> P2

C4
FF
FC
01    WAIT ROUTINE
7C
FC

74
E4    BRANCH UNCONDITIONALLY

5C    RETURN
```

Get almost to location 1 - BASIC takes care of the final positioning

```
27
55    ADDR 8455 --> P3
84

84
C8    ADDR 06C8 --> P2
06

8B
00    EA --> P3

C4
01    01 --> A

CA
00    A --> P2

C4
FF
FC
01    WAIT ROUTINE
7C
FC

C4
00    0 --> A

CA
00    A --> P2
```

```
C4
FF
FC
01    WAIT ROUTINE
7C
FC

C3
00    P3 --> A

FC
01    A-1 --> A

CB
00    A --> P3

7C
E4    BRANCH IF A#0

C4
C8    C8 --> A

CB
00    A --> P3

C3
01    P3+1 --> A

FC
01    A-1 --> A

CB
01    A --> P3+1

7C
D8    BRANCH IF A#0

5C    RETURN
```

<u>Machine code to translate the carousel from left to right</u>

Starting location in memory - #8470

```
27
65    ADDR 8465 --> P3
84

26
00    ADDR B800 --> P2
B8

84
C8    06C8 --> EA
06

8B
00    EA --> P3

C4
06    06 --> A

CA
00    A --> P2

C4
FF
FC
01    WAIT ROUTINE
7C
FC

C4
04    04 --> A

CA
00    A --> P2

C4
FF
FC
01    WAIT ROUTINE
7C
FC

C3
00    P3 --> A

FC
01    A-1 --> A

CB
00    A --> P3

7C
E4    BRANCH IF A#0

C4
C8    C8 --> A

CB
00    A --> P3
```

```
C3
01    P3+1 --> A

FC
01    A-1 --> A

CB
01    A --> P3+1

7C
D8    BRANCH A#0

5C    RETURN
```

Transfer control back to BASIC program to finish translation and check to see if it is at the end of the track.

Machine code to translate the carousel from right to left

Starting location in memory - #84C0

```
27
15    ADDR 8515 --> P3
85

26
00    ADDR B800 --> P2
B8

84
C8    06C8 --> EA
06

8B
00    EA --> P3

C4
02    02 --> A

CA
00    A --> P2

C4
FF
FC
01    WAIT ROUTINE
7C
FC

C4
00    02 --> A

CA
00    A --> P2

C4
FF
FC
01 WAIT ROUTINE
7C
FC

C3
00    P3 --> A

FC
01    A-1 --> A

CB
00    A --> P3

7C
E4    BRANCH IF A#0

C4
C8    C8 --> A

CB
00    A --> P3

C3
01    P3+1 --> A

FC
01    A-1 --> A

CB
01    A --> P3+1

7C
D8    BRANCH A#0

5C    RETURN
```

Transfer control back to BASIC program to finish translation and check to see if it is at the end of the track.

SECTION 12

CIRCUIT BOARD SCHEMATICS

Figure 12-1 is a schematic of the Stepper Motor Drive Card.

The stepper motor drive card can be identified by a row of red light emitting diodes (LED) along the top of the card. They indicate pulses on the stepper motor control lines.

LED#	FUNCTION
1-4	Rotation stepper motor pulses
5	Filter located
6	Filter located in position 1
7-10	Horizontal positioning stepper motor pulses
11	Outer ring of filters positioned (carousel right)
12	Inner ring of filters positioned (carousel left)

Figure 12-2 is a schematic of the cable interface card. This card contains the circuitry to switch between computer control and manual control of the sample compartment stepper motors.

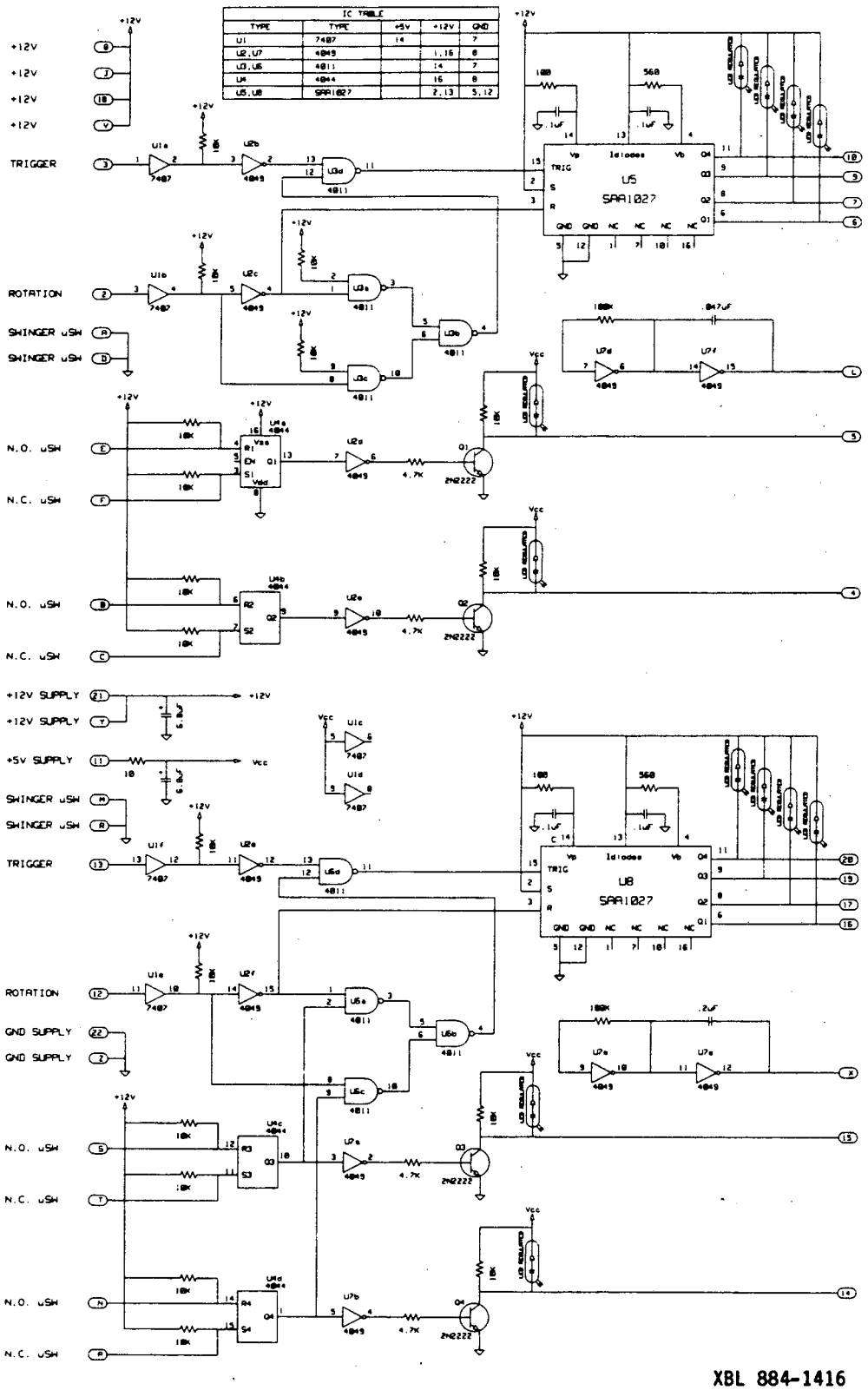

Figure 12-1 Stepper motor circuit board schematic.

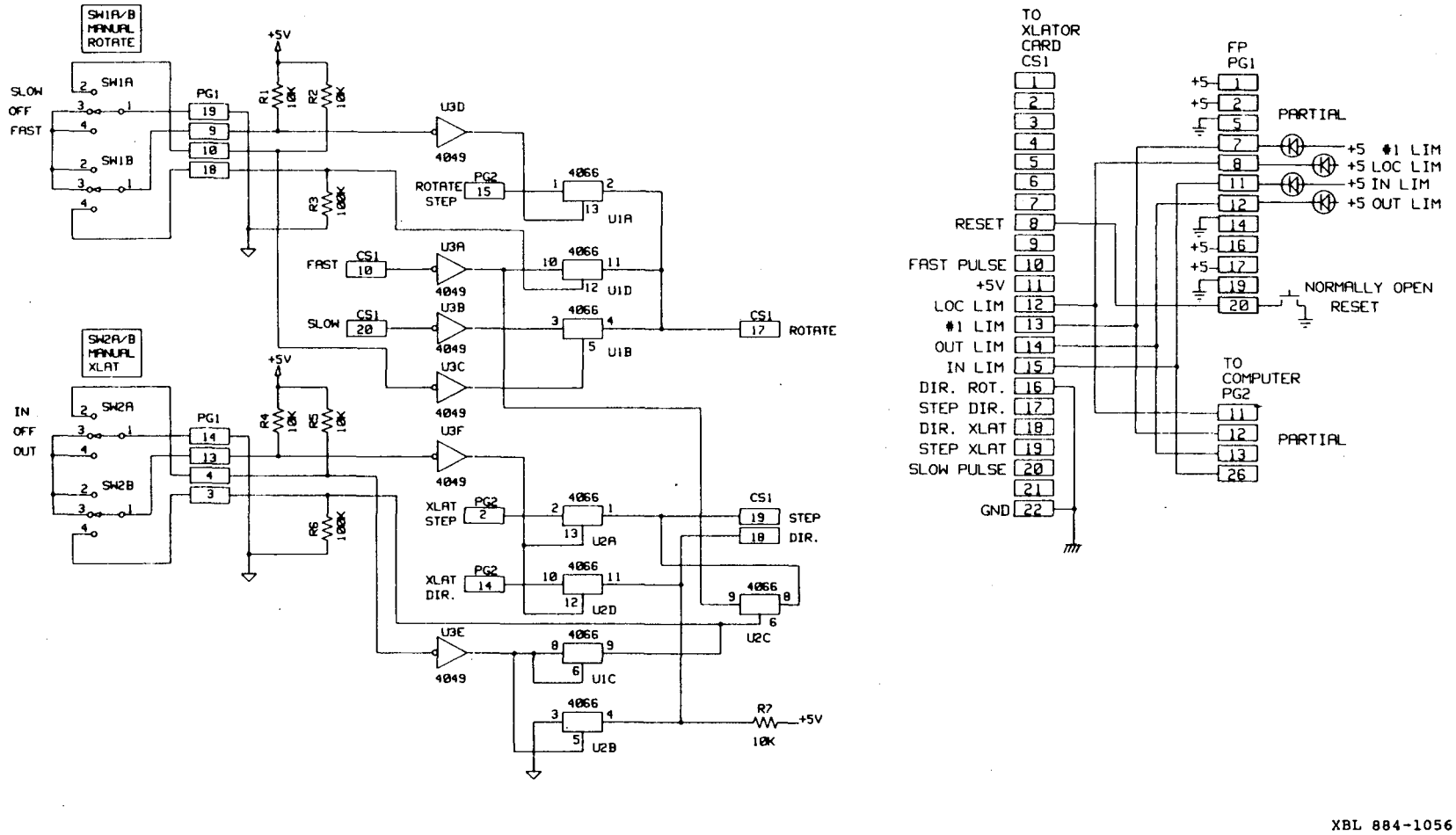

Figure 12-2 Cable interface card circuit schematic

SECTION 13

MAJOR COMPONENTS AND MANUALS

Andersen Samplers Incorporated
4215-C Wendell Drive
Atlanta, GA 30336
800-241-6698

1. 245-C Spare filter-holder carousel with cover
2. FH-240-P Filter holder, 37 mm., polypropylene

Uniphase
163 Bay Point Parkway
San Jose, CA 95134
408-434-1800

1. Model 1101P Helium-Neon Laser

Nicolet Analytical Instruments
5225-1 Verona Rd.
Madison, WI 53711
608-273-5004

1. 912A0039 5DXB mainframe
2. 840-201500 Ge on KBr substrate (400 - 4800 cm^{-1}) beam splitter
3. 840-106600 DTGS detector with KBr window
4. 843-101700 640 Kilobytes memory
5. 843-02430 SMD disk controller
6. 843-021700 36 Megabyte SMD plus single 1 Megabyte floppy disk
7. 540-1048 Superquant software
8. 470-113400 Sample focus mirror

9. 470-111600 Detector mirror

10. 840-107500 Flipper mirror

11. 400-118800 Source element

12. 840-108-000 Mercury Cadmium Telluride detector (400 - 6000 cm^{-1}) liquid nitrogen cooled

13. 015-718200 Flag alignment post

Plotter - HP 7470A* 2-pen graphics plotter with option 001 RS-232-C/CCITT V.24

Printer - Epson FX-85*dot matrix printer

TABLE 13-1

Manual list

1.	269-705706	1280 Schematics
2.		KB5151 Keyboard
3.		Uniphase Model 1300 Series Helium-Neon lasers
4.	269-706303	Nicolet OEM power supplies
5.		Nicolet FTIR instrument add-ons, upgrades and sampling accessories catalogue
6.	269-750101	TED NICOS Raster Editor
7.	269-746403	Quantitative analysis package
8.	269-754202	DX MENU GUIDE
9.	269-755801	Pre-installation information for 5MX, 5DX, 5SX, 20DXB, 20SX, 20SXB and ECO-DX
10.	269-721901	Theory of FTIR
11.	269-755801	Laser safety 5, 20DXB/SXB Optics & ECO-DX
12.	269-755900	Beam splitter alignment procedure
13.	269-757400	5DXB Fourier Transform Infrared Spectrometer
14.	269-7512-00	5DX spectrometer system - quick reference guide
15.	269-759000	Glossary NIC terms
16.		DXFTIR Programming Manual
17.	269-706002	NIC-forth 79 Programming Manual
18.	269-757000	NICOS Shell

Floppy Disks

1.	839-03500	Quantitative Analysis Package for version 4.56 software
2.		DXFTIR version 5.07 (2 disks)
	429-115203	a. Setup Disk
	429-115203	b. Program Disk
	429-11602	Spectral Search Program
	429-107207	Nicolet Operating System, Rev. 3.36

REFERENCES

Appel, B.R., Wall, S.M., Tokiwa, Y. and Haik, M., "Simultaneous nitric acid, particulate nitrate and acidity measurements in ambient air," Atmos. Environ., 14, 549-554 (1980).

Johnson, S. A., Kumar, R. and Cunningham, P.T., "Airborne detection of acidic sulfate aerosol using an ATR impactor," Aerosol Sci. Technol., 2, 401-405 (1983).

McClenny, W.A., Childers, J.W., Rohl, R. and Palmer, R.A., "FTIR transmission spectrometry for the non-destructive determination of ammonium and sulfate in ambient aerosols collected on Teflon* filters," Atmos. Environ., 19, 1891-1898 (1985).

Pollard, M.J. and Jaklevic, J.M., "Fourier transform infrared spectroscopy (FTIR) ammonium sulfate analysis on Teflon* air filters," in Proceedings of the 1986 EPA/APCA Symposium on Measurement of Toxic Air Pollutants, 865-874 (1986).

BIBLIOGRAPHY

Griffiths, P.R. and de Haseth, J.A., Fourier Transform Infrared Spectroscopy, John Wiley and Sons, New York, 1986.

Hirschfeld, T. and Kizer, K., "Direct Recording of Intermolecular Interaction Perturbation Spectra by Fourier Transform Spectroscopy," Appl. Spectrosc., 29, 345-351 (1975).

Hirschfeld, T., "Determination of Wavelength Scale Repeatabilities in Computerized Spectrometers," Appl. Spectrosc., 29, 524-525 (1975).

Hirschfeld, T., "Instrument Requirements for Absorbance Subtraction," Appl. Spectrosc., 30, 555-561 (1976).

Perkins, W.D., "Fourier Transform-Infrared Spectroscopy Part 1, Instrumentation, J. of Chem. Ed., 63, A5-A10 (1986).

LAWRENCE BERKELEY LABORATORY
TECHNICAL INFORMATION DEPARTMENT
UNIVERSITY OF CALIFORNIA
BERKELEY, CALIFORNIA 94720