Lawrence Berkeley National Laboratory
Recent Work

**Title**
PWM CONTROL OP SERVOMOTOR WITH LINEAR FEEDBACK

**Permalink**
https://escholarship.org/uc/item/1x698887

**Authors**
Denison, Craig A.
Owen, E.W.

**Publication Date**
1967-07-13

eScholarship.org Powered by the California Digital Library
University of California

UCRL-17617

cy. 2

# University of California

# Ernest O. Lawrence Radiation Laboratory

PWM CONTROL OF SERVOMOTOR WITH LINEAR FEEDBACK

Craig A. Denison and E. W. Owen

July 13, 1967

RECEIVED
LAWRENCE
RADIATION LABORATORY
SEP 1 1967
LIBRARY AND
DOCUMENTS SECTION

TWO-WEEK LOAN COPY

*This is a Library Circulating Copy which may be borrowed for two weeks. For a personal retention copy, call Tech. Info. Division, Ext. 5545*

Berkeley, California

UCRL-17617
cy. 2

## DISCLAIMER

This document was prepared as an account of work sponsored by the United States Government. While this document is believed to contain correct information, neither the United States Government nor any agency thereof, nor the Regents of the University of California, nor any of their employees, makes any warranty, express or implied, or assumes any legal responsibility for the accuracy, completeness, or usefulness of any information, apparatus, product, or process disclosed, or represents that its use would not infringe privately owned rights. Reference herein to any specific commercial product, process, or service by its trade name, trademark, manufacturer, or otherwise, does not necessarily constitute or imply its endorsement, recommendation, or favoring by the United States Government or any agency thereof, or the Regents of the University of California. The views and opinions of authors expressed herein do not necessarily state or reflect those of the United States Government or any agency thereof or the Regents of the University of California.

To be submitted to Asilomar Conference
On Circuits and Systems, Pacific Grove,
November 1-3, 1967

UCRL-17617
Preprint

UNIVERSITY OF CALIFORNIA
Lawrence Radiation Laboratory
Berkeley, California

AEC Contract No. W-7405-eng-48

# PWM CONTROL OF SERVOMOTOR WITH LINEAR FEEDBACK

Craig A. Denison and E. W. Owen

July 13, 1967

# PWM CONTROL OF SERVOMOTOR WITH LINEAR FEEDBACK*

CRAIG A. DENISON

Lawrence Radiation Laboratory
University of California
Berkeley, California

and

E. W. OWEN

Department of Electrical Engineering
University of California
Davis, California

## ABSTRACT

Because of the nonlinear nature of PWM-controlled systems, there has been little success in specifying the coefficients for linear feedback to achieve a given performance criterion. One approach has led to a controller that is unrealizable for certain initial conditions, and the response has ripple between the sample instants. The author of another paper has mentioned a method of approximating the time-optimal feedback with linear feedback, but the approximation is unsatisfactory for large initial conditions. This paper proposes another definition for a linear PWM controller which has, approximately, the minimum response time for a given initial condition, or which can guarantee that there is no overshoot for all initial conditions.

*Work done under auspices of the U. S. Atomic Energy Commission.

# I. INTRODUCTION

The subject of this paper is the design of a pulse-width-modulated (PWM) regulator-type controller for a servomotor plant. The feedback is linear, and the response is approximately time-optional. PWM systems have been analyzed by several authors,[1-4] but, since PWM control is nonlinear, it is not surprising that the analyses give no information about the relative stability of the system. Not much has been published on the synthesis of PWM systems for a specified performance. Two types of performance criteria that have been studied are minimal time[5-6] and zero error at the sample instants.[7,8] For the latter synthesis procedure, the controller is unrealizable for errors larger than those which can be reduced to zero in one sample period for a given servomotor input-pulse amplitude, and the response generally has ripple between the sample instants.

The time-optimal strategy for regulator-type control of PWM systems was initially presented by W. L. Nelson,[5] and further theoretical work was done by E. Polak.[6] The time-optimal control requires the solution of an implicit transcendental equation at each sample instant, or a nonlinear feedback that performs the same function. A simpler feedback is often desirable. Nelson, in his paper on time-optimal control,[5] mentions a way of approximating the time-optimal feedback with linear feedback. However, it was found[9] that Nelson's method gave approximately time-optimal response only for initial conditions near the origin; there was generally excessive overshoot for large initial conditions, and the manner of choosing the linear feedback coefficients appeared to have no rational basis.

This paper describes a more satisfactory linear feedback (and its rationale). An important concern in approximating the time-optimal feedback with linear feedback is how much performance is sacrificed because of the simpler feedback. Therefore, this matter is also discussed.

## Description of the PWM Controller

The PWM controller output u(t) is a sequence of rectangular pulses of duration $\tau$ and constant amplitude M. The sign $\xi$ of a given pulse is the same as that of the sampled input to the controller $\sigma(kT)$. The PWM controller is formally described by

$$u(t) \quad \begin{cases} M\xi & \text{for } kT \leq t < kT + \tau, \\ 0 & \text{for } kT + \tau \leq t < (k+1)T, \end{cases} \qquad \text{with } k = 0, 1, 2, \cdots, \tag{1}$$

where $T$ = sample period,

$\tau = T \text{ sat } |\sigma(kT)|$,

$\xi = \text{sgn } \sigma(kT)$,

$$\sigma(kT) = \langle \underline{a}, \underline{x}(kT) \rangle = a_1 x_1(kT) + a_2 x_2(kT),$$

$x_1$ = output variable, and

$x_2 = \frac{dx_1}{dt}$

## Description of the Plant

The plant is a second-order servomotor with the transfer function

$$G(s) = \frac{K}{s(s + \lambda)} . \tag{2}$$

It is convenient to describe the system with a minimum number of parameters. Therefore, the independent variable time is scaled by the transformation $t' = \lambda t$, so that the normalized plant becomes

$$G'(s) = \frac{K/\lambda^2}{s(s + 1)} ,$$

and the normalized sample period is $T' = \lambda T$. If the output of the controller is regarded to be $MK/\lambda^2$ instead of M, then the normalized plant is simply

$$G''(s) = \frac{1}{s(s + 1)} . \tag{3}$$

The quantity $MK/\lambda$ is identified as the maximum (steady-state) speed of the servomotor for a constant input M and is denoted by $V_M$, and so the normalized controller output amplitude is $M' = V_M/\lambda$. (The primes denoting the normalized parameters will be omitted in the remainder of the paper, since only the normalized system is discussed.)

## Statement of Design Objective and Rationale

A block diagram of the linear-feedback PWM control system is shown in Fig. 1. (Linear-feedback PWM control will be referred to as simply linear PWM control.) The objective is to define the feedback coefficients $a_1$ and $a_2$ in such a manner that the system's trajectory is very close to the time-optimal trajectory for a given initial condition. It is also shown that when the linear feedback coefficients are defined by a sufficiently large initial condition, the design procedure serves to give minimal response time for all larger initial conditions and sub-minimal, but monotonic, response for smaller initial conditions.

The rationale for choosing the feedback coefficients to satisfy this objective is based on certain properties of the time-optimal strategy. From these properties, a linear PWM controller is postulated which is a possible candidate for the "fastest" linear PWM

controller. However, it appears that it is unreasonable to make an exhaustive search for the fastest linear PWM controller, since a linear controller cannot be the fastest linear controller for more than a very few initial conditions. Otherwise the time-optimal feedback would be linear, and it is known that it is nonlinear. Instead, a close approximation to the fastest linear PWM controller is sought.

## II. FORMULATION OF THE LINEAR PWM CONTROL

It is asserted that the system's trajectory under the control of a "fast" linear PWM controller will necessarily have the following property:

> Property 1. The system's trajectory does not cross the continuous-relay-control switching line.

The support for this assertion is a property of the time-optimal strategy. Namely, the time-optimal control takes longer to bring a state to the origin when the state is just CW to the continuous-relay-switching line than when it is just CCW to the switching line (see Fig. 1 of Ref. 5). Therefore, a linear PWM controller could do no better in this regard.

It follows from Property 1 that the pulse width for the fast linear controller should satisfy

> Property 2. The accelerating-control pulse width is no greater, and the decelerating-control pulse width is no less, than the corresponding pulse widths for the time-optimal control.

Now, clearly, the fastest linear PWM controller would be one which has the least damping and the narrowest unsaturated control band and yet satisfies Property 2 along the trajectory.

The proposed linear PWM control band is shown in Fig. 2, and is specified in terms of only the sample period and a parameter, called $x_{2max}$, that is approximately the maximum speed of the trajectories of principal interest.

The region in which Property 2 is not satisfied (for the case of the sample period equal to $T = 0.2$ and $x_{2max} = 1.0$) is shown in Fig. 3. The cross-hatched region in Fig. 3 was determined (with a computer) by comparing the pulse width for the linear feedback with the pulse width for the time-optimal feedback. Figure 3 shows that the linear PWM controller pulse width would not be quite wide enough for a very narrow region on the CCW side of the switching line. Hence, if the trajectory were that close to the switching line, a sample occurring in the indicated area would cause the trajectory to cross the switching line. But

it was found experimentally that the trajectory did not approach that close to the switching line, except for some initial conditions when the sample period was T = 0.2.

The linear control band depicted in Fig. 2 is defined analytically by solving simultaneously the two equations for the linear control boundaries with the condition that the linear and time-optimal control boundaries intersect at $x_2 = x_{2max}$, the maximum trajectory speed. One of these intersection points, $\underline{x} = (x_1, x_{2max})$, is[9]

$$x_1 = \ln(x_{2max} + 1) - x_{2max},$$

and a second point, $\underline{x} = (x'_1, x_{2max})$, is

$$x'_1 = -2T - x_{2max} + \ln(x_{2max} - 1 + 2e^T).$$

The feedback coefficients are found to be

$$a_1 = \frac{-2}{\ln[(x_{2max} + 1)/(x_{2max} - 1 + 2e^T)] + 2T},$$

$$a_2 = -\tfrac{1}{2} a_1 \frac{[-2T - 2x_{2max} + \ln(x^2_{2max} + 2e^T x_{2max} + 2e^T - 1)]}{x_{2max}}. \tag{4}$$

The denormalized units of $a_1$ and $a_2$ are, respectively, $\lambda/V_M$ and $1/V_M$. For $x_{2max} = 1$, the feedback coefficients are simplified to

$$a_1 = -2/T,$$

$$a_2 = -\tfrac{1}{2} a_1(-2T - 2 + T \ln 4). \tag{5}$$

## III. EXPERIMENTAL RESULTS

The effect of the parameter $x_{2max}$ in Eq. (4) is to minimize the response time of the linear PWM-controlled system for certain initial conditions. Figure 2 shows that the linear feedback defined by $x_{2max} = 0.8$ brings the initial condition $x(0) = (-1, 0)$ very close to the time-optimal trajectory. Each point of the trajectory shown in Fig. 2 is the state at a sample instant or the end of a pulse. The terminal part of the trajectory for time-optimal control would be exactly on the switching line. Figure 4 shows the effect of increasing the value of $x_{2max}$ to 1.0 for the same initial condition, and Fig. 5 shows that the

new value of $x_{2max}$ is optimal for $\underline{x}(0) = (-1, 1)$, or any initial condition sufficiently large to allow the speed to reach the maximum steady-state value of 1.0.

A summary of response times is shown in Fig. 6 for four initial conditions and three values of $x_{2max}$. The response time is also shown for the time-optimal control. The trajectory for the time-optimal and the fastest linear PWM controller are very nearly identical except that the trajectory for the linear PWM controller approaches the origin asymptotically, in the same manner as a conventional continuous-feedback controlled system, and the time-optimal trajectory goes directly to the origin. Therefore, the relative differences in the response times for the time-optimal and linear controllers becomes greater for smaller target sizes. For the data shown in Fig. 6, the target was a circle (in the phase plane) of radius 0.001 normalized units.

The response time for the time-optimal and linear PWM controllers becomes less for smaller sample periods. Between the sample periods of 1.0 and 0.2, the difference in response times is about 50%, but between 0.2 and smaller sample periods, the difference is less than 10%.

## IV. CONCLUSIONS

Equation (4) specifies a set of linear feedback coefficients for the PWM control of any plant of the form given in Eq. (2). The response for the linear PWM controller is closest to the time-optimal one when the parameter $x_{2max}$ in Eq. (4) is close to the magnitude of the maximum speed for a given initial condition. The response has no overshoot, regardless of the initial condition, if the value of $x_{2max}$ is taken to be 1.0.

The time-optimal PWM controller is about twice as fast as the linear controller for the initial conditions studied. For larger initial conditions, the relative difference would be smaller. A more complete comparison of the two controllers would have to include the effect of the accuracy to which the time-optimal control can be implemented and the sensitivity of the performance to changes in the plant time constant.

It is expected that the approach presented here could be applied to the double integrating second-order plant, but higher-order plants and the nonintegrating second-order plant would be entirely different and more difficult problem.

## REFERENCES

[1] F. R. Delfeld and G. J. Murphy, "Analysis of Pulse-Width-Modulated Control Systems," IRE Trans. on Automatic Control, vol. AC-6, pp. 283-292, September 1961.

[2] R. E. Andeen, "Analysis of Pulse Duration Sampled-Data Systems with Linear Elements," IRE Trans. on Automatic Control, vol. AC-5, pp. 306-313, September 1960.

[3] W. L. Nelson, "Pulse-Width Relay Control in Sampling Systems," ASME Trans. (J. Basic Engin.), vol. 83, Series D, pp. 65-76, March 1961.

[4] G. J. Murphy and S. H. Wu, "A Stability Criterion for Pulse-Width-Modulated Feedback Control Systems," IEEE Trans. on Automatic Control, vol. AC-9, no. 4, pp. 434-441, October 1964.

[5] W. L. Nelson, "Optimal Control Methods for On-Off Sampling Systems," ASME Trans. (J. Basic Engin.), vol. 84, pp. 91-100, March 1962.

[6] E. Polak, "Minimum Time Control of Second Order Pulse-Width-Modulated Sampled-Data Systems," ASME Trans. (J. Basic Engin.), vol. 84, Series D, pp. 101-110, March 1962.

[7] T. Meksawan and G. J. Murphy, "Optimum Design of Linear Pulse-Width-Modulated Control Systems," in Proceedings of Allerton Conference on Circuit and System Theory, pp. 717-735, 1963.

[8] G. J. Murphy and T. Meksawan, "Optimal Synthesis of Linear Pulse-Width-Modulated Computer-Controlled Systems by Dynamic Programming," J. Franklin Inst., vol. 277, no. 2, pp. 128-139, February 1964.

[9] C. A. Denison, "Analysis and Design of a Pulse-Width-Modulated Control System," M. S. Thesis, University of California, Department of Electrical Engineering, Davis, March 1967.

## FIGURE CAPTIONS

Fig. 1. Block diagram of system.

Fig. 2. Definition of linear PWM controller.

Fig. 3. Regions not satisfying Property 2.

Fig. 4. Trajectory for $\underline{x}(0) = (-1, 0)$, $T = 0.1$, and $x_{2max} = 1.0$.

Fig. 5. Trajectory for $\underline{x}(0) = (-1, 1)$, $T = 0.1$, and $x_{2max} = 1.0$.

Fig. 6. Summary of response times.

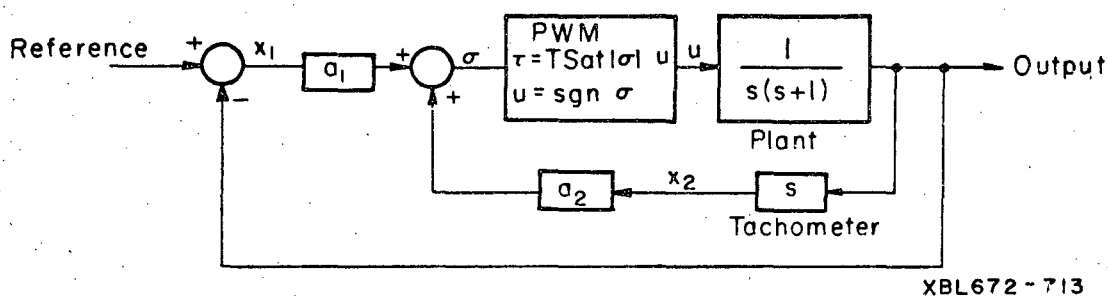
Reference
+
x1
−
a1
+
+
σ
PWM
τ = TSat|σ| u
u = sgn σ
u
1
s(s+1)
Plant
Output
a2
x2
s
Tachometer
XBL672-713

Fig. 1.

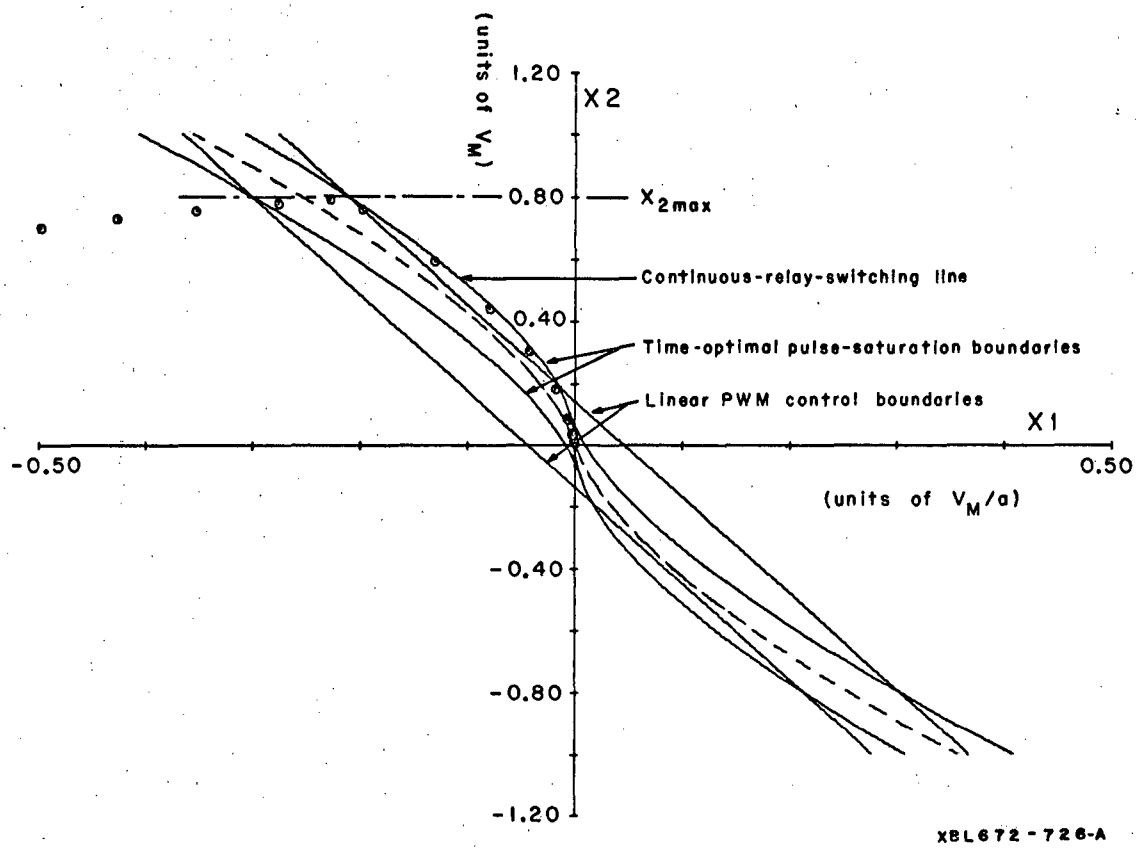
(units of $V_M$)
1.20
X2
0.80
$X_{2max}$
Continuous-relay-switching line
0.40
Time-optimal pulse-saturation boundaries
Linear PWM control boundaries
X1
-0.50
0.50
(units of $V_M/a$)
-0.40
-0.80
-1.20
XBL672-726-A

Fig. 2.

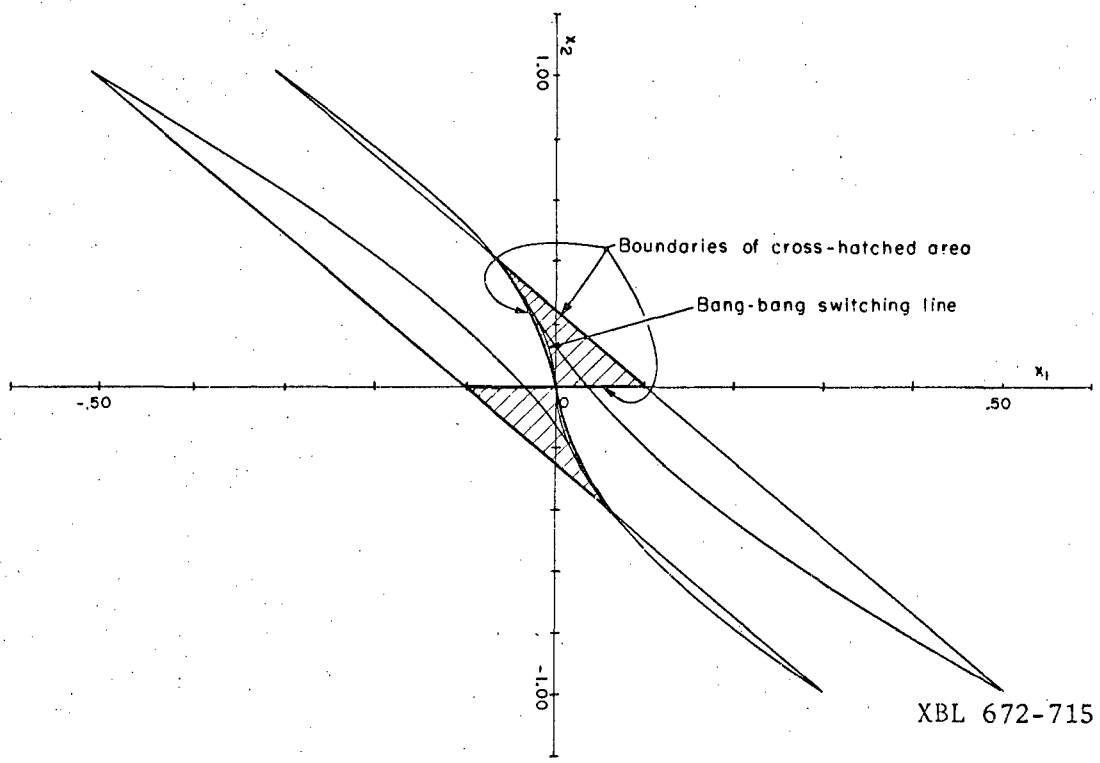
1.00
$x_2$
Boundaries of cross-hatched area
Bang-bang switching line
$x_1$
-.50
0
.50
-1.00
XBL 672-715

Fig. 3.

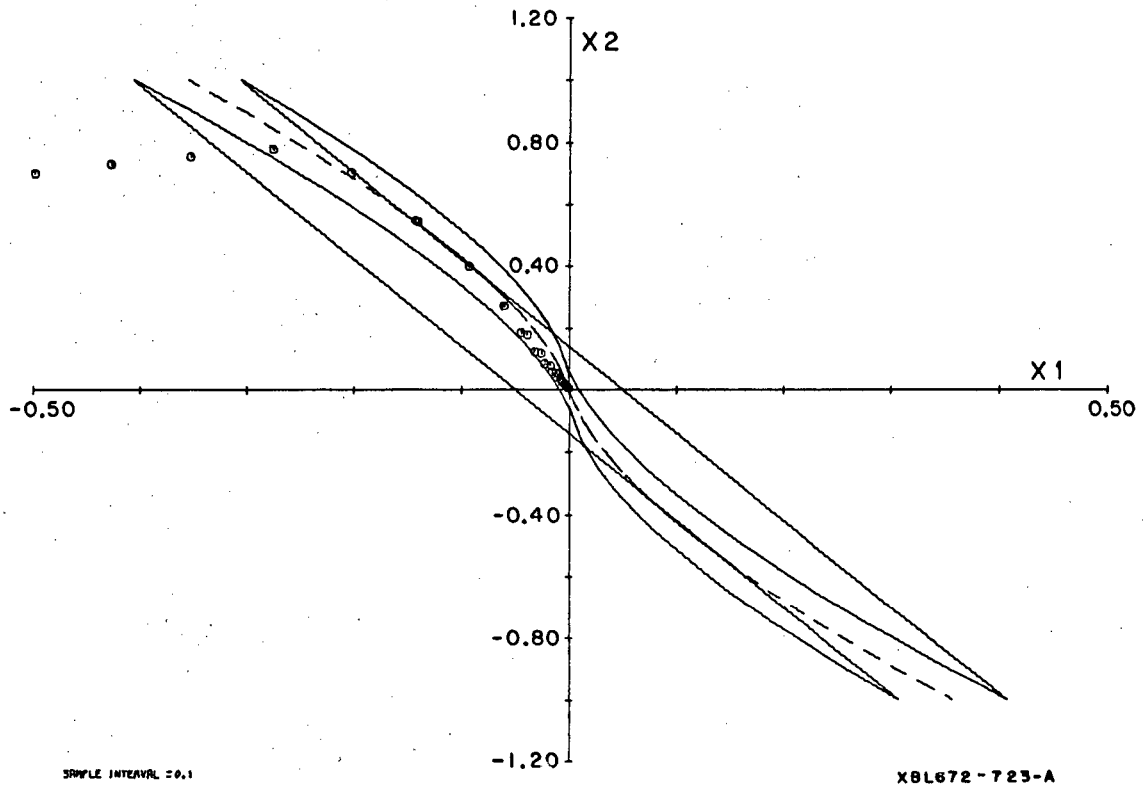
1.20
X2
0.80
0.40
X1
-0.50
0.50
-0.40
-0.80
-1.20
SAMPLE INTERVAL =0.1
XBL672-723-A

Fig. 4.

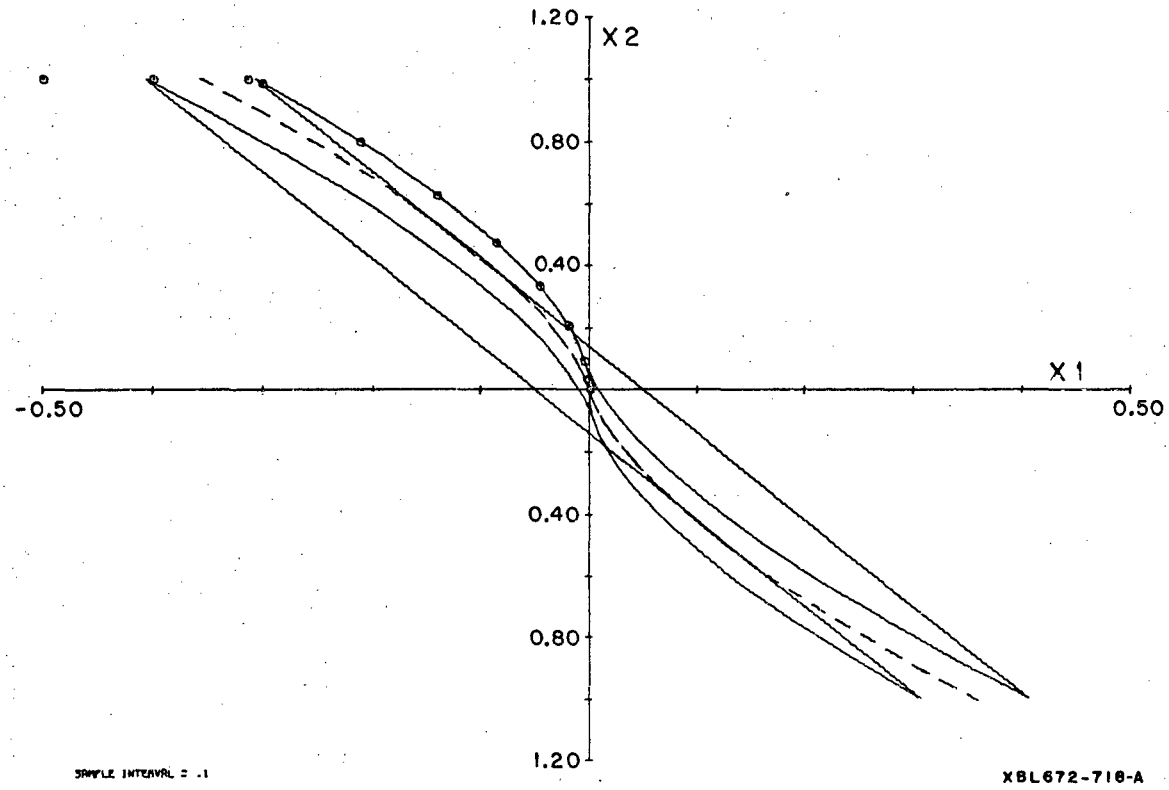
1.20
X2
0.80
0.40
X1
-0.50
0.50
0.40
0.80
1.20
SAMPLE INTERVAL = .1
XBL672-718-A

Fig. 5.

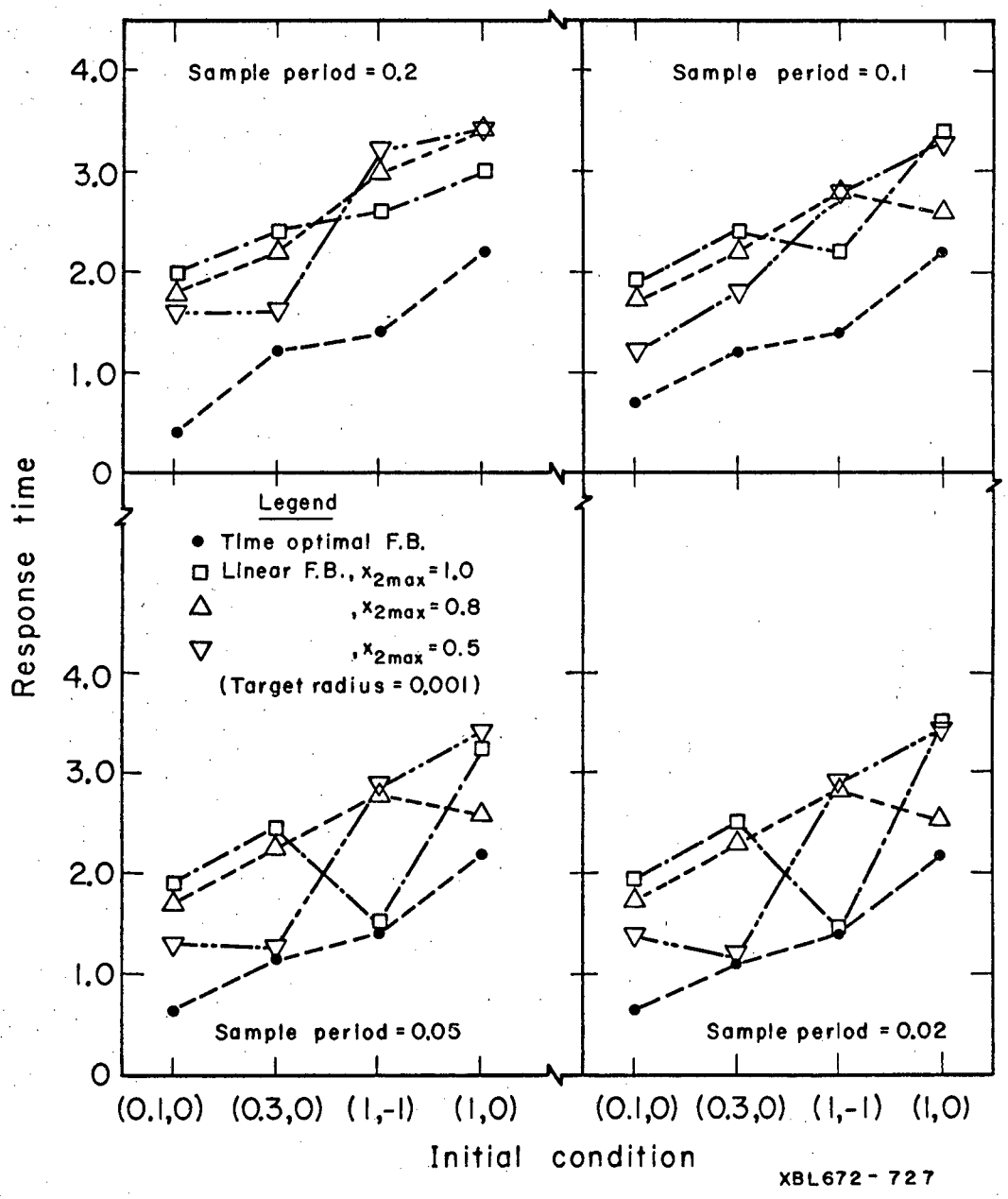
Sample period = 0.2
Sample period = 0.1
Sample period = 0.05
Sample period = 0.02
Legend
Time optimal F.B.
Linear F.B., $x_{2max}$ = 1.0
, $x_{2max}$ = 0.8
, $x_{2max}$ = 0.5
(Target radius = 0.001)
Response time
4.0
3.0
2.0
1.0
0
(0.1,0)
(0.3,0)
(1,-1)
(1,0)
Initial condition
XBL672-727

Fig. 6.

This report was prepared as an account of Government sponsored work. Neither the United States, nor the Commission, nor any person acting on behalf of the Commission:

A. Makes any warranty or representation, expressed or implied, with respect to the accuracy, completeness, or usefulness of the information contained in this report, or that the use of any information, apparatus, method, or process disclosed in this report may not infringe privately owned rights; or

B. Assumes any liabilities with respect to the use of, or for damages resulting from the use of any information, apparatus, method, or process disclosed in this report.

As used in the above, "person acting on behalf of the Commission" includes any employee or contractor of the Commission, or employee of such contractor, to the extent that such employee or contractor of the Commission, or employee of such contractor prepares, disseminates, or provides access to, any information pursuant to his employment or contract with the Commission, or his employment with such contractor.