**Title**
GAS ABSORPTION BY DROPS TRAVELLING ON A VERTICAL WIRE



**Authors**
Rajan, Shanti Mohan
Goren, Simon L.

**Publication Date**
1965-06-01

# University of California

# Ernest O. Lawrence Radiation Laboratory

GAS ABSORPTION BY DROPS TRAVELLING ON A VERTICAL WIRE



Berkeley, California

## DISCLAIMER

Submitted to American Institute
of Chemical Engineering Journal

UCRL-16047-Rev.

UNIVERSITY OF CALIFORNIA

Lawrence Radiation Laboratory
Berkeley, California

AEC Contract No. W-7405-eng-48

# GAS ABSORPTION BY DROPS TRAVELLING ON A VERTICAL WIRE

Shanti Mohan Rajan and Simon L. Goren

June 1965

# GAS ABSORPTION BY DROPS TRAVELLING ON A VERTICAL WIRE

Shanti Mohan Rajan and Simon L. Goren

Inorganic Materials Research Division, Lawrence Radiation Laboratory, and Department of Chemical Engineering, College of Chemistry, University of California, Berkeley, California

June 1965

## ABSTRACT

Measurements of the liquid side controlled absorption of $CO_2$ gas by a series of oil drops moving down a vertical wire are reported. The variables studied are drop frequency, oil viscosity, wire size, and column length. A model is proposed which assumes the gas is absorbed by the almost stagnant liquid film between and covering the drops, the film is subsequently mixed with a drop as it moves past, and the dissolved gas is carried out of the column in circulating loops of liquid within the drops. The model leads to an equation of the form $(P_s-P)/(P_s-P_i) = e^{-L^*}$ which correlates the data and gives a good approximation to the slope of the line.

## INTRODUCTION AND DESCRIPTION OF FLOW

In chemical engineering there are many processes which require the contact of a liquid with a gas. Such contact often results in transfer of heat or mass or a combination of both heat and mass. Gas absorption, distillation and stripping are examples of contact processes of wide industrial use and interest. Among systems of simple geometry, gas absorption by a liquid has been studied where the liquid is in the form of a jet, a thin film flowing on a wall, or drops falling through a gaseous phase. This paper will describe gas absorption by a liquid for a situation which at one and the same time combines features characteristic of each of these geometries.

This study is concerned with the liquid side controlled absorption of $CO_2$ gas by a series of white oil drops moving down a vertical wire. Adjacent drops are connected by a thin film and both the drops and film are axisymmetric about the wire. There is evidence that inside each drop, as viewed in a coordinate system moving with the drops, is a circulating loop of liquid roughly in the shape of a torus. Throughout this paper the word drop is used to mean the combination of the circulating torus with the region surrounding it forming the observed bulge or "drop". The term torus refers to the circulating loop only. To get a clearer picture of the flow one may examine Fig. 1 which gives the geometry of the flow and also defines the nomenclature used. In Fig. 2c a schematic representation of the streamlines for the flow (in a coordinate system moving with the drops) is drawn. It may further help the reader in visualizing the flow if, at this point, we give some typical dimensions. For the Number 7 white oil (density, $\rho = .87$ gm/cm$^3$; surface tension, $\sigma = 35$ dyne/cm; viscosity, $\mu = .57$ poise) flowing down a wire of diameter .079 cm with drop frequency

of 2 drops/sec, the volumetric flow rate is $9.3 \times 10^{-3}$ $cm^3$/sec. This value and the others to be cited depend on the size of the drop, which can be controlled by the geometry of the apparatus at the point of drop formation. The drops travel down the wire with a wave velocity of 1.9 cm/sec. The maximum drop diameter is .19 cm, the diameter of the film is .11 cm, the film thickness is $1.5 \times 10^{-2}$ cm, the drop length is .35 cm, and the wave length is .74 cm. The velocity at the free surface of the film connecting two drops was calculated by assuming a fully developed parabolic flow having the measured film thickness. It was found to be .17 cm/sec indicating that the liquid in the film moves much more slowly than the liquid in the circulating torus. The results of the measurements for the other flow conditions investigated are listed in Table II.

## APPARATUS AND PROCEDURE

Several different grades of white oil are available from Standard Oil Company of California, and in this study grades Nos. 7, 9, and 15 were used. The pertinent physical properties of the oils used are shown in Table I. The densities and surface tensions are catalogue values. The viscosities were measured in a Haake (Couette type) viscometer and were found to agree with the catalogue values. The saturation concentrations and diffusivities of $CO_2$ in the oils were measured by methods which will be described shortly.

The apparatus used to measure the absorption is shown in Fig. 3. It consists of a reservoir in which the oil to be tested is stored. The reservoir is connected to a 13-gauge syringe needle and the flow of oil is controlled by a needle valve. The exit end of the syringe needle was cut perpendicular to the needle axis and machined to a smooth surface. The needle enters the absorption chamber through a three holed rubber stopper at the top of the column. The other two holes on the stopper contain a gas outlet and a thermometer. The absorption chamber is 2.5 inch o.d., heavy wall glass tubing varying in lengths from 40 cm to 3 cm. At the bottom of the chamber is another three holed rubber stopper which contains a take-off tube in the middle flanked by the gas inlet and a tube leading to a manometer. The take-off tube is a 3-inch long, 1/4 inch i.d. plastic tube and is connected directly to a Van Slyke manometric gas analyzer. All connections in the apparatus are made with tygon tubing. A piano wire down which the drops of oil move is stretched taut through the syringe and take-off tube. A little adjustment is usually necessary to insure that the wire is vertical and centered at the syringe exit so that the oil drops form and move with angular

symmetry about the wire. Wires of 0.031 inch diameter and 0.020 inch diameter were used.

Dissolved gases were removed from the oils by heating the oils under vacuum. When a sample of oil is transferred from the vessel in which it was degassed to the reservoir of the absorption apparatus, the oil is exposed briefly to the air permitting some gas pickup. Precautions were taken to avoid trapping air bubbles in the oil.

Oil flows from the reservoir through the syringe needle onto the wire. The flow rate is maintained and controlled by a needle valve quite accurately. To insure negligible gas phase resistance to the transfer the oil is contacted with pure $CO_2$ gas. $CO_2$ was used because its high solubility facilitated concentration measurements. Carbon dioxide gas enters at the bottom of the absorption chamber. Before the gas enters the chamber it is bubbled through a column of the test oil. A very low flow rate of $CO_2$ gas through the absorption chamber is maintained to keep the partial pressure of carbon dioxide gas at 1 atmosphere. A constant level of oil was maintained in the take-off tube so that the column length for absorption was the same during the run. The oil was allowed to flow through the take-off section for at least one complete residence time before a sample was taken. After this period of time a sample is drawn into the Van Slyke apparatus for analysis.

The Van Slyke manometric apparatus is an analytic device that works on a simple principle. A sample of the liquid is taken into a chamber. A vacuum is created in the chamber by controlling the level of a mercury reservoir. At the lower pressure in the chamber gases which dissolved in the liquid sample are boiled off. After boiling, the gas is compressed to a known volume. The pressure of this

compressed volume of gas is read on a connecting manometer. Knowing the pressure, volume, temperature and the sample size one can easily calculate the concentration of the dissolved gases in the liquid with the aid of the ideal gas law. $CO_2$ can be considered an ideal gas since the pressure is low (1 atm) and the temperature is 25°C. Even if the vapor pressures of the oils are significant they introduce no error because they are subtracted out when differences are taken. Concentrations are reported here as the pressure in centimeters of mercury of the $CO_2$ gas boiled off from a 1.9 cc (a calibrated volume on the Van Slyke) sample of liquid when the gas is compressed to a volume at 1.9 cc at 25°C.

The amount of $CO_2$ absorbed was measured for each oil flowing down the 0.031 inch diameter wire for a series of lengths and flow rates. Absorption into the No. 15 oil flowing down the 0.020 inch diameter wire was also measured. Two separate samples were analyzed for each run. If the measured concentrations agreed to within 5%, the average value of the two readings was used as the concentration. If the two values did not agree within 5%, a third sample was analyzed.

The frequency of the drops was measured by counting the number of drops flowing past a fixed point in a given time period. The flow rate was measured by collecting the oil, at a given drop frequency, in a graduated cylinder for a known period of time. The wave velocity was measured by timing a drop travelling a known length of column. Three measured values were averaged for each flow condition.

The saturation concentration of $CO_2$ in the No. 7 oil was measured by bubbling $CO_2$ in the oil for several hours and analyzing the sample in the Van Slyke apparatus. A mass transfer run with the 30 cm column indicated that over 95% of saturation was achieved. A run with the

40 cm column reproduced the saturation value to within 1%. Hence mass transfer runs with the 40 cm columns were used to measure saturation concentrations of $CO_2$ in all three oils. The drop frequency was approximately 1 drop/4 sec.

The only known data on diffusivity in white oils are those published by Reamer, Duffy and Sage[1] and Reamer and Sage[2] who have worked at elevated pressures. An extrapolation can be made for atmospheric pressure, but only at the risk of a large error. After several methods of absolute diffusivity measurements were investigated, the following was adopted. A 10 cc sample of the oil saturated with $CO_2$ was injected into a special cell under an atmosphere of $CO_2$. The cell is 9.5 cm in diameter and 5 cm in height. The bottom is an optically flat surface. Openings into the cell for titration, gas entrance and exit are provided at the top surface. The cell was floated on a concentrated cellulose-water solution. This thick, visco-elastic liquid appeared to be very effective in damping out room vibrations. Because the oils were viscous and the layers were thin and because the gas above the layer of oil was stagnant convective currents in the oil layer are thought to be minimized. After the oil had spread out into a thin film (approximately 0.15 cm thick) the $CO_2$ above the oil was evacuated by pulling a slight vacuum for 1 minute. The $CO_2$ in the oil was then allowed to desorb into air for 30 minutes. At the end of this time period a slight vacuum was again pulled for 1 minute in order to evacuate the desorbed $CO_2$. Next a known volume of .00492M $Ba(OH)_2$ solution was added to the cell and the oil and caustic mixture vigorously shaken. The excess $Ba(OH)_2$ was titrated to the phenylphthalien end point with 0.01 M HCl. In order to check the initial concentration the same procedure was followed except for the 30 min desorption period.

The diffusivity was then calculated from the analytical solution for the transfer from an initially uniform slab when the surface condition is suddenly changed.[3] There was very good reproducibility in the case of the 7 and 15 oil but the reproducibility was unaccountably very poor for the No. 9 oil. The calculated values of the diffusivities are:

No. 7 oil---56cp--$3.9 \times 10^{-6}$ $cm^2/sec$ (average of 3 runs)

No. 9 oil---72cp--$1.7 \times 10^{-6}$ $cm^2/sec$ (average of 6 runs)

No.15 oil---135cp--$2.4 \times 10^{-6}$ $cm^2/sec$ (average of 3 runs)

The diffusivity is unexpectedly low for the No. 9 oil. This has been attributed to the difficulty in the reproduction of the value, which varied from a low value of $.65 \times 10^{-6}$ $cm^2/sec$ to a high value of $2.8 \times 10^{-6}$ $cm^2/sec$. The diffusivities were plotted as a function of viscosity on log-log paper. A straight line was drawn connecting the Nos. 7 and 15 oil values. The diffusivity value for the No. 9 oil was obtained by interpolation. The value obtained was $3.3 \times 10^{-6}$ $cm^2/sec$ and this value has been used in all calculations. It is interesting to note that the extrapolation from Sage and Reamer predicts a value of $1.5\text{-}3.0 \times 10^{-6}$ $cm^2/sec$ for the $CO_2$-white oil (56 cp) system depending on how the curves are read.

Photographs of the drops for each flow condition were taken. A Linhof 4X5 camera with f-8, 1/400 sec settings and with ASA 400 speed sheet films were used. Measurements of the dimensions shown on Fig. 1 were made from the negatives on a Vanguard Motion Analyzer.

## THEORETICAL MODEL

### A. Fluid Mechanics

Before proposing a model for the mass transfer one should first understand the fluid mechanics of the system. Based on the external geometry of the drop and observations of the motion of small carbon black particles introduced into the oil, a fairly clear picture of the flow pattern emerges. Three conjectured streamline patterns are shown in Fig. 2. To reduce the patterns to those for equivalent systems in steady state the streamlines are drawn in a coordinate system moving with the wave velocity.

For the noncirculating flow represented in Fig. 2a all carbon black particles in the oil would move upstream relative to the drop. For flow with a double circulating loop, as represented in Fig. 2b, particles outside the loops would move upstream relative to the drop while those within the circulating loops would travel down the wire with the drop (i.e. with the wave velocity). Of those particles moving with the drop, the particles caught in the circulating loop farther from the wire would circulate counter-clockwise, as viewed in the drawing, while those caught in the loop nearer the wire would circulate clockwise. For the flow with a single circulating loop as represented in Fig. 2c, again those particles outside the circulating loop would move upstream relative to the drop while those within the loop would travel down the wire with the wave velocity. As drawn in the figure these later particles would rotate in the clockwise direction. It is also possible to imagine a flow with a single counter-clockwise circulating loop but this is physically less likely because then the region of highest liquid velocity would be on the side of the loop nearer the wire.

When carbon black particles were introduced into the flow some of the particles were observed to move upstream relative to the drop while others moved down the wire with the drop circulating in a clockwise direction (as viewed in the drawing). No counter-clockwise circulation was observed. Since the counter-clockwise circulating loop of Fig. 2b is closer to the outer surface of the drop, particles would have to circulate counter-clockwise when they are introduced near the surface. Several introductions near the surface resulted in only clockwise circulation of particles. It is therefore concluded that in a coordinate system moving with the wave velocity, the drops have a single circulating loop and the circulation is clockwise, as viewed in the drawing. The circulating fluid forms well defined tori which move down the wire with the wave velocity and retain their identity for long distances.

Carbon black particles in the film between drops or near the surface of a drop were observed to move much more slowly than the wave velocity, i.e. the velocity of the bulge and particles undergoing circulation. This qualitative observation is given some quantitative support by calculating the velocity of the free surface of the film under the assumption of fully developed parabolic flow having the (photographically) measured film thickness. The surface velocity, $u_s$, is given by the formula

$$u_s = \frac{\rho g \delta^2}{2\mu} \quad .$$

This calculation showed that the maximum velocity in the film is on the order of a tenth of the measured wave velocity (see Table II). One should also note that the thickness of the drop, as measured by (H-s), is larger than the film thickness by about a factor of four. These two observations, the smallness of the velocity in the film and the thinness of the film, indicate that the bulk of the liquid is carried down the

wire in the drops as circulating tori and the film between drops can be regarded as essentially stagnant.

## B. Mass Transfer

A model for mass transfer is presented that takes into consideration both the film between and covering the drops and the circulating tori. Consider the following equation which defines the concentration of gas in the oil being carried out of the absorption chamber, $P_{out}$:

$$P_{out} = \frac{q_F P_F + q_T P_T}{q_F + q_T} \tag{1}$$

where $q_F$ is the volumetric flow rate of the film (liquid exclusive of the tori), $q_T$ is the volumetric flow rate of the tori, $P_F$ is the mixed cup solute concentration in the film at outlet, and $P_T$ is the mixed cup solute concentration in the tori at outlet. Because the film drains very slowly and is very thin the measured flow rate is mainly that due to the circulating tori. In other words, $q_F \ll q_T$. Consequently one might also expect that $q_F P_F \ll q_T P_T$, at least for moderate contact times. Equation (1) then becomes

$$P_{out} \approx P_T \ . \tag{2}$$

It is therefore necessary to concentrate mainly on the circulating tori. The model proposed below is an extreme case, assuming complete "mixing" within a drop except for the region immediately adjacent to the drop surface. The extent to which the drop can be considered completely mixed is difficult to assess and will be discussed shortly.

In a coordinate system moving with the drop the volumetric flow rate Q, into and out of the drop is

$$Q = \pi\left[(s+\delta)^2 - s^2\right] U = 2\pi s\delta\left(1+\frac{\delta}{2s}\right) U \tag{3}$$

When carbon black particles were introduced into the flow some of the particles were observed to move upstream relative to the drop while others moved down the wire with the drop circulating in a clockwise direction (as viewed in the drawing). No counter-clockwise circulation was observed. Since the counter-clockwise circulating loop of Fig. 2b is closer to the outer surface of the drop, particles would have to circulate counter-clockwise when they are introduced near the surface. Several introductions near the surface resulted in only clockwise circulation of particles. It is therefore concluded that in a coordinate system moving with the wave velocity, the drops have a single circulating loop and the circulation is clockwise, as viewed in the drawing. The circulating fluid forms well defined tori which move down the wire with the wave velocity and retain their identity for long distances.

Carbon black particles in the film between drops or near the surface of a drop were observed to move much more slowly than the wave velocity, i.e. the velocity of the bulge and particles undergoing circulation. This qualitative observation is given some quantitative support by calculating the velocity of the free surface of the film under the assumption of fully developed parabolic flow having the (photographically) measured film thickness. The surface velocity, $u_s$, is given by the formula

$$u_s = \frac{\rho g \delta^2}{2\mu} \quad .$$

This calculation showed that the maximum velocity in the film is on the order of a tenth of the measured wave velocity (see Table II). One should also note that the thickness of the drop, as measured by (H-s), is larger than the film thickness by about a factor of four. These two observations, the smallness of the velocity in the film and the thinness of the film, indicate that the bulk of the liquid is carried down the

wire in the drops as circulating tori and the film between drops can be regarded as essentially stagnant.

## B. Mass Transfer

A model for mass transfer is presented that takes into consideration both the film between and covering the drops and the circulating tori. Consider the following equation which defines the concentration of gas in the oil being carried out of the absorption chamber, $P_{out}$:

$$P_{out} = \frac{q_F P_F + q_T P_T}{q_F + q_T} \tag{1}$$

where $q_F$ is the volumetric flow rate of the film (liquid exclusive of the tori), $q_T$ is the volumetric flow rate of the tori, $P_F$ is the mixed cup solute concentration in the film at outlet, and $P_T$ is the mixed cup solute concentration in the tori at outlet. Because the film drains very slowly and is very thin the measured flow rate is mainly that due to the circulating tori. In other words, $q_F \ll q_T$. Consequently one might also expect that $q_F P_F \ll q_T P_T$, at least for moderate contact times. Equation (1) then becomes

$$P_{out} \approx P_T \ . \tag{2}$$

It is therefore necessary to concentrate mainly on the circulating tori. The model proposed below is an extreme case, assuming complete "mixing" within a drop except for the region immediately adjacent to the drop surface. The extent to which the drop can be considered completely mixed is difficult to assess and will be discussed shortly.

In a coordinate system moving with the drop the volumetric flow rate Q, into and out of the drop is

$$Q = \pi\left[(s+\delta)^2 - s^2\right] U = 2\pi s\delta\left(1+ \frac{\delta}{2s}\right) U \tag{3}$$

where s is the wire radius, $\delta$ is the film thickness, and U is the wave velocity. Inherent in this equation is the assumption that the film is essentially stagnant. If the film becomes saturated before a drop reaches it, a mass balance on the well mixed drop gives

$$\frac{dPV}{d\Theta} = Q(P_s - P) = -V \frac{d}{d\Theta}(P_s - P) \tag{4}$$

where P is the concentration of the solute in the drop, $P_s$ is the saturation concentration of the solute, $\Theta$ is the contact time of drop, and V is the volume of the drop. Here any gas absorbed through the surface of the drop is counted as being part of the film from the preceeding drop. With the boundary condition

$$\text{at} \quad \Theta = 0, \; P = P_i \tag{5}$$

Eq. (4) can be integrated to yield

$$\frac{P_s - P}{P_s - P_i} = \exp\left[-Q\Theta/V\right] . \tag{6}$$

The contact time of the drop, $\Theta$, is the ratio of the column length, L, to the drop velocity, U. Substitution of this relation and Eq. (3) into Eq. (6) results in the following:

$$\frac{P_s - P}{P_s - P_i} = \exp\left[-\frac{2\pi s\delta}{V}\left(1 + \frac{\delta}{2s}\right) L\right] . \tag{7}$$

Two important questions arise in this model. (1) Does the film become saturated? (2) Is the drop well mixed?

(1) Does the film become saturated between the passage of successive drops? The criterion for determining whether or not a film is saturated with the solute is given by determining the value of $\frac{\mathcal{D}t}{\delta^2}$ where $\mathcal{D}$ is the molecular diffusivity, t is the exposure time between successive drops and $\delta$ is the film thickness. If the value of the group is greater than unity, then the film is essentially saturated. The extreme values for

the above quantities in this study are:

$$\mathcal{D} = 3.9\text{X}10^{-6}\ \text{cm}^2/\text{sec}$$

$$t = \frac{\lambda}{U} = \frac{3.5}{1.5}\ \text{sec} = 2.3\ \text{sec}$$

$$\delta = 1.5\text{X}10^{-2}\ \text{cm}$$

With the above values, $\frac{\mathcal{D}\lambda}{U\delta^2} \approx 6\text{X}10^{-2}$. This is far below the required value of unity for saturation. This implies that the film is far from saturation and in fact penetration theory seems applicable.

Since the film is not saturated the differential equation describing the mass balance becomes

$$\frac{dPV}{d\Theta} = Q(P'-P) \tag{8}$$

where P' represents the average solute concentration in the film before entering the drop and is expected to be given by an equation of the form

$$\frac{P_s-P'}{P_s-P} \approx f\left(\frac{\mathcal{D}\lambda}{U\delta^2}\right) = \beta\ . \tag{9}$$

Equation (8) now becomes

$$-V\frac{d(P_s-P)}{d\Theta} = Q[(P_s-P)-(P_s-P')] = Q(1-\beta)(P_s-P) \tag{10}$$

which when integrated with the same boundary condition as before gives

$$\frac{P_s-P}{P_s-P_i} = \exp\ [-Q(1-\beta)\Theta/V]\ . \tag{11}$$

Since the film is essentially stagnant and penetration theory is applicable the exact form of $\beta$ can be determined easily. The well known result is[4]

$$(1-\beta) = \left(\frac{4\mathcal{D}t}{\pi\delta^2}\right)^{1/2} = \left(\frac{4\mathcal{D}\lambda}{\pi\delta^2 U}\right)^{1/2}\ . \tag{12}$$

This should be corrected by a factor, A, which accounts for the greater area of that part of the film which surrounds the drop. Treating the

drop as an ellipsoid of revolution having major diameter $D_L$ and minor diameter 2H gives the correction.

$$A = \frac{2\pi h(\lambda - D_L) + 2\pi H^2 + \pi H D_L \dfrac{\sin^{-1} e}{e}}{2\pi h \lambda} \tag{13}$$

where $e = \sqrt{1-(2H/D_L)^2}$ . This leads to corrections between 5 and 30% depending on the drop frequency. For the volume of the mixed part of the drop, V, we have taken q/n (see the discussion). The wave velocity, U, is related to the wavelength, $\lambda$, and the drop frequency, n, by $U = n\lambda$. When these results and Eq. (3) are substituted into Eq. (11) we obtain upon simplification

$$\frac{P_s - P}{P_s - P_i} = \exp\left[ - \frac{2\pi s}{(q/n)} \left(1 + \frac{\delta}{2s}\right) A \left(\frac{4\mathcal{D}}{\pi n}\right)^{1/2} L \right] = e^{-L^*} . \tag{14}$$

(2) Is the drop well mixed? Although good circulation is observed inside the drops it is difficult to judge whether the drops can be considered well mixed. The flow is certainly laminar, and by mixing we do not mean the drop to be turbulent or stirred or even of uniform concentration; rather, the drop is a region of intensified diffusion. Estimates, after the method of Kronig and Brink,[5] of the time characteristic of circulation show it to be very much less than a time characteristic of molecular diffusion. Thus the streamlines within the torus should also be lines of constant concentration. Because it is probable that the streamlines are compressed on the side of the torus near the wire it is probable that there will be large concentration gradients there accompanied by rapid diffusion. On the other hand, the expansion of the streamlines on the side of the torus far from the wire will facilitate transfer into the torus from the film. When a drop must fall through several drop lengths before occupying the position of the preceding drop mixing

(as we understand it) is facilitated so that the assumption should be best at low drop frequencies.

## EXPERIMENTAL RESULTS AND DISCUSSION

The results of the flow and photographic measurements are listed in Table II. Typical dimensions have been cited already. The accuracy of all measurements is about 10% except for the drop length, $D_L$, which is somewhat less accurate because the gradual merging of the drop with the film made it difficult to pick off a unique length. For a given oil and wire (and entrance geometry) only the wave length and volumetric flow rate varied significantly with the drop frequency. The wave velocity, the torus volume, and the other geometrical factors were very nearly independent of drop frequency. In addition, for the .031 inch diameter wire, the geometry of the drop itself was roughly the same for all three oils. The wave velocity decreased as the viscosity increased, and it was observed that the dimensionless group $\mu U/\sigma$ was a constant having the value .031. One should note that the product $n\lambda$ was not precisely equal to U as was assumed above, the deviation being within 15% for all except two cases.

The results of the mass transfer experiments are listed in Table III. Remember that the concentrations are reported in terms of the pressure of the gas boiled off from a 1.9 cc sample when that gas is compressed to 1.9 cc at 25°C. The reproducibility of the runs was generally about 5%, but it was somewhat poorer at the lower flow rates.

The data for each flow condition was plotted as $(1-P/P_s)$ versus column length. A typical plot, for No. 7 oil on the .031 inch wire at a drop frequency of 2 drops/sec, is shown in Fig. 4. This method of plotting gave decent straight lines and when extrapolated to zero column length indicated end effects ranging from 20 to 60% of saturation. The tendency was for the end effect to increase as the drop frequency decreased, i.e. as the time of formation increased. To suppress the

end effects the data were replotted as $\frac{P_s - P}{P_s - P_i}$ vs L where P and $P_i$ are the measured concentrations for two column lengths differing by the amount L. This method of plotting also gave straight lines having the same slope as before but with somewhat greater scatter and now passing through $\frac{P_s - P}{P_s - P_i} = 1$ at L = 0. See Fig. 4. The data for all flow conditions studied was then plotted as $\frac{P_s - P}{P_s - P_i}$ vs L* where L* is the dimensionless column length suggested by the model:

$$L^* = \frac{2\pi s}{(q/n)} \left(1 + \frac{\delta}{2s}\right) A \left(\frac{4D}{\pi n}\right)^{1/2} L \ .$$

This is shown in Fig. 5.

The model does an adequate job in coalescing the data and in predicting the slope of the line. In coming to this conclusion one should keep in mind the large tolerance on the ordinate permitted by the 5% accuracy of the concentration measurements. The permissable error is shown in Fig. 5 by vertical lines for several arbitrarily chosen points. Although the correlations for most flow conditions individually are somewhat better than the overall correlation presented in Fig. 5, there is no significant trend with changing flow rate, oil viscosity or wire size not already taken into account. The consensus of the data is that the model underestimates the column length required for a given amount of transfer by about 30%. This may be partially due to underestimating the drop (mixing) volume by using the torus volume. Estimation of the drop volume from the photographic measurements is difficult owing to the uncertainty in $D_L$. Graphical integration of the measured shapes gave volumes about 20% larger than q/n. However it is likely that not all of the drop volume, and especially the liquid adjacent to the wire and the free surface, is effectively mixed. There

is also a practical advantage in using q/n. In this way everything needed in the final equation can be determined by flow measurements alone, except for two minor corrections.

The value of the model proposed here can be judged by comparing it with the data and with alternative reasonable models. We have just seen that the proposed model correlates the data and predicts the right magnitude of column length for a given amount of gas absorption. Other models were considered. These included treating the drops as unconnected volumes with the absorption given the equation developed by Kronig and Brink[5] for circulating drops, and treating the system as unrippled flow down a vertical wall (with volumetric flow rate q and wall perimeter $2\pi s$) as discussed by Emmert and Pigford.[6] These models all predicted column lengths more than an order of magnitude larger than the observed column length. Thus, although the proposed model is admittedly crude and many refinements might be suggested, it seems to properly account for the essential features of the mass transfer process.

Table I. Physical properties of the oils at 25°C

| Symbol | Property | No.7 | No.9 | No.15 |
|---|---|---|---|---|
| $\rho$ | Density, $gm/cm^3$ (A) | 0.870 | 0.878 | 0.868 |
| $\sigma$ | Surface tension, dyne/cm (A) | 35 | 36 | 36 |
| $\mu$ | Viscosity, poise (B) | 0.566 | 0.716 | 1.34 |
| $P_s$ | $CO_2$ saturation concentration $cm^2Hg/1.9\ cm^3$ (C) | 60.57 | 60.54 | 61.94 |
| $\mathcal{D}$ | Diffusivity of $CO_2$ $\frac{cm^2}{sec} \times 10^6$ (D) | 3.9 | 3.3 (E) | 2.4 |

(A) Catalogue value

(B) Measured in Haake viscometer

(C) Measured in Van Slyke apparatus, in equilibrium with $CO_2$ at 1 atm. pressure

(D) Measured in diffusion cell

(E) Interpolated value from measured diffusivities of No. 7 and No. 15 oils

Table II. Calculated and measured results from photographic and flow measurements

| | No. 7 oil, 0.031 inch wire | | | No. 9 oil, 0.031 inch wire | | |
|---|---|---|---|---|---|---|
| n→ | 1 drop/sec | 2 drops/sec | 3 drops/sec | 1 drop/sec | 2 drops/sec | 2.5 drops/sec |
| $q \times 10^3$ $cm^3/sec$ | 5.6 | 9.3 | 14. | 5.3 | 9.6 | 13. |
| U cm/sec | 2.0 | 1.9 | 1.9 | 1.5 | 1.6 | 1.7 |
| $u_s$ cm/sec | .16 | .17 | .25 | .29 | .22 | .15 |
| $V \times 10^3$ $cm^3$ | 5.6 | 4.7 | 4.8 | 5.3 | 4.8 | 5.0 |
| 2s cm | .079 | .079 | .079 | .079 | .079 | .079 |
| 2H cm | .21 | .19 | .19 | .19 | .21 | .21 |
| 2h cm | .11 | .11 | .12 | .12 | .12 | .11 |
| $\delta$ cm | .015 | .015 | .018 | .022 | .019 | .016 |
| $\lambda$ cm | 2.0 | .74 | .52 | 1.7 | .80 | .63 |
| $D_L$ cm | .35 | .35 | .34 | .41 | .39 | .37 |

Table II. (Continued)

| | No. 15 oil, 0.031 inch wire | | | | No. 15 oil, 0.020 inch wire | |
|---|---|---|---|---|---|---|
| n→ | 1 drop/ 6 sec | 1 drop/ 4 sec | 1 drop/ 2 sec | 1 drop/ sec | 1 drop/ 2 sec | 1 drop/ sec |
| $q \times 10^3$ $cm^3/sec$ | 1.1 | 1.7 | 2.7 | 5.0 | 6.1 | 12. |
| U cm/sec | .67 | .79 | .88 | .85 | 1.9 | 2.5 |
| $u_s$ cm/sec | .051 | .11 | .10 | .066 | .047 | .19 |
| $V \times 10^3$ $cm^3$ | 6.5 | 6.7 | 5.3 | 5.0 | 1.2 | 1.2 |
| 2s cm | .079 | .079 | .079 | .079 | .051 | .051 |
| 2H cm | .19 | .20 | .21 | .19 | .23 | .26 |
| 2h cm | .10 | .12 | .11 | .11 | .075 | .099 |
| cm | .013 | .018 | .018 | .014 | .012 | .024 |
| $\lambda$ cm | 3.7 | 3.0 | 1.7 | .61 | 3.4 | 2.6 |
| $D_L$ cm | .33 | .34 | .36 | .31 | .36 | .43 |

Table III. Mass Transfer Data

a. No. 7 oil, 0.031 inch wire; $P_s$ = 60.57

| L(cm) | 1 drop/ sec P(cm) | 2 drops/ sec P (cm) | 3 drops/ sec P(cm) |
|---|---|---|---|
| 16.0 | 52.30 | 49.84 | 45.15 |
| 10.5 | 48.91 | 46.09 | 40.82 |
| 6.0 | 43.25 | 38.66 | 32.59 |
| 3.0 | 32.29 | 31.67 | 25.78 |

b. No. 9 oil, 0.031 inch wire; $P_s$ = 60.54

| L(cm) | 1 drop/ sec P(cm) | 2 drops/ sec P(cm) | 2.5 drops/ sec P(cm) |
|---|---|---|---|
| 10.3 | 51.91 | 48.20 | 41.04 |
| 5.5 | 43.92 | 36.91 | 33.54 |
| 3.6 | 37.80[A] | 31.42 | 25.84 |

A for column length 4.3 cm

c. No. 15 oil, 0.031 inch wire; $P_s = 61.94$

| L(cm) | 1 drop/ 6 sec P(cm) | 1 drop/ 4 sec P(cm) | 1 drop/ 2 sec P(cm) | 1 drop/ sec P(cm) |
|---|---|---|---|---|
| 10.0 | ------- | 54.05 | 52.86 | 47.27 |
| 6.0 | 54.46 | 52.63 | 48.88 | 41.72 |
| 3.0 | 49.04 | 43.13 | 38.36 | 35.34 |

d. No. 15 oil, 0.020 inch wire; $P_s = 61.94$

| L(cm) | 1 drop/ 2 sec P(cm) | 1 drop/ sec P(cm) |
|---|---|---|
| 16.0 | 39.07 | 36.61 |
| 10.0 | 32.88 | 33.62 |
| 6.0 | 31.46 | 29.91 |
| 3.0 | 25.03 | 21.20 |

## REFERENCES


1. Reamer, H. H., C. H. Duffy, and B. H. Sage, Ind. Eng. Chem., 48, 285 (1956).
2. Reamer, H. H., and B. H. Sage, J. Chem. Eng. Data, 6, 180 (1961).
3. Treybal, R. E., Mass Transfer Operations, (McGraw-Hill Book Co., New York, 1964) Ch. 4.
4. Higbie, R., Trans. Am. Inst. Chem. Engrs., 31, 365 (1935).
5. Kronig, R., and J. C. Brink, Appl. Sci. Res., A2, 142 (1950).
6. Emmert, R. A., and R. L. Pigford, Chem. Eng. Prog., 50, 87 (1954).

## FIGURE CAPTIONS

Fig. 1 Geometry of the flow of drops travelling on a vertical wire.

Fig. 2 Possible streamlines in a coordinate system moving with the wave velocity. The arrows indicate the direction of flow in this coordinate system.

(a) No circulating loop

(b) Double circulating loop

(c) Single circulating loop

Fig. 3 Schematic diagram of experimental apparatus.

Fig. 4 Gas absorption as a function of column length for No. 7 oil moving down the .031 inch diameter wire with a frequency of 2 drops/sec.

○ Taking $P_i = 0$ and L as the total length of column

● Taking P and $P_i$ as the measured concentrations for two column lengths differing by the amount L.

Fig. 5 Overall correlation of gas absorption as a function of dimensionless column length.

○ Number 7 oil, 0.031-in. wire, 1 drop/sec
● Number 7 oil, 0.031-in. wire, 2 drops/sec
◉ Number 7 oil, 0.031-in. wire, 3 drops/sec
▽ Number 9 oil, 0.031-in. wire, 1 drop/sec
▼ Number 9 oil, 0.031-in. wire, 2 drops/sec
▼ Number 9 oil, 0.031-in. wire, 2.5 drops/sec
◇ Number 15 oil, 0.031-in. wire, 1 drop/6 sec
◆ Number 15 oil, 0.031-in. wire, 1 drop/4 sec
◆ Number 15 oil, 0.031-in. wire, 1 drop/2 sec
◆ Number 15 oil, 0.031-in. wire, 1 drop/sec
□ Number 15 oil, 0.021-in. wire, 1 drop/2 sec
□ Number 15 oil, 0.020-in. wire, 1 drop/sec

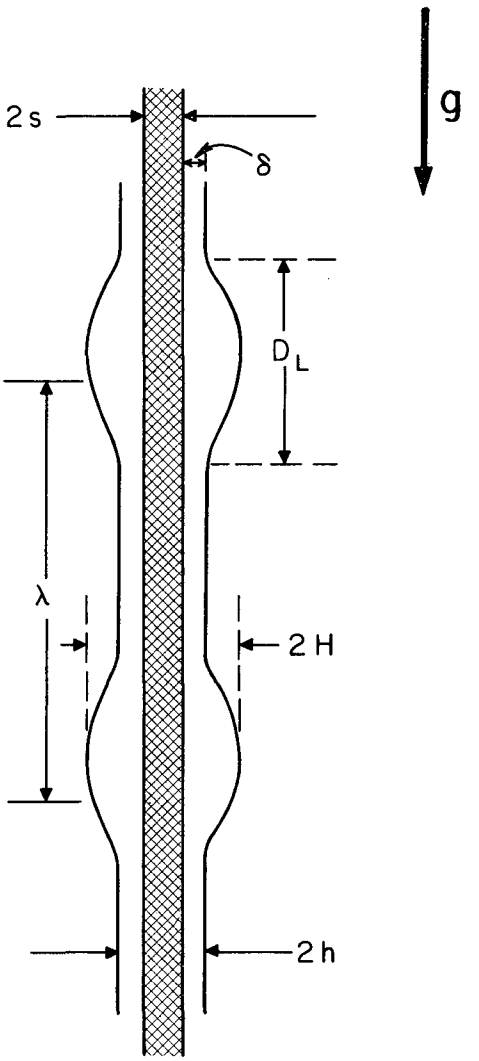


MU-35937

Fig. 1

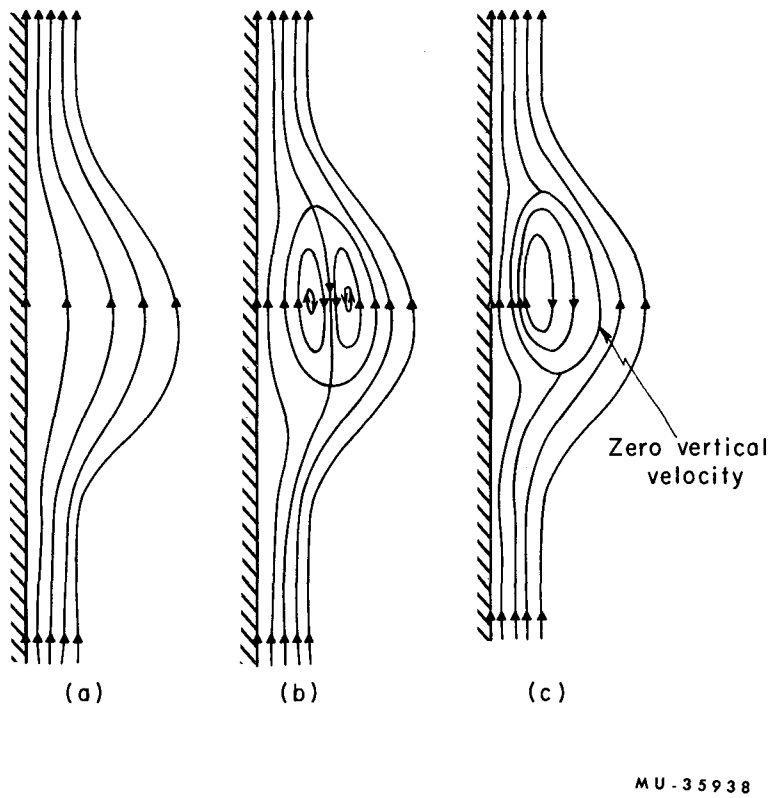


Fig. 2

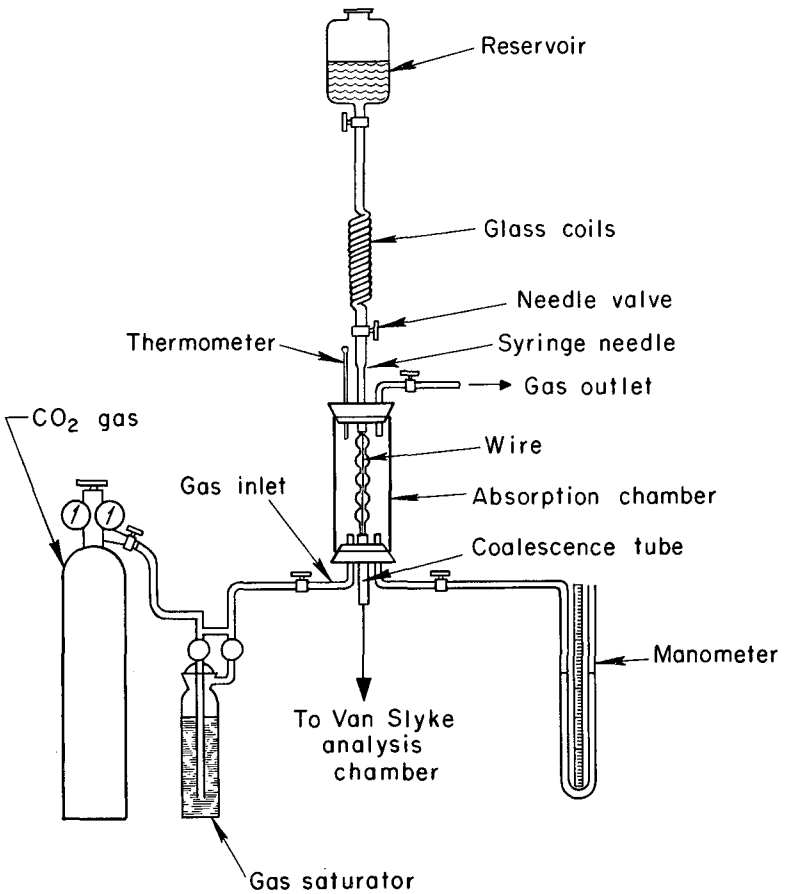


Note: All conections are made with Tygon tubing.

MU-35939

Fig. 3

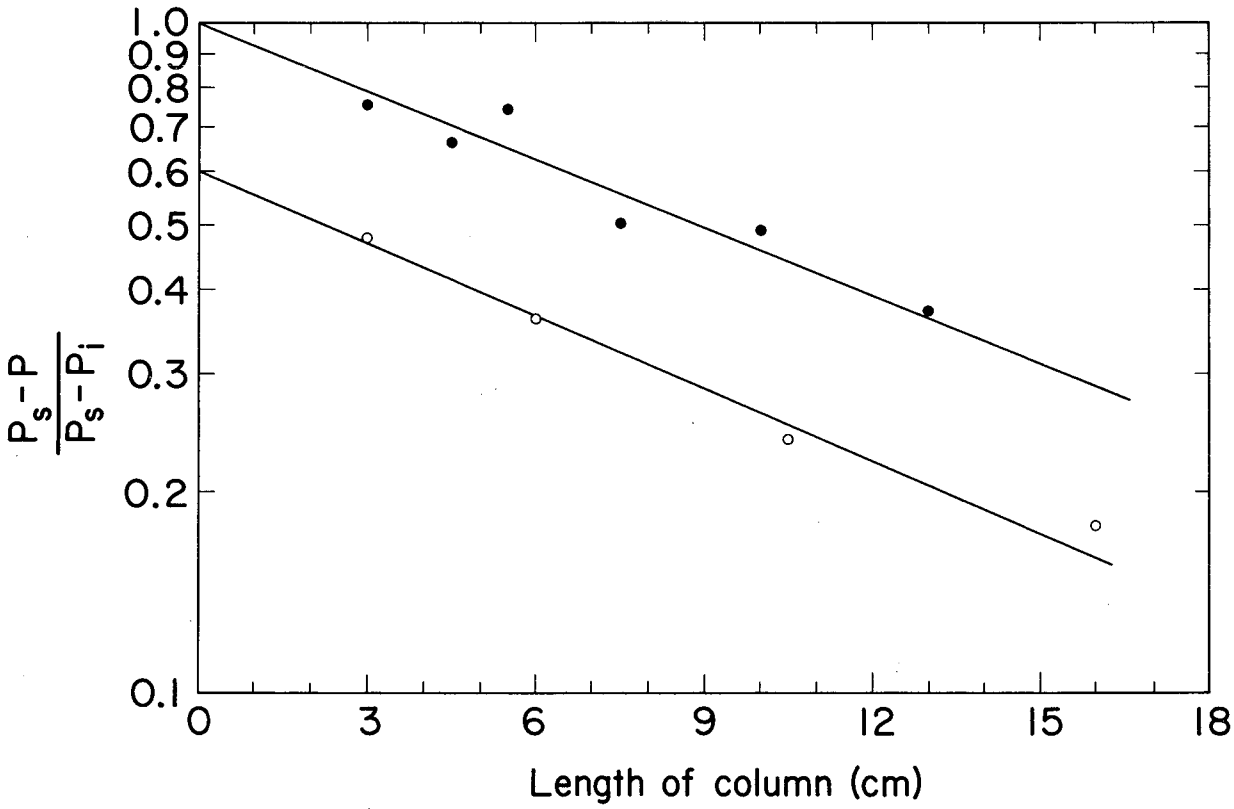


MUB-6827

Fig. 4

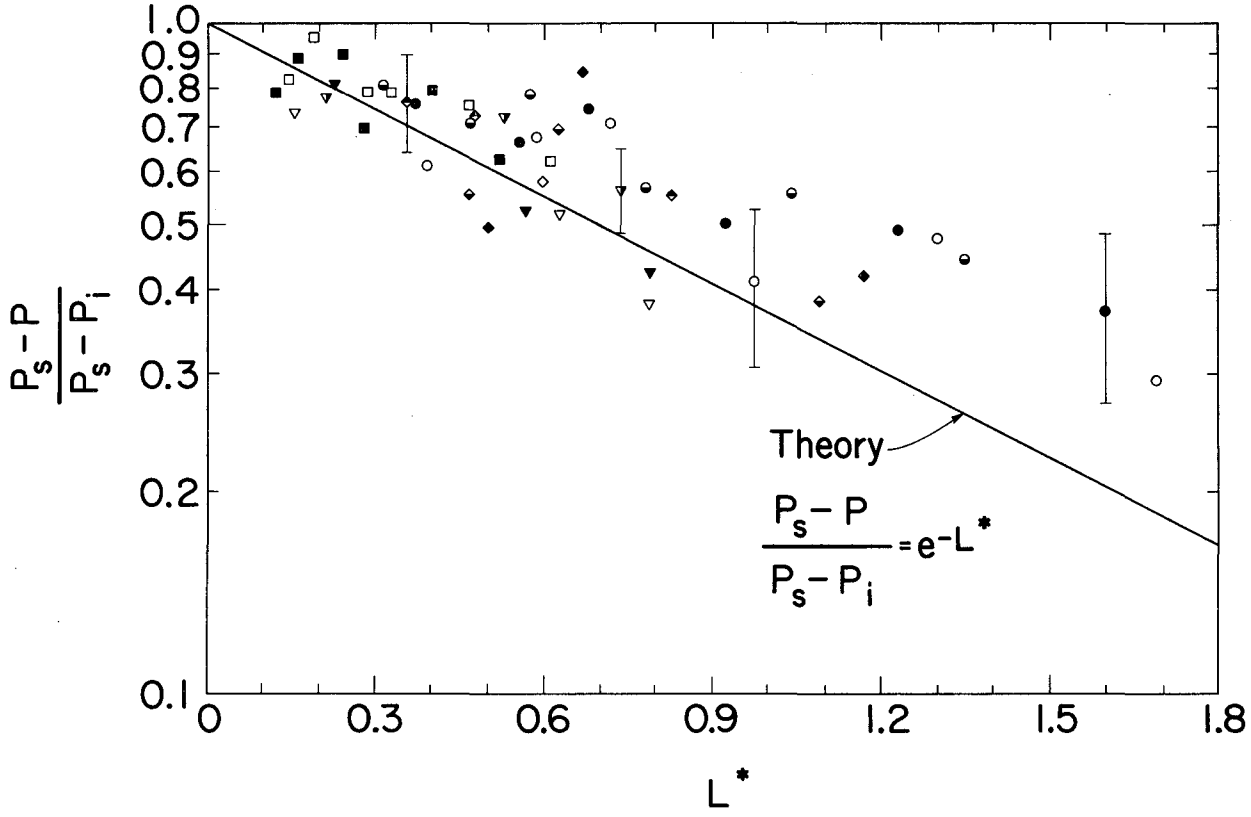


MUB-6826

Fig. 5