The Kinamo movie camera

Michael Buckland, Berkeley, California

Emanuel Goldberg developed a camera at Ica in the 1920s that enabled amateurs to make their own movies, and then he enlisted his own family to show them how to do it.

In 1909 the Carl Zeiss Stiftung consolidated its camera and photographic accessories operations into a subsidiary named Internationale Camera Aktiengesellschaft (Ica) in Dresden, Saxony—then the center of the German photographic products industry. In 1917 Zeiss appointed Professor Emanuel Goldberg, head of the photographic department at the Royal Academy for Graphic Arts and Bookcraft in Leipzig, as a Director of Ica to assist Guido Mengel, Ica's tough, self-taught manager.

Goldberg, a Russian scientist who became a naturalized German, had attracted Zeiss's attention through his contributions to aerial photography and ingenious lens-testing equipment. Goldberg had two assignments: to modernize procedures and to develop new military products. Modernization was achieved and was reflected in a stream of patents and registered designs (*Gebrauchsmuster*), but the development of new military products was halted by the severe restrictions on military activities imposed in the Treaty of Versailles.

Goldberg believed that there was a large potential market in equipment for amateur and semi-professional film-making. Ica, which was already making some movie equipment such as film projectors, was reorganized into two divisions, one of which continued the business of still cameras and general photographic accessories such as enlargers. But the other new division was solely involved, under Goldberg's direction, with movie equipment.

Emanuel Goldberg and his son Herbert taking shelter in an alpine shed. This is a frame enlargement from an untitled film made with a Kinamo camera.

The Kinamo camera

A product with which amateurs could successfully make home movies would have to be very easy to use, reliable, and yet inexpensive to manufacture. These constraints led to very severe design requirements. Movies were ordinarily made at that time with hand-cranked machines, requiring a tripod, which, in Goldberg's view, was a severe drawback to film-making. Disposing of the tripod meant dispensing with the crank, leaving two options: An electric motor, which in the early 1920s would also have been a constraint on filming, especially outdoors; or a spring-driven, clockwork motor, which was a difficult engineering

The Kinamo 35 mm cine camera in its original form with a hand crank rather than the later motor drive.This advertisement dates from 1924.

challenge. Ernst Wandersleb, head of the Photo Department at Carl Zeiss, Jena, later recalled a skiing vacation he had taken with Goldberg and others:

> "While we other comrades enjoyed the evening in the cosy hut on the Schwarzwasser Alp, having fun, eating, drinking, smoking, and singing, happy to be far from our jobs, Goldberg unpacked from a backpack an entire arsenal of small tools and worked for hours on the first Kinamo model, which he had brought, a new movie camera that he was developing then in Dresden."

The name Kinamo drew on Goldberg's school-day studies of Greek and Latin: *Kine* (Greek: Motion) + *amo* (Latin: I love) = I love movies! Ica liked to use derivative words such as Kinamofilm, Kinamomann, and a verb *kinamographieren* (to make a film using a Kinamo).

The first Kinamo was brought to market in 1921. It was known as the "N25" because the primary version (product code 5401) used film cassettes containing up to 25 meters of "Normal" (that is, standard 35 mm) film. A variant model (5402) limited to 15 meters of film was also sold.

A spring-driven motor was in experimental use in 1923 and marketed in 1924 for the 5401 model. It was a removable attachment that clamped to the side of the camera, doubling the width. The motor attachment was sold in two versions, with or without a delayed-action release (5401/6; 5401/4 respectively). The delayed-action release allowed the film-maker to act in the film. The scene would be posed and a scrap of paper or a leaf would be inserted in a small clamp on the front of the camera. The film-maker could start the timer and then join the scene. The clamp would release the scrap as a visual signal that the camera was about to start and acting should begin. The delayed-action release was important; with the easy-to-use Kinamo amateurs could make films by themselves, and with the delayed-action release they could even make films of themselves. Hence the promotional tag *Kinamo-Selbstaufnahme.*

The Kinamo had several user-friendly features. The light-tight film cassettes were easily changed even in sunlight. A button allowed the film to be marked at the end of a scene. Above all, the Kinamo was amazingly small, like a modern camcorder. The N25, although a motorized 35 mm camera, was only 15 cm high, 14 cm deep and 10 cm wide (6 × 5.5 × 4 inches). The N25 had a slow speed for slow-moving objects and for trick photography. It could also be used as a still camera.

In 1925 a slightly more elaborate version, the Universal Kinamo (5439) was introduced with two additional film speeds and able to accept an attachment that allowed it to copy existing films in a dark room. (If I have understood this mechanism correctly, a battery-powered light shone in through the lens mount to make a contact print of an existing film on to fresh film stock.) The N25 continued to be sold for about 10% less than the Universal Kinamo.

Amateur film-makers began to adopt 16 mm safety film, which was less expensive than 35 mm. Zeiss Ikon, formed in 1926 from the merging of Ica with other firms, responded with the Kinamo S10 (5490) which used 10 m cassettes of 16 mm "Schmalfilm" in 1929, followed by an improved model, the KS10 (5490/5).

Zeiss Ikon introduced the Movikon 8 mm and 16 mm movie cameras starting around 1933, and they appear to have completely replaced production of Kinamos by 1938.

Accessories and applications

As well as a tripod and a panoramic tripod head specially for the Kinamo, Ica marketed more specialized accessories.

The Goldberg Mikrophot microscope attachment allowed the filming of tiny objects through a microscope. In the barrel of a microscope a partially silvered mirror is set at a 45° angle, reflecting 99% of light from the object sideways into the lens of the attached Kinamo. The other 1% of the light passes through the mirror into the eyepiece as usual, just enough for the camera operator to use it as a viewfinder and to ensure that the object is in focus.

Zeiss Ikon had an interest in business applications, reflected, for example, in their marketing of bank-check copying equipment. Custom-built systems

installed by Zeiss for telephone companies substantially reduced errors and costs in the preparation of subscribers' monthly phone bills. The telephone exchange equipment counted each subscriber's calls on dials resembling automobile odometers. Once a month a clerk would read aloud each subscriber's count and another clerk would write the number down. Subtraction of that subscriber's previous month's count was the basis for the bill. The Zeiss Ikon solution used a Kinamo on a moving frame as a still camera to photograph about a hundred numbers per frame on 35 mm film. A special microfilm reader coupled with a calculator allowed a billing clerk to key the present and previous counts for each subscriber, then pulling a lever would calculate the monthly bill and advance the two films to the next subscriber's numbers. A dramatic improvement in accuracy and efficiency was reported.

Emanuel and Herbert Goldberg relaxing after pitching their tent, as seen in the film *Zeltleben in den Dolomiten (*Camping in the Dolomites).

Goldberg's use of the Kinamo

Goldberg himself experimented with the Kinamo and produced a number of short films with himself and his family and friends as the actors. In order to encourage sales of the Kinamo these were converted into promotional shorts by adding the Kinamo brand name on intertitles repeatedly stating that this was a Kinamo film, "Filmed handheld with the Zeiss Ikon Kinamo," and *Kinamo-Selbstaufnahme.*

Any film shown to the public had first to be registered with the German film censor and four such films were recorded:

Im Sonneck [In the sunny corner], registered December 5, 1924. 74 m long. Scenes from a day in the life of a child aged about two (Goldberg's daughter Renate Eva, now Mrs Chava Gichon) looked after by her older brother (Herbert Goldberg).

Ferientage am Matterhorn [Holidays at the Matterhorn]. December 5, 1924. 143 m. No copy has been located.

Zeltleben in den Dolomiten [Tenting in the Dolomites]. 9 min 29 sec. November 12, 1925. 130 m. A man and a boy (Goldberg and his son Herbert) and an unidentified youth pitch a tent in a lush alpine valley, and later climb up above the treeline, where they pitch the tent again as night falls.

Die verzauberten Schuhe: Eine heitere Kinamo-Tragödie [The magic shoes: An amusing Kinamo tragedy]. 12 min 55 sec. September 3, 1927. 230 m. A father (Goldberg) takes his family on a vacation in the Alps and loses his temper, causing his wife and daughter to cry. He storms off into the mountains. The son and a friend follow his tracks through the snow, find him sleeping, and decide to teach him a lesson. They attach a long cord to his shoes and hide at a distance, holding the other end of the cord. When the father awakes and reaches for his shoes, the boys use the cord to pull the shoes out of reach. The father has to keep chasing shoes and returns contrite and apologetic to the happily reunited family. Dramatic changes in the weather parallel the plot.

An untitled fragment, nearly eight minutes long and in the same style, also survives in which a father (Goldberg) takes his son (Herbert) on a winter cross-

"... and the clouds gather over the mountains." An intertitle from the Dolomite film (1925) includes the Zeiss Ikon logo, and was therefore added later. It also includes the promotional message ("Film yourself with a Kinamo") drawing attention to the delayed-action device that enabled the operator to appear in the scene.

These white streaks are an artefact of my ink-drop printer. Don't worry about them!

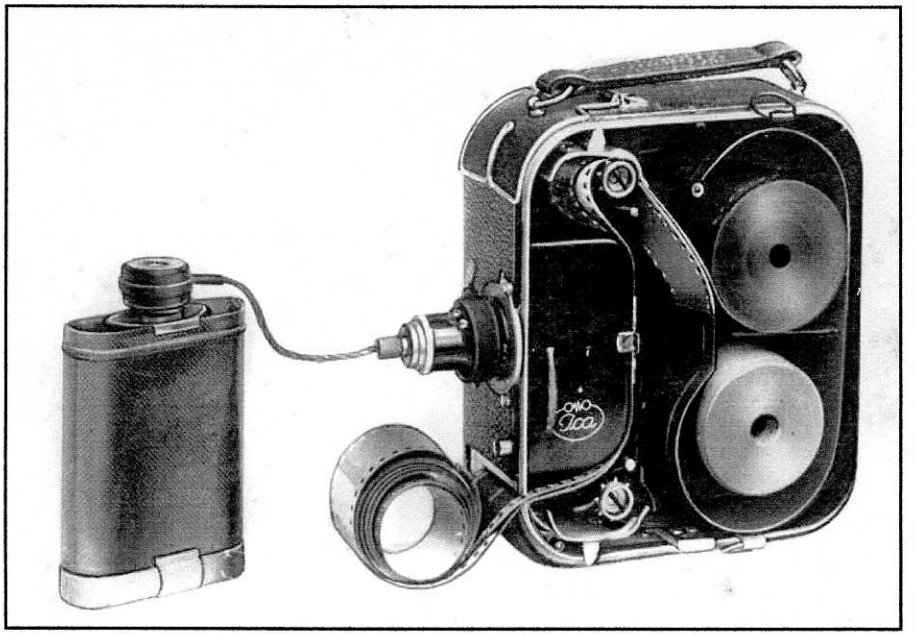

A film-copying device for the Kinamo. The battery-operated light on the left shines through the lens mount to make a contact print from an existing film onto fresh film stock inside the camera.

country ski trip. They take refuge overnight in a farm shed and, returning, find that a parcel of candies awaits them at the post office.

Copies of the first, third and fourth survive in a 16 mm copy of lost 35 mm origins in which the intertitles in the first and third have been updated in or after 1926 to show the Zeiss Ikon logo. A DVD has been created from a digital copy of these three and of the untitled fragment and copies are being made for distribution to Zeiss Historica Society members.

Goldberg was able to act in his own films by setting the Kinamo on a tripod, arranging the scene, setting the delayed-action release, and then taking his place in the scene. Acting started when the delayed-action mechanism released the signal and started the camera.

The marketing message implied in the promotional shorts was that anyone could make films like these of themselves and their own family if they bought a Kinamo. The implication was misleading. In fact these films are far from amateurish, they show very skillful composition, crisp editing, and quite sophisticated use of backlighting, shadows and entrances.

In spring 1927 Goldberg went on a skiing trip in Viggartal (near Innsbruck, Austria) with a group of students from the Technical University in Dresden where he was an adjunct professor in the Institute for Scientific Photography and

The Universal Kinamo with spring motor drive. The text continues: "The smallest movie camera allows, among other things, handheld filming without a tripod and filming yourself using a built-in automatic shutter release!", and a pricelist is offered free of charge.

taught courses on photography and cinematography. Together they made a skiing adventure film involving a romance and an accident: *Ein Sprung... Ein Traum. Eine Kinamogeschichte aus dem Studentenleben.* (A jump ... A dream. A Kinamo story of student life), 405 m. Film censor record dated June 23, 1927. An old nitrate copy was located in the German federal Film Archive in 2008 and new copies are being made.

Who else used the Kinamo?

The best documented Kinamo user was Joris Ivens, the famous Dutch pioneer of avant-garde and documentary movies, who wrote about Goldberg and the Kinamo in his autobiography.

The son of a photographic products dealer, Ivens had been sent to Germany to learn about the photographic industry and, in Dresden, worked on the Kinamo assembly line and was befriended by Goldberg. After he returned to the Netherlands, Ivens was inspired by his experiments using a hand-held Kinamo.. He later wrote: "I was, naturally, freed from the rigidity of a tripod, and I had given movement to what, normally, would have had to be a succession of fixed shots. Without knowing it, filming flexibly and without stopping, I had achieved a continuity. That day I realized that the camera was an eye and I said to myself, 'If it is a gaze, it ought to be a living one'." He then used the Kinamo to make a short, fast-paced documentary The Bridge, a symphony of the movements on and around a railway bridge in Rotterdam, and several other films with Kinamos.

Unfortunately, film historians have been heavily preoccupied with æsthetics and personalities and it is generally difficult to know who used what camera for any given film.

The evidence is scarce, but it appears to be the case that the Kinamo was widely used among avant-garde, adventure, and documentary film makers in Europe in the late 1920s and early 1930s including Sepp Allgeier, Wilfried Basse, Ella Bergmann-Michel, Boris Kaufman, Henri Storck, Dziga Vertov, and, later, Jacques Cousteau.

In 1921 Ica, in collaboration with Contessa-Nettel (Stuttgart) and Mimosa (a film manufacturer in Dresden) began to publish *Photo-Technik*, an attractive and instructive magazine for amateur photographers. It was distributed free through 1925. In 1926 the Ernemann and Goerz companies joined as co-publishers and, effective 1927, Zeiss Ikon, in which all but Mimosa had merged, became the sole publisher. *Photo-Technik* is of interest because it served as a showcase for Ica and Zeiss Ikon products and innovation and it reflects Ica's, and later Zeiss Ikon's, corporate views. There are several articles relating to the Kinamo and some of the illustrations can be recognized as frame enlargements from Goldberg's films. (In 1925 Ica started a separate magazine for cinematography and projection, *Der Bildwerfer,* which was published until 1928).

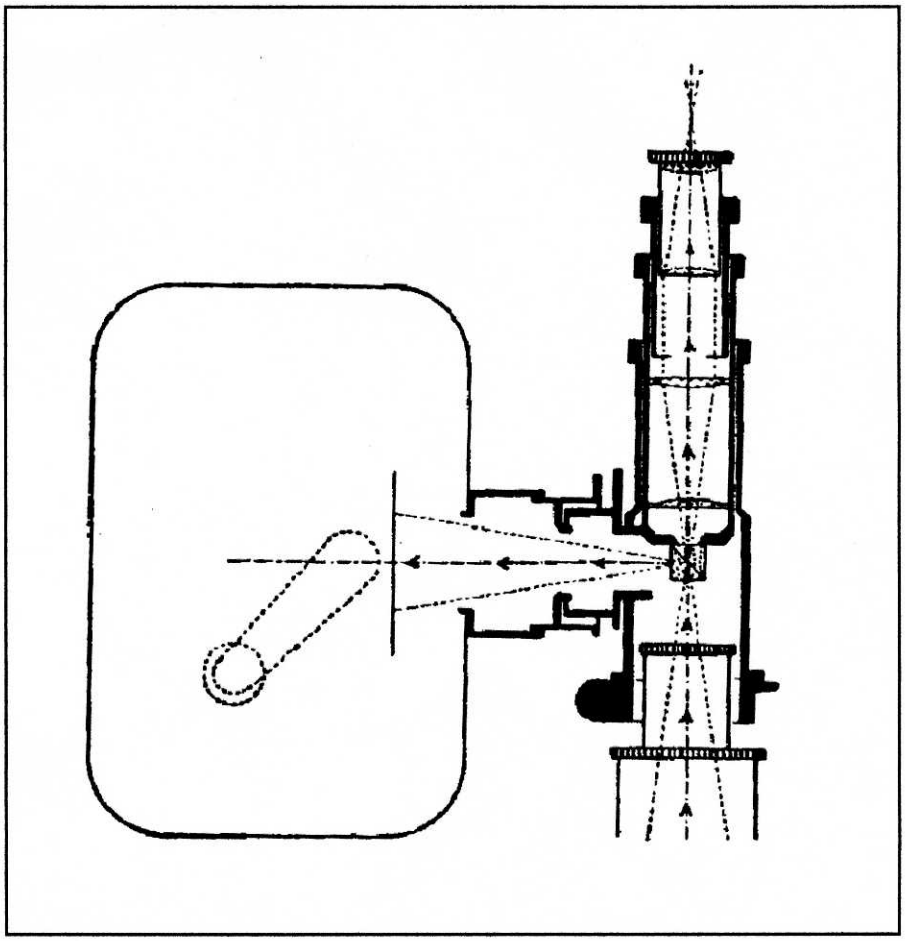

The Mikrophot microscope attachment for the Kinamo. The diagram shows that light from the object to be examined is split by a semisilvered mirror in the microscope barrel, with most going into the Kinamo but enough continuing up into the microscope eyepiece for positioning and focusing.

The Kinamo: an all-purpose camera

The first issue of *Photo-Technik* announced the new Ica Kinamo and also contained an article on what seems to have been a popular topic: the need for a camera that was really versatile, an all-purpose camera. In the German text the adjective "universal" is used. Not surprisingly, given the publishers, the author argues for the Contessa Nettel when used with Mimosa film. The topic of a "universal" camera recurs again in later issues.

The improved 35 mm Kinamo introduced in 1925 was named the Universal Kinamo. Did the name reflect a positioning of the Kinamo to be the dominant

Goldberg's daughter Renate (now Mrs Chava Gichon), as seen in a frame enlargement from the 1927 film *Die verzauberten Schuhe...*(The enchanted shoes).

camera for all purposes? Certainly the claims made for the Kinamo could build such a case. It could function as a still camera as well as a movie camera, and it was no larger and no more expensive than a good-quality still camera. Furthermore, a movie camera could outperform a still camera in two ways. First, the human eye, being attracted by movement, would tolerate flaws in image quality in a moving image that would be offensive in a still. Second, if a still image was needed, a short burst of filming provided a series of images from which the best one could chosen, avoiding the common experience of a single still-camera shot being ruined by a blink or mistimed movement. The short focal length of the lens minimized the danger of the subject being out of focus and, it was claimed, the quality of the equipment and the lenses allowed satisfactory enlargements to be made to print sizes commonly used in ordinary still photography. An article in *Photo-Technik* by Kurt Dienstbach argued that it was easier to use a movie camera than a still camera.

Some months later George Brown, the editor of the *British Journal Photographic Almanac,* in an essay on amateur cinematography, made the following remarkable statement:

> "The head of one of the largest camera-making facilities on the continent is credited with having stated that he would be surprised if in 1930 his workpeople were employed in making any amateur cameras but those taking motion pictures."

No source is given, but the signs point to Goldberg: In British writing "on the continent" means continental Europe, excluding the British Isles; Zeiss Ikon was the largest camera firm in Europe and aggressively promoting the Kinamo; the claim is compatible with articles in *Photo-Technik*; it is the kind of startling statement he liked to make; and it hard to imagine who else it could or would have made such a statement.

Of course, we now know that it did not happen. Instead, still and amateur film formats diverged with the unexpected success of the Leica, introduced in 1924 with its double-frame 35 mm format, and the shift of amateur filming to 16 mm and smaller. In 1930 Goldberg and his staff were scrambling to make the Contax ready for market.

The small size, ease of use, spring motor, and robust construction made the Kinamo a camera of choice not only for making home movies but also for inconspicuous filming and extreme physical conditions, such as the alpine skiing sequences. It was used by some important film-makers and it has been credited by Kuball with making home movies popular among the wealthy, at least in Germany. The Kinamo did not become a "universal" camera, but it deserves more attention than it has received. ❐

Sources

Brown, George E. "Amateur cinematography," in *British Journal Photographic Almanac* (1926): 179–200, 182.

Buckland, Michael. *Emanuel Goldberg and his Knowledge Machine: Information, Invention, and Political Forces.* Westport, CT: Libraries Unlimited, 2006. ISBN 0-313-31332-6.

Buckland, Michael. *The Kinamo camera, Emanuel Goldberg, and Joris Ivens,* Film History 20, no, 1 (2008): 49–58. http://muse.jhu.edu/journals/film_history/v020/20.1.buckland.pdf
Preprint:
http://people.ischool.berkeley.edu/~buckland/kinamo08.pdf

Dienstbach, Kurt. "Ist die Filmaufnahme leichter als die photographische Aufnahme?" [Is filming easier than taking still photos?], *Phototechnik* **19** (December 1925): 354–356.

Goldberg, Emanuel. "Bewegungssynthese in der Kinematographie" [The synthesis of movement in cinematography], *Die Kinotechnik* **8**, Heft 13 (10 July 1926): 333–336.

Hergersberg, Jochen and Martin Koerber, "Alte Kameras: Eine Blick in die Sammlung der Stiftung Deutsche Kinemathek," [Old cameras: A look at the collection of the Deutsche Kinemathek Foundation], in *Von Cinema Quadrat* (eds.), "Gleissende Schatten: Kamera Pionere de Zwangiger Jahre" [Gliding shadows: Camera pioneers of twenties]. (Berlin: Henschel Verlag, 1994), 95–110.

Kuball, Michael., *Familienkino: Geschichte des Amateurfilms in Deutschland* [Family cinema: History of amateur films in Germany]. (Hamburg: Rowohlt, 1980), 62.

Rikli, Martin. *Mikro-projektion, Mikro-photographie und Mikro-Kinematographie* [Microprojection, photomicrography, and microcinematography]. Photo-Technik **5** (Jan. 1927): 102–108.