Title
CONFERENCE SUMMARY

Author
Clark, David J.

Publication Date
1975-10-01

Presented at the International Conference
on Heavy Ion Sources, Gatlinburg, TN,
October 27 - 30, 1975

LBL-4348
c.1

CONFERENCE SUMMARY

David J. Clark

October 1975

Prepared for the U. S. Energy Research and
Development Administration under Contract W-7405-ENG-48

DISCLAIMER

CONFERENCE SUMMARY

David J. Clark

Lawrence Berkeley Laboratory
University of California
Berkeley, California 94720, U.S.A.

Summary

This paper reviews briefly the main results presented at this conference. The sections are as follows: Highlights, General Observations, Fundamental Processes in Sources, Positive Ion Sources, Negative Ion Sources, Beam Formation and Emittance Measurements, Stripping, Accelerators and Experiments, and Future Prospects.

Introduction

I wish to thank the Conference Chairman, Bob Livingston, and the Program Committee for the privilege of summarizing this conference. The papers presented us with the latest progress in heavy ion source research and technology. Of equal importance were reports on studies of the fundamental processes which occur in ion formation, beam extraction and emittance measurements, and stripping processes in gases and foils. There were also several excellent papers on heavy ion acceleration projects and the experiments to be done there. The performance of these accelerators and the quality of experiments are heavily dependent upon the intensity, quality, and mass range of beams available from the heavy ion sources. In this short summary paper I can mention only a fraction of the large variety of work described here in over 50 papers. For the whole story the reader should certainly consult the complete proceedings.

As usual the local organizing committee from Oak Ridge arranged an excellent conference schedule, including social activities. The outdoor dinner and folk dancing were enjoyed by everyone, especially the large friendly bear. There were two free afternoons when the delegates could travel to the old settlement at Cades Cove or up to the ridge of the Smoky Mountains. The fall colors were at their peak near the altitude of Gatlinburg. The delegates who went to Oak Ridge National Lab after the conference had a congenial dinner there Thursday evening before the tour on Friday. Many spent a comfortable night at the Royal Scottish Inn (formerly the Holiday Inn). The tour was organized to include the ORIC cyclotron, a description of the plans for the new 25 MV tandem accelerator facility, and the Van de Graaff Laboratory. After lunch the group went to the Thermonuclear Division to see the ORMAK and ELMO Bumpy Torus experiments, and the associated neutral hydrogen sources used for injection. The delegates were impressed by the wide variety of ion source work being done at Oak Ridge.

The opening address by Zucker of Oak Ridge gave an interesting historical perspective on the early development of N^{3+} sources at Oak Ridge. The motivation was weapons effects, but this source formed the basis of future PIG source development at Berkeley, Dubna and elsewhere. The work at Oak Ridge was in turn based on the Calutron sources developed at Berkeley for uranium separation in the early 1940's. Those sources came from the cyclotron sources of the 1930's where the magnetic field was free. So we see a step-by-step process of PIG source development with contributions from many groups from the 1930's to the 1950's. The new sources are now in a period of rapid growth, with development underway in many laboratories. There were informative evening sessions on the EBIS, and emittance measurements. This was an excellent opportunity for all of the EBIS groups to meet with Donets, its prime developer, and discuss technical questions.

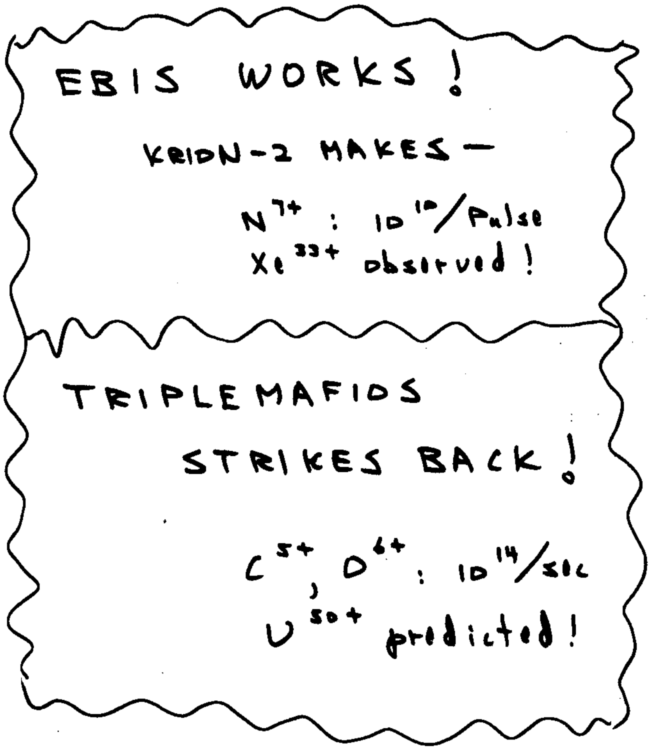

Fig. 1. Conference highlights.

Highlights

This Conference follows the tradition of the previous one, also at Gatlinburg, four years ago at this same colorful time of year in the Smokies. There was much progress in the heavy ion source field during these four years. To me the highlights of the Conference were the presentation of results obtained in the past year by the Dubna group under Donets, who developed the EBIS (Electron Beam Ion Source), and by Geller's group at Grenoble building ECR (Electron Cyclotron Resonance) sources. These highlights are illustrated in Fig. 1. These sources show significant improvement in charge state distribution over the present standard PIG (Penning Ion Gauge) source. This is illustrated in Fig. 2 by plotting some of the nitrogen data presented here, interpolating between carbon and oxygen for ECR, along with some older PIG source data[1]. The EBIS has produced the spectacular

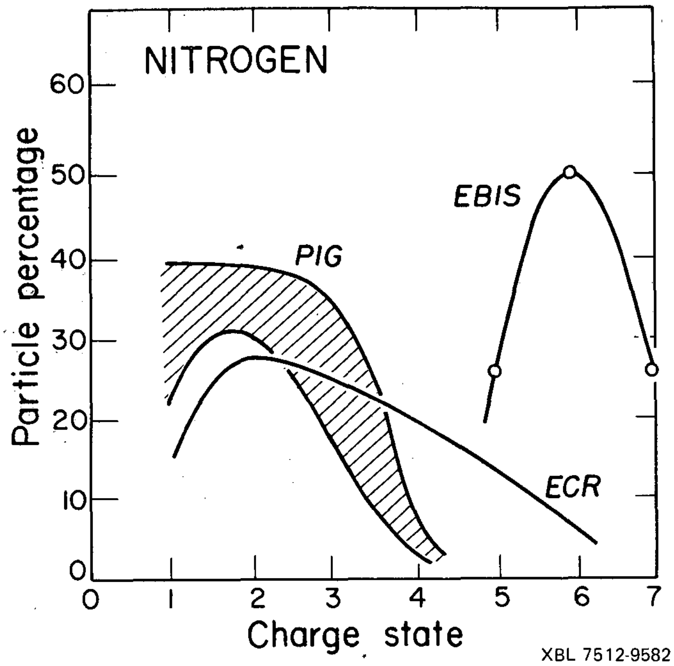

Fig. 2. Charge state distributions of three types of positive ion sources.

result of 25% fully stripped nitrogen beams, with 10^{10} particles/pulse intensity. The ECR has an intermediate distribution between the PIG and EBIS, but has the advantage over EBIS of a long duty cycle. The plasma regimes of these sources are shown in Fig. 3, an updated version of a similar plot by Winter and Wolf in 1974.[2] Their electron temperature and $n\tau_i$ values are indicated. The electron temperature must be several times the ionization potential of the last electron removed, for efficient ion production. $n\tau_i$ must be large enough to make the high charge states. The new EBIS and ECR sources have higher $n\tau_i$ and electron temperatures than conventional PIG and duoplasmation sources and so make the higher charge

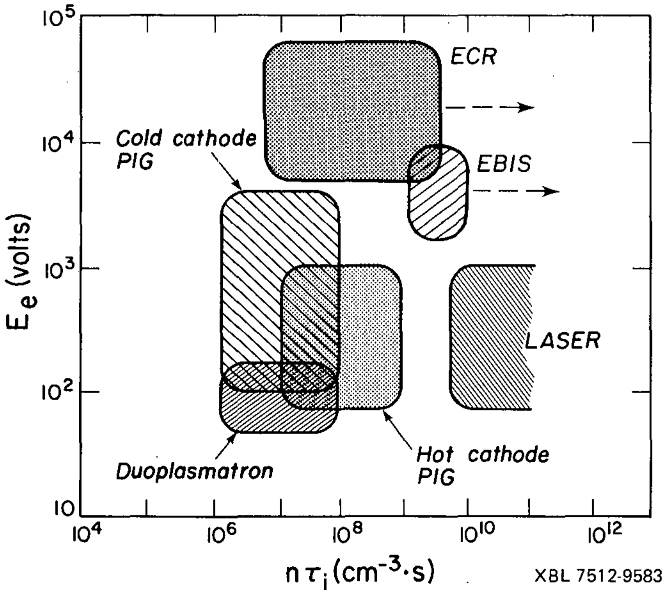

Fig. 3. Plasma parameters of positive ion sources. E_e is electron temperature, n is electron density. τ_i is ion confinement time.

state ions shown in Fig. 2. The LASER source also has a high $n\tau_i$, but has a very short duty factor. The arrows in Fig. 3 indicate that the EBIS and ECR are still being improved.

General Observations

There are a number of observations I made while dutifully attending each session. One is the phenomenon of discovery of an important result by accident. Of course the discovery requires experience and alertness by the experimenter to evaluate and use the result. An example of this is the discovery of back bombardment production of solid material beams by Hudson, Mallory and Lord, when a large copper beam appeared during a xenon acceleration run. This effect has proven to be a simple and effective method of producing beams from solid materials in cyclotrons. Another example, described by Middleton, is the discovery that the addition of oxygen improves the lithium beam from a sputter source. Oxygen is easy to add by accident. This is now a standard mode of source operation. A third example, reported by Fasolo, was the observation of a large current of heavy negative ions found as a contaminant in an H^- beam. These ions were from wall outgassing, but could also be used in the future in a controlled way.

Another interesting type of information presented was the description of ideas that didn't work. Bethge described some attempts to use high magnetic field and electron injection to improve the charge state distribution in an axial extraction PIG source. There was no significant improvement, but it is well worth reporting this experiment to save the time of other groups, and indicate more promising directions to proceed.

We all learned some new vocabulary during the Conference. Some of the words which I now understand better are electron affinities and ab initio calculations, discussed in negative ion sessions. In the EBIS work we heard about electron gun perveance and Brillouin flow of electron beams. In the field of PIG sources, I am familiar with hot and cold cathode PIG sources, and know that cold cathodes sometimes run hot, but this can be confusing to the listeners outside the PIG groups. "Arc-heated cathodes" would better describe cold cathodes that run hot.

There are some mysteries to be unravelled in the future. An example is the origin of the high energy electrons in the PIG source observed by Schulte, Wolf and Winter. Another question for the future raised by Stelson is what the average charge of a uranium beam will be from the Berkeley SuperHILAC at 8.5 MeV/nucleon, after passing through a stripping foil. There is a disagreement between different theories, including Stelson's.

A special commendation for heroic performance in the face of severe technical difficulties must go to Joyce Kaufman, who continued her talk on electron affinities without slides, when the projector failed. To the listener there was practically no discontinuity in the talk.

In the following sections I will review briefly the topics covered in the sessions, with emphasis on the excellent review papers which bring us up-to-date and give us some predictions of the future.

Fundamental Processes in Sources

In the session on fundamental processes in sources there were several very interesting invited papers on electron bombardment and charge exchange cross-sections, electron affinities, sputtering, VUV spectroscopy, and

H^- formation. The papers by Dunn of Colorado and Salzborn of Giessen reviewed the cross-sections for electron-ion, ion-ion, and ion-atom collisions. These processes are fundamental in understanding the formation of ions in plasmas or electron beams, and also in interactions of ion beams with gases and solids in strippers and in residual vacuum. The status of theoretical calculations of electron affinities was reviewed by Kaufman of Johns Hopkins, showing good agreement with experimental values. The experimental situation on electron affinities was summarized by Lineberger of Colorado. The electron affinities, or binding energies, determine the production rate of negative ion beams from sources, and so are of great significance for tandem accelerators.

A review of the sputtering process was given by Andersen of IBM and Aarhus. Sputtering occurs inside sources, on extraction electrodes, and on collimators and targets. It usually is a problem, as in the erosion of PIG cathodes or extractors. In these cases one chooses materials with low sputtering rates like tungsten, tantalum or titanium. But sputtering also can be very useful, as in the case ofproduction of beams from solid materials in both positive and negative ion sources. This paper gives many useful references. It also presents an interesting electron micrograph of a sputtered surface, Fig. 4, illustrating the striking deviation of the surface from the smooth one assumed by theorists. This complicated surface may contribute to "dose effects": the change of sputtering yield with time by as much as a factor of 10.

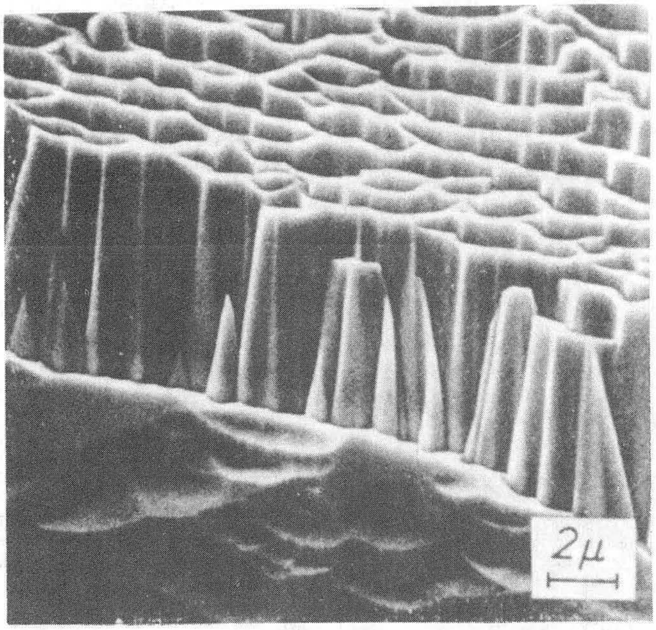

Fig. 4. Scanning electron micrograph of polycrystalline tungsten surface after sputtering. (Andersen).

Other papers discussed studies of H^- formation and charge exchange of hydrogen with heavy ions at SRI, and VUV spectroscopy work on source plasmas at Vienna.

Positive Ion Sources

Some comparisons of positive ion source performance and plasma parameters were given in Figs. 2 and 3. The standard source for heavy ion cyclotrons, linacs and recently a synchrotron (the LBL Bevatron) has been the PIG. Some excellent work has been done on duoplasmations at GSI, and recent exciting results have come from the ECR and EBIS groups.

PIG Sources

The development of several types of PIG source at GSI, Darmstadt was described by Schulte, Jacoby and Wolf in a review paper. One type, shown in Fig. 5, has a filament-heated cathode similar to that of the Dubna design. A biased sputtering electrode is used for solid material feed, giving beams of 10 μA peak of Pb^{10+} and 4μA dc of U^{11+}. An arc-heated PIG source has been used for tantalum beams. A variation of sputtering electrode geometry developed by Gavin of LBL is shown in Fig. 6. This is a pair of ring sputtering

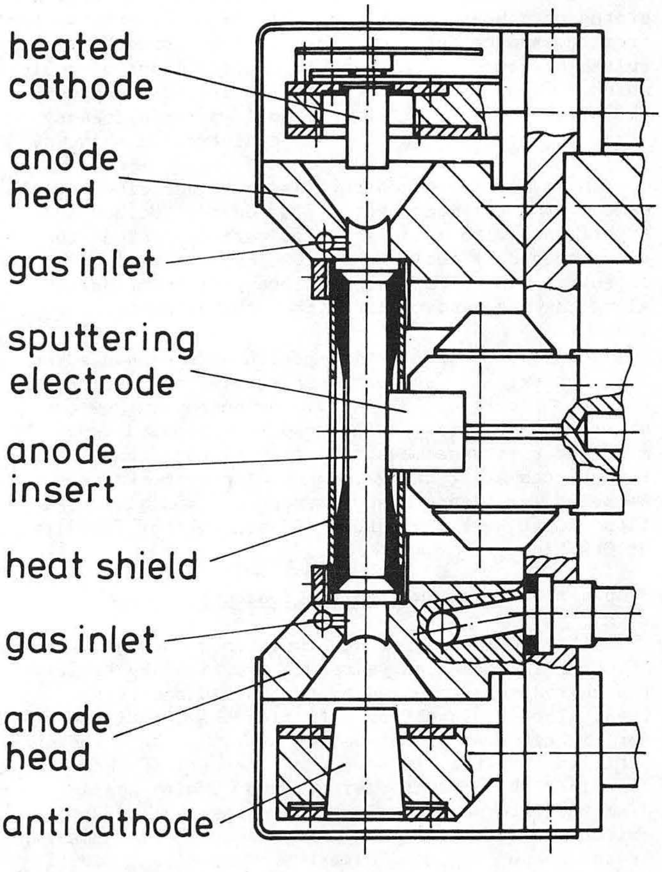

Fig. 5. PIG source with filament-heated cathode and sputtering electrode developed at GSI, Darmstadt. (Schulte, Jacoby and Wolf).

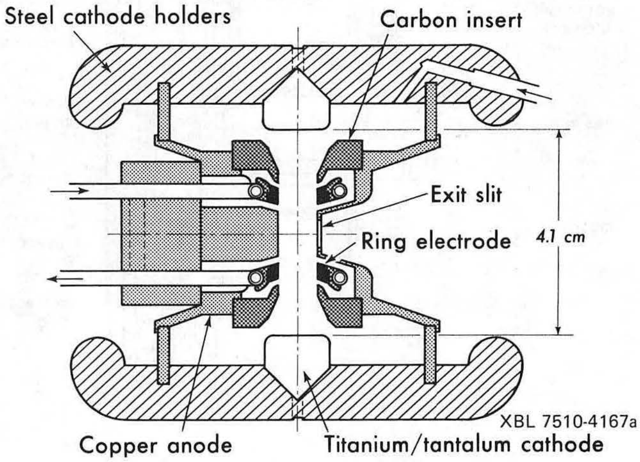

Fig. 6. PIG source with new ring sputtering electrode geometry, LBL (Gavin).

electrodes between the extraction slit and the cathodes. Gavin reports an increase in Au^{9+} intensity to 10μA peak with the ring structure, an increase of a factor of 3 compared to a single electrode behind the slit. Another method of sputtering is used by Hudson, Mallory and Lord of ORNL. This uses a system which occurs naturally in a cyclotron ion source. The low charge states of a heavy support gas like xenon are extracted from the source but are returned to it when the rf voltage reverses. They sputter material out of a block which is inside and tangent to the arc bore, opposite the slit. A large variety of solid material beams have been produced in the ORIC cyclotron in this way.

Makov of the Kurchatov Institute described development of a filament-heated PIG source. He has done experiments with magnetic field variation along the arc produced by coils around the cathode regions. The objective was to control the potential distribution along the arc, and create higher charge states.

Many other interesting papers were presented on PIG sources, such as the basic studies by Schulte, Wolf and Winter of GSI and Vienna on power flow and electron velocities. Other papers discussed development and emittance measurements for end extraction PIG sources at Frankfurt, vacuum improvements at Berkeley, emittance measurements on a radial extraction PIG at Berkeley, and a PIG source test facility at Oak Ridge.

Duoplasmatron and Duopigatron Sources

The development of duoplasmatrons for heavy ions at GSI over the past ten years was described by Keller. The charge/mass required by the UNILAC accelerator is .046. The duoplasmatron satisfies this requirement well for lighter heavy ions such as Ar^{2+}. At Xe^{6+} the competition with the PIG source becomes stiff. Keller described the present design, Fig. 7, with small diameter intermediate electrode (often called Z or zwischen electrode in English), magnetic field maximum at the anode hole, and better anode cooling, Fig. 8. This design has greatly increased the output of Xe^{6+} to over 30μA peak. Other papers presented duoplasmatron applications for Ne^{3+} at Berkeley and He^{2+} at Bucharest, and duopigatron production of argon beams at Orsay.

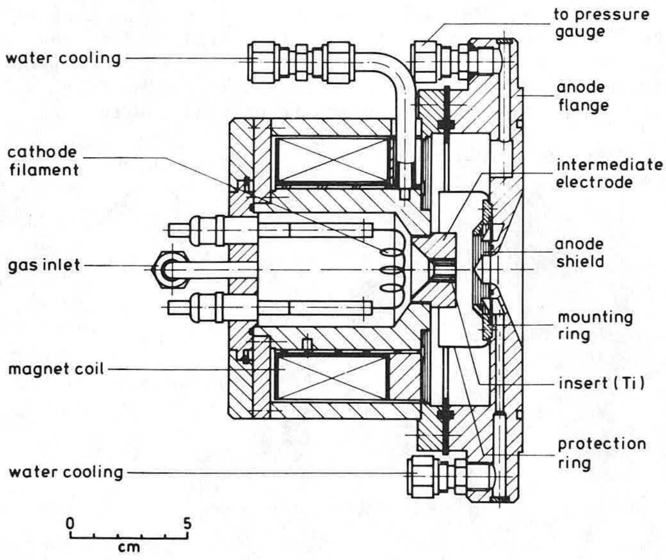

Fig. 7. Latest GSI duoplasmatron source for Ar^{2+} and Xe^{6+} (Keller and Müller).

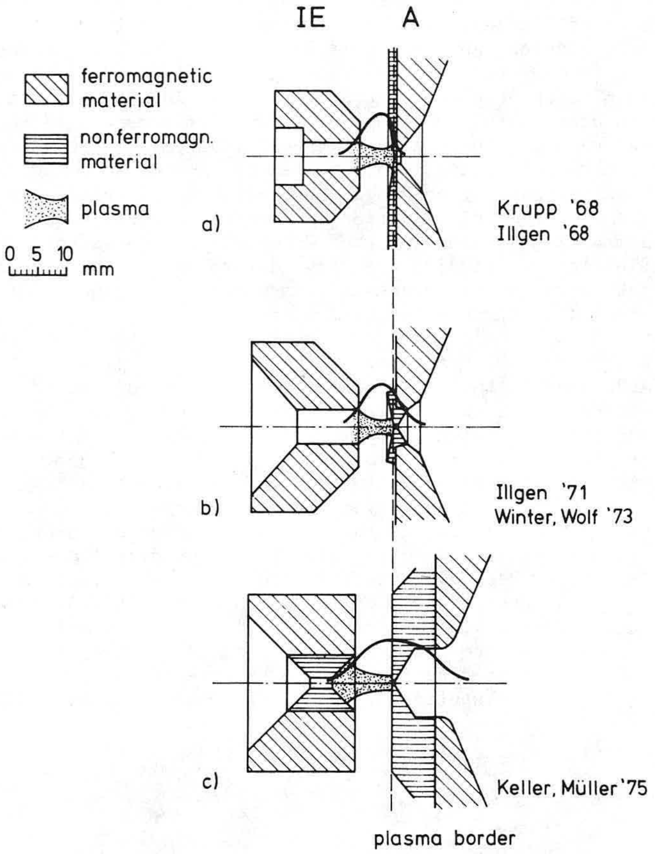

Fig. 8. Evolution of intermediate electrode anode design in GSI duoplasmatron (Keller and Müller).

ECR (Electron Cyclotron Resonance) Sources

The most successful results from ECR sources have come from Geller's group in Grenoble, which has been building such sources for ten years. Three successful versions were reviewed at the Conference: MAFIOS, SUPERMAFIOS and TRIPLEMAFIOS. MAFIOS is shown in Fig. 9.

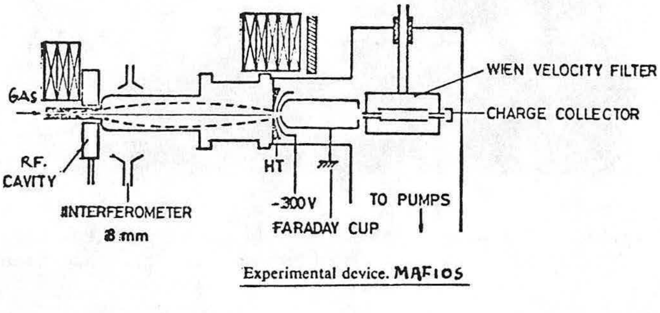

Fig. 9. ECR single stage source MAFIOS at Grenoble (Geller).

This is a single stage source using 2 kw of microwave power at 10 GHz to create the plasma, which diffuses into a mirror field where high charge state ions are created by bombardment with kilovolt ECR electrons. The total output is over 20 mA, and the charge distribution is similar to that of a PIG source. It has the advantage over the PIG of having no electrodes to erode, and so has a very long lifetime. Geller believed that there was a basic limitation in high charge state production from this source due to the high pressure and limited confinement time of the ions. So he built a new device with two stages, SUPERMAFIOS. Here a second magnetic mirror and microwave cavity was used. This system is shown as the first two stages of Fig. 10.

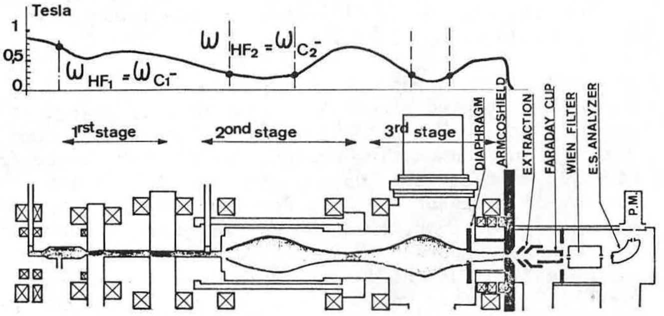

Fig. 10. ECR 3-stage source TRIPLEMAFIOS. First two stages are SUPERMAFIOS (Geller).

The high charge state distribution was much improved over MAFIOS, with charge states up to Xe^{18+} (.08%) observed. The time evolution of xenon charge states is shown in Fig. 11. The output of this source was only 30 μA because extraction was from a region of low plasma density. So a third stage of mirror field was added to compress the plasma, and a magnetic shield reduced the field quickly at the extractor for optimum extracted quality, Fig. 10. This system is called TRIPLEMAFIOS. This triple system gives about 300 μA, 10 times the beam of SUPERMAFIOS. More is available but a collimator is used to prevent Faraday cup outgassing, by blocking some of the plasma at extraction. The charge distribution is somewhat better than SUPERMAFIOS: 2% O^{7+} compared to .5%, due to the longer diffusion time. The success of this source illustrates breaking through the limitations of pressure and confinement time of the single stage source. This same limitation applies to PIG sources, which are also single stage devices.

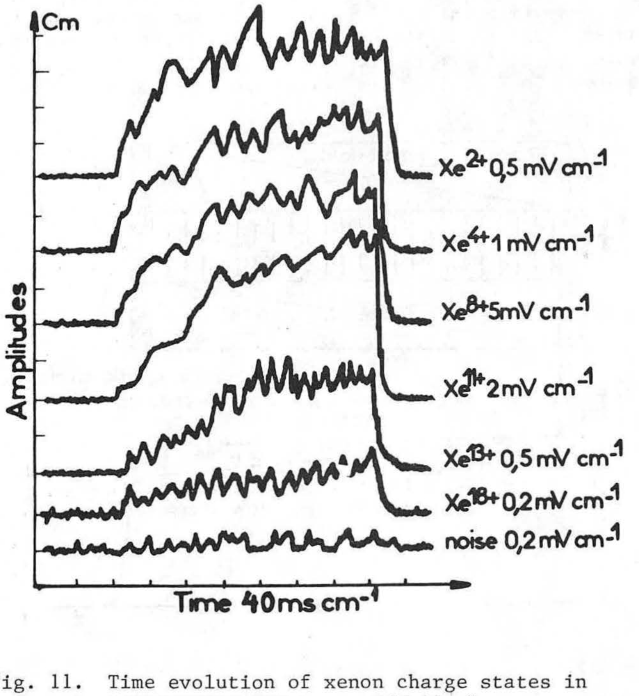

Fig. 11. Time evolution of xenon charge states in SUPERMAFIOS ECR source (Geller).

Other groups at ORNL and Marburg reported results of single stage ECR sources. The charge state distributions are similar to or somewhat better than the PIG but the extraction systems have not been fully developed. The ORNL system, INTEREM, is shown in Fig. 12.

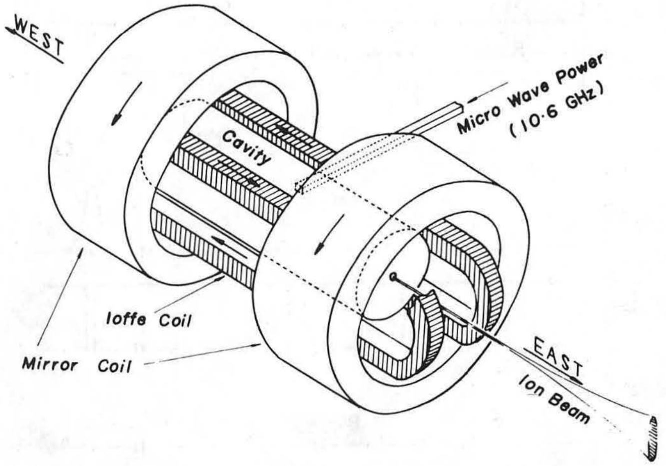

Fig. 12. ECR source INTEREM at ORNL showing coil systems. (Tamagawa, Alexeff, Jones and Miller).

EBIS, Confinement and LASER Sources

Another source breakthrough which occurred in the last several years is the successful operation of the EBIS (Electron Beam Ion Source). This source produces very high charge states (Xe^{29+}) and has the prospect of important applications in accelerator injection, polarized ion production, and atomic physics studies.

It has reached its greatest success at Dubna in the group led by Donets. Donets proposed this source in 1967. Since then he has built four versions: EBIS-1, EBIS-2, KRION-1 and KRION-2. EBIS-1 and EBIS-2 have normal conducting coils and the KRION's have superconducting coils for better field uniformity and low power consumption on a high voltage platform.

A schematic drawing of the EBIS configuration and potential distribution is shown in Fig. 13. The timing

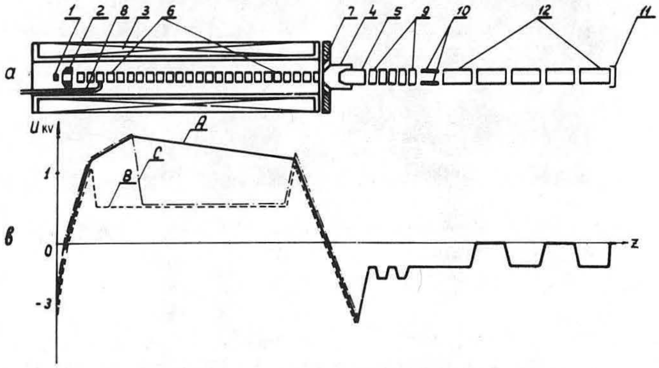

Fig. 13. Schematic view of EBIS source KRION-1 and potential distribution. In upper view electron beam passes from gun (1,2) through drift tubes (6) to collector (4). Charge states are analyzed by a time-of-flight mass spectrometer (9, 10, 11, 12). In lower view potential distribution along axis is that of (B) during injection, (C) during ionization and (A) for extraction. (Donets).

sequence is shown in Fig. 14. The time-of-flight spectrum for xenon is shown for ionization times from 3 msec to 39 msec in Fig. 15. This illustrates beautifully the gradual build-up of high charge states. At 39 msec the average charge is Xe^{24+}, with Xe^{29+} seen at 10% of the Xe^{24+} intensity. The intensity is about 10^{10} ions/pulse. The electron beam current was 1.5 A with a density of 30 A/cm^2 and an energy of 2.3 keV. The residual pressure was 2×10^{-11} torr using a liquid helium pumping system at 4° K. The magnetic field from the superconducting solenoid was about 1.3 T. An improved version of this source, KRION-2, has been built for continued development, since KRION-1 has been installed in the injector for the Dubna 10 GeV synchrotron. KRION-2 has improved vacuum of less than 10^{-12} torr, magnetic field of 2.5 T and an electron energy of 7 KeV. It has produced nitrogen beams with 25% N^{7+}.

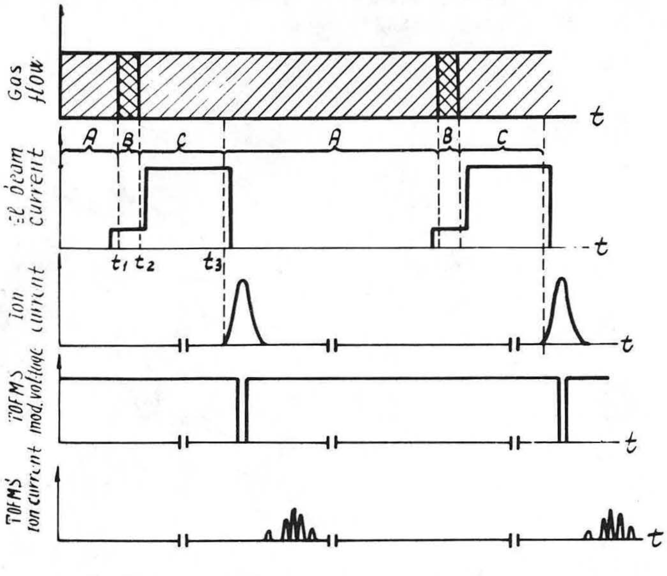

Fig. 14. Time sequence of injection (t_1-t_2), ionization (t_2-t_3) and extraction ($>t_3$) for EBIS source KRION-1 (Donets).

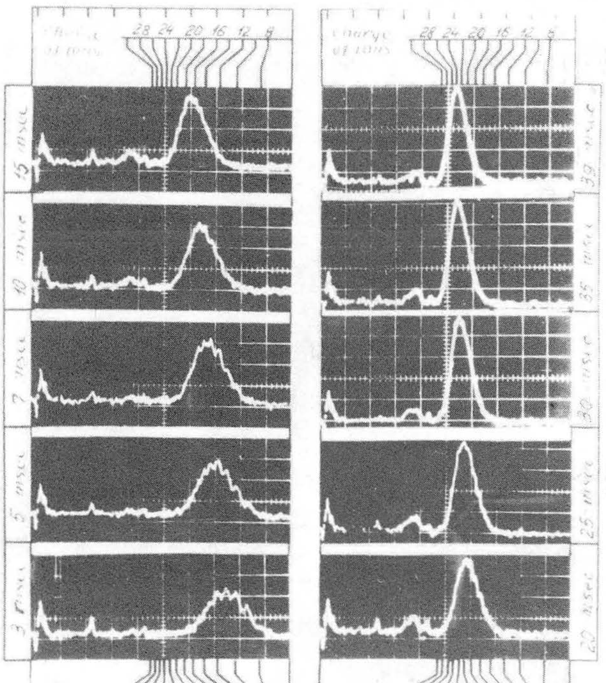

Fig. 15. Time evolution of xenon charge state spectrum during ionization time in EBIS source KRION-1 (Donets).

Arianer described the Orsay EBIS source, SILFEC, which has operated since 1971. The highest charge states observed are Ne^{10+}, Ar^{14+} and Xe^{21+}. Studies are underway on a superconducting design, CRYEBIS, for injection of fully stripped ions up to neon into the rebuilt Saturne II synchrotron. The design goals are a basic vacuum of 10^{-9} torr, electron current density 1000 A/cm^2, and ion currents of 10^{10}/pulse. To get these high electron current densities an external gun must be used with magnetic compression. An example of this type of gun is shown in Fig. 16.

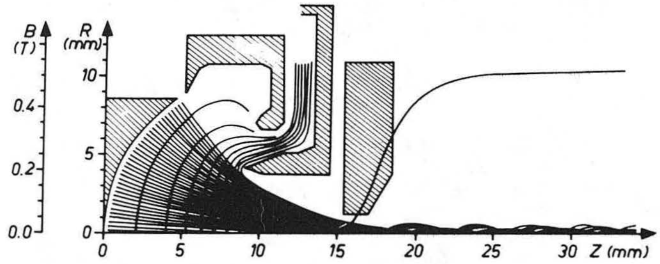

Fig. 16. Calculated electron trajectories in an external gun using magnetic compression, Orsay. (Arianer and Goldstein).

The group at Texas A & M of Hamm, Choate and Kenefick is building an EBIS for injection into a cyclotron. They are using an external electron gun with magnetic compression. The goal is to make beams of C^{6+}, Ar^{12+} and Xe^{25+} with fast repetition rate pulsing, since the cyclotron operates continuously.

At Frankfurt, the group of Becker and Klein are developing an EBIS source with continuous output. Here the ions drift through the electron beam in one pass and are ionized during their time-of-flight. Hence the system is called TOFEBIS. The principle of the source is shown in Fig. 17. The operation is similar to the

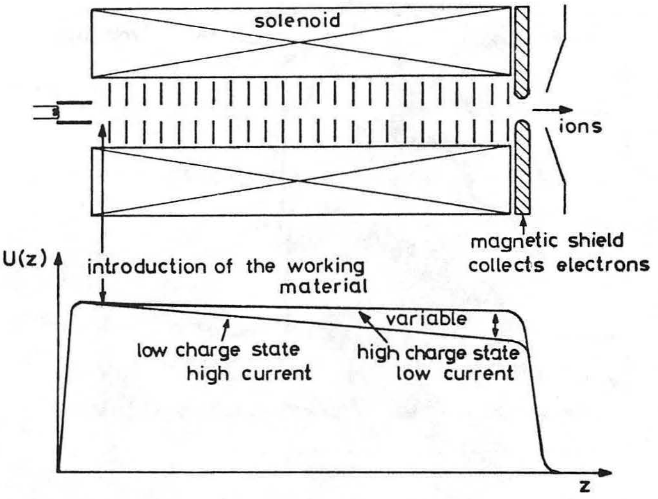

Fig. 17. Principle of TOFEBIS type of EBIS source being developed at Frankfurt. (Kleinod, Becker, Klein and Schmidt).

EBIS except that there is no trapping of ions, but a continuous drift from injection to extraction. Two versions have been built: one with an internal electron gun as in Fig. 17, and another with an external gun using magnetic compression, and extraction through the gun cathode. The charge state distribution is about the same as that of a PIG. The goal is to make 10^{13} part/sec of U^{11+} for the UNILAC.

Another continuous EBIS has been built at Giessen by Clausnitzer, Klinger, Müller and Salzborn. It has charge state distributions similar to that of a PIG, with zenon charge states up to Xe^{10+} observed. Currents are 1 nA - 1μA. It has been used for 2 years now on atomic physics experiments.

Other types of sources reported include an rf quadrupole trap developed at IEF, Orsay. Ions are stored for minutes and the first few charge states of argon are observed. From Yale laser-initiated vacuum arcs were reported. Large rates of mass loss were observed, but no charge state distributions were measured.

Negative Ion Sources

Negative ion sources use one of two principles of operation: conventional positive ion sources followed by charge exchange canals, or modified positive ion sources with reversed polarity for direct extraction of negative ions. Recent developments have used direct extraction. As Middleton points out in his review paper great advances in negative ion technology have been made in the last 5 years. The most important improvement has been the use of cesium in the sputtering of the feed material, either as a positive ion sputtering beam or as a coating on the feed material, or both. The papers were mainly directed to this area of development. This type of source makes high intensity beams and can be built with a set of cones of different materials in a wheel which can be quickly rotated to change ions. The principal application of negative ion sources is on tandem electrostatic accelerators.

The principle of operation of one of Middleton's sources is shown in Fig. 18. The cesium ion beam comes from a tungsten surface ionizer. The beam is accelerated to 20-30 keV and strikes a hollow cone containing the feed material. Negative ions come out the other side through a hole in the center of the cone and are accelerated through 20-30 keV back to ground potential. The wheel contains 18 cones which can be rotated into the beam in a few seconds. A gas inlet allows negative ions to be produced from gases, usually with a titanium cone. The output for various ions is a few μA of Li^- and B^-, and 10's of μA of H^-, C^-, O^-, Si^-, and S^-.

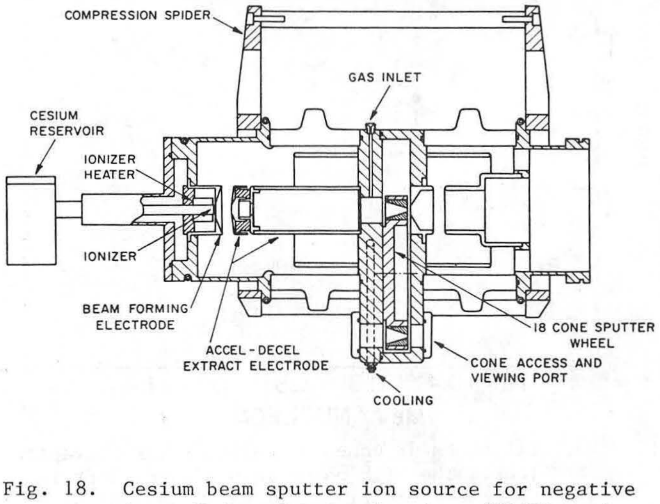

Fig. 18. Cesium beam sputter ion source for negative ions, Univ. of Pennsylvania. (Middleton).

Fig. 19 is a graph shown by Smith of Wisconsin illustrating the general trend of increasing output of beam current with electron affinity for several sputter sources.

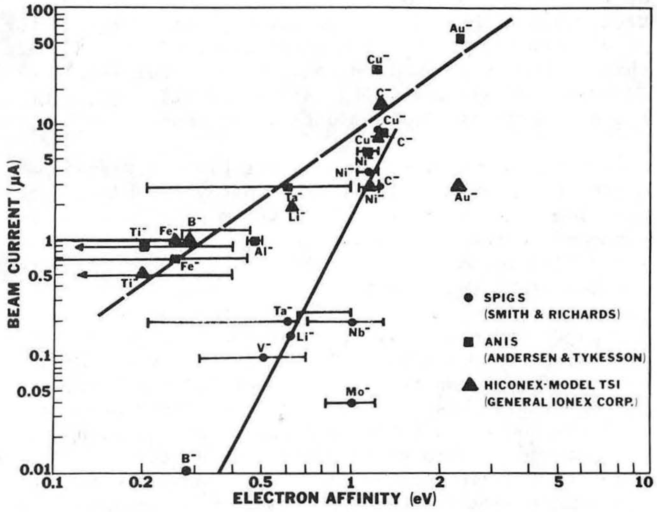

Fig. 19. Data from several negative ion sputter sources showing the increase of output with electron affinity. (Smith).

Chapman of Florida State described an inverted sputter source. This is a variation of the Middleton source in which the negative beam is extracted back through the ionizer rather than through the sputter cone. The idea was based on the observation that the ionizer was being bombarded by some negative ions concentrated in a small spot. So by optimizing this effect Chapman has designed a compact source having good beam quality and lifetime. The "final" version is shown in Fig. 20.

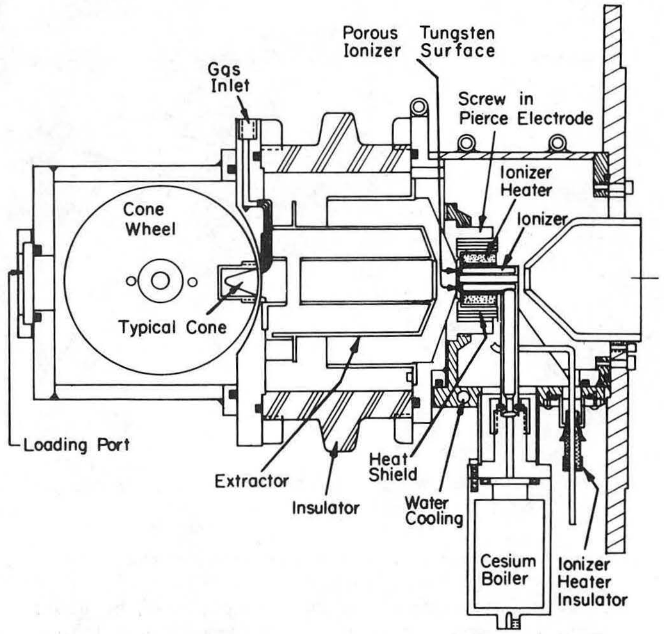

Fig. 20. Inverted negative ion sputter source of Florida State. Beam exits to right. (Chapman).

Other papers on negative ions described beam measurements on the Aarhus ANIS source, studies of the Wisconsin SPIGS source, a modified Hortig source at ORNL, a duoplasmatron at ANL, a charge exchange He$^-$ source in Argentina, and a polarized Li$^-$ source at Hamburg in an invited paper by Steffens.

Beam Formation and Emittance Measurements

A comprehensive review of beam formation and space charge neutralization was given by Green of Culham. He described the various analytical and computational treatments of beam extraction from plasmas by a number of electrode systems. Intensity limitations and space charge effects were discussed. Many useful simple formulas are given to help understand this important field of getting the beam out of the source.

Hyder of Oxford told us about his well developed system to measure emittance and energy spread of negative ion sources. A two slit system is used for emittance measurement, with a stepping motor to scan the first slit followed by a deflection magnet to scan the beam across a second slit into a Faraday cup. A computer processes the data and gives a scope or plot display. The energy spread measurement is made with a retarding field energy analyzer. Measurements have been made on beams from a number of different negative ion sources. This gives a valid comparison of beam quality, and helps in understanding the relation between source construction and beam quality. I understand that Hyder is even willing to measure positive ion source beams, after appropriate negotiations have been made. Some discussion after the paper indicated that it would be a good idea when quoting emittance areas to state the π explicitly, e.g. 10 π mm mrad $\sqrt{\text{MeV}}$, so we all know where it is.

Stripping

A review of stripping of heavy ions in foils and gases was given by Moak of Daresbury and ORNL. He discussed experimental measurements of charge state distributions, and dependence of the distribution upon stripper density, shell effects, and molecular weight of gas strippers. The data for the average charge of bromine ions in various gases and solids is shown in Fig. 21. Some interesting work has been done at Oak Ridge showing that the average charge of the ion can be increased by more than a factor 2 over the equilibrium value when the ion is scattered by about 1 degree in a gas stripper at low pressures. This effect may be useful in tandem accelerator strippers. Moak discusses the interesting unanswered question of which theory explains the difference in average charge produced by solid and gas strippers. In another paper some measurements on angular and energy spread due to stripping are reported by the GANIL group. The Frankfurt group described a high density gas jet stripper.

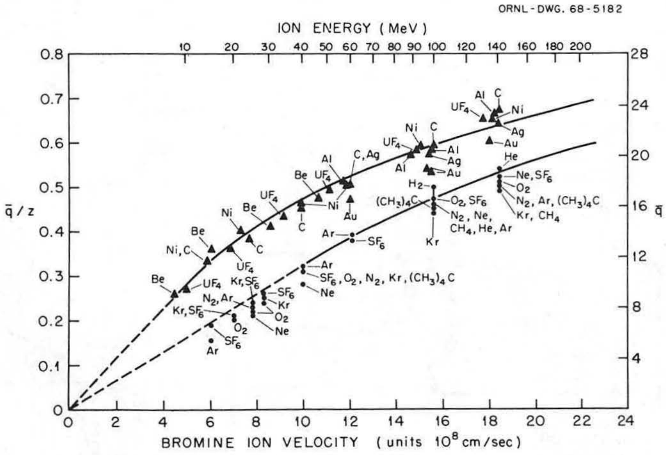

Fig. 21. Average charge of bromine ions in gases and solids vs. energy. (Moak).

Yntema presented studies on lifetimes of carbon foils in heavy ion beams. Since foil strippers give higher charge states than gases, they give higher energy beams when used in tandem accelerators. But short foil lifetime in high intensity beams is a basic disadvantage. A foil exposed to a beam becomes wrinkled after a period of bombardment. It then becomes stretched and tears as shown in Fig. 22. Yntema has compiled data on lifetime of carbon foils from many heavy ion accelerators. This is shown in Fig. 23. There is a consistent increase of lifetime times

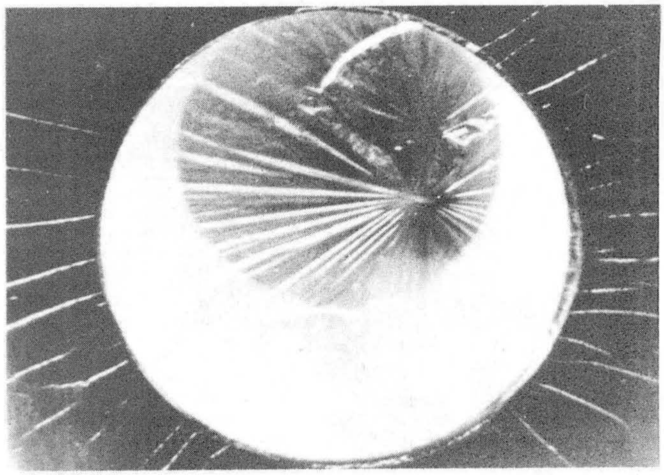

Fig. 22. Foil in heavy ion beam of tandem accelerator at Munich. (Yntema).

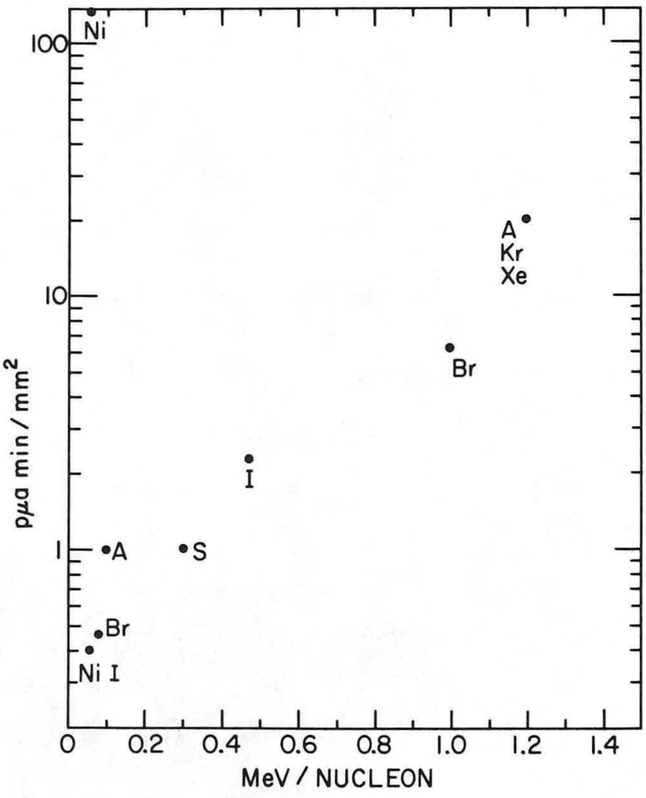

Fig. 23. Lifetimes of unheated carbon foils at various labs. The high point in the upper left is a heated oscillating foil in a 4 MeV Ni beam at Argonne. (Yntema).

beam density with increasing energy/nucleon. The very high Argonne point is the result of heating the foil to 400-500° C and oscillating the foil in the beam. Oscillating the foil helps to reduce the gradual thickening, which is caused by some combination of cracking of hydrocarbons and structural changes in the foil material.

Accelerators and Experiments

A review was given of positive heavy ion accelerator projects by Grunder of Berkeley. He summarized the new machines being completed or studied. Comparisons were given of the performances of various accelerator combinations. An example of a comprehensive group of heavy ion accelerators is at Berkeley, where the SuperHILAC is designed to accelerate all ions to 8.5 MeV/A (ions up to xenon are used at present). It injects the Bevatron on a timeshare basis for further acceleration to 2 GeV/nucleon. This "Bevalac" facility has been operating for over a year, Fig. 24. Also at LBL the 88-Inch Cyclotron accelerates lighter ions to 10-35 MeV/nucleon. Grunder showed interesting rough estimates of the performance of accelerators using a conventional PIG source and the new EBIS source. Fig. 25 shows the output of a high duty cycle heavy ion linac assuming stripping at an appropriate energy (SuperHILAC or UNILAC). The PIG source is superior to the EBIS for this application. On the other hand for synchrotron injection the pulsed output of the EBIS matches the time acceptance of synchrotron very well, so the EBIS is much superior to a PIG for this case, as shown in Fig. 26.

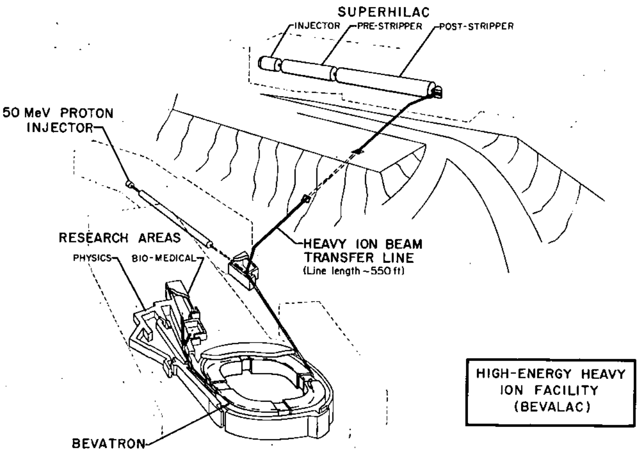

CBB 729-4520

Fig. 24. The LBL Bevalac facility connecting the SuperHILAC and Bevatron. (LBL).

Large tandem accelerators were reviewed by Jones of Oak Ridge. He discussed the many projects around the world which are planned or under construction. One of the most interesting is the Oak Ridge 25 MV folded tandem now under construction, shown in a schematic layout in Fig. 27. The energy is higher than that of any existing tandem and the folded construction has not been used on large tandems before, so this will be a unique accelerator. I'm sure we all wish our Oak Ridge hosts success with this project.

There were reports on the heavy ion performance of the new Louvain cyclotron, and on the heavy ion linac project at IPCR, Japan.

In conclusion Stelson of Oak Ridge presented us with a view of experiments to be done with heavy ions. Some of the paths to be explored in the fields of nuclear, atomic, and solid state physics can be predicted from present work while others must await the future in which we can explore more of the mass-energy-intensity space which the new accelerators will open up.

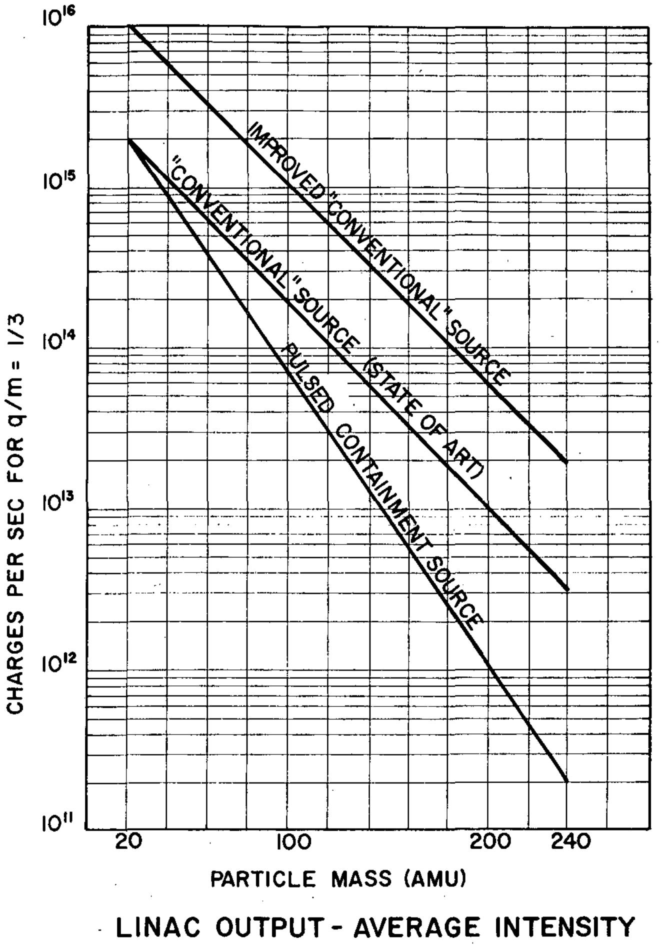

XBL 7510-8843

Fig. 25. Output of high duty cycle heavy ion linac, assuming appropriate stripping. (Grunder).

Future Prospects

What can we expect in the next few years in the heavy ion source field? In charge exchange and impact cross-sections we can expect many more measurements using heavy ion sources in test facilities. In positive ion sources we can expect EBIS sources to be injecting accelerators at Dubna, Texas A & M and Orsay. Better electron guns will come into operation using magnetic compression. In ECR sources, higher frequency microwaves will produce higher density plasma and higher charge states. More improvements will be made on negative ion sputter sources. New heavy ion accelerators will come into operation such as UNILAC, the ORNL tandem and GANIL. New unexpected experimental results will appear. Finally another heavy ion conference as pleasant as this one will take place, in less than four years, in Europe.

Acknowledgements

I would like to thank the speakers who lent slides and viewgraphs for my talk, and whose figures I used for this paper.

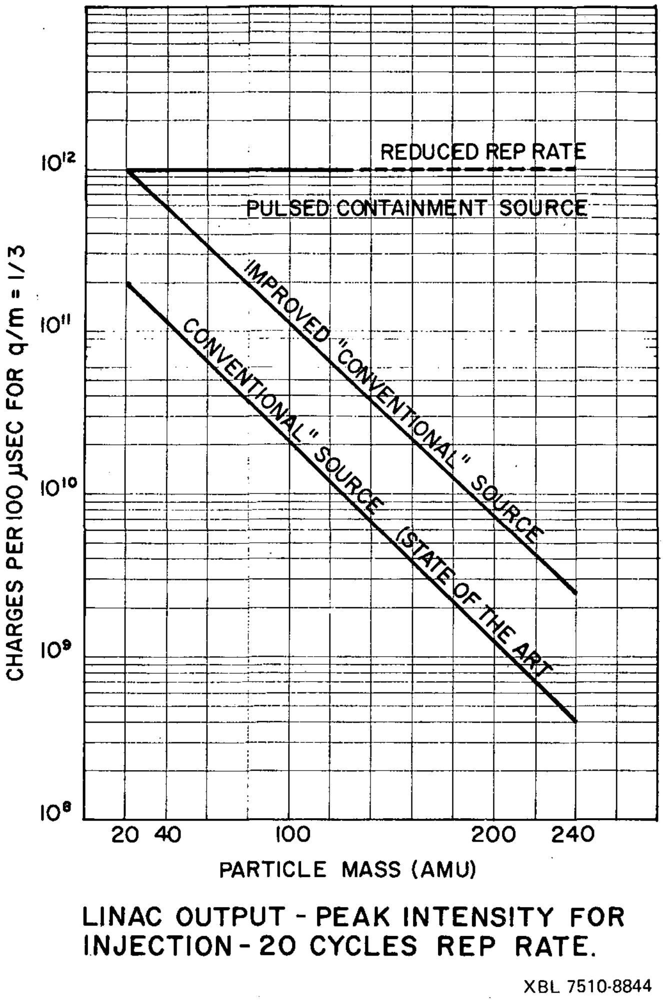

Fig. 26. Output of heavy ion linac injector for a synchrotron. (Grunder).

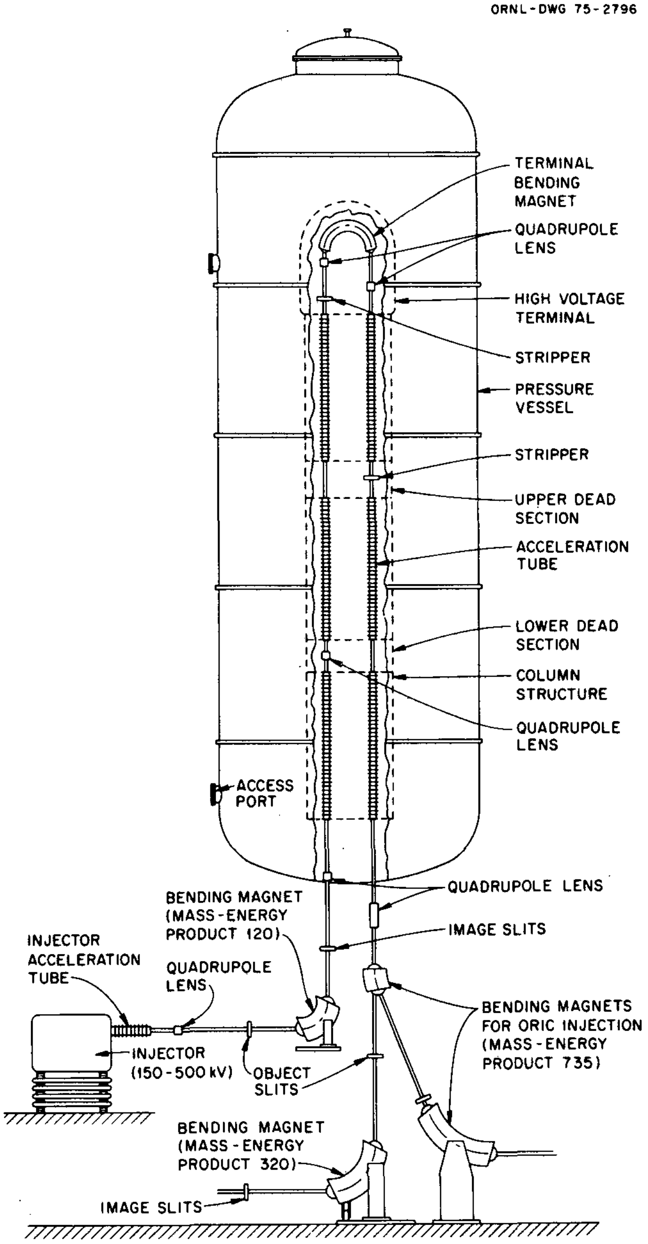

Fig. 27. Oak Ridge 25 MV folded tandem electrostatic accelerator system now under construction. (Jones).

References

1. J.R.J. Bennett, IEEE Trans. Nucl. Sci. NS-19, 2, p. 48 (1972).

2. H. Winter and B. H. Wolf, Proc. 2nd Symp. on Ion Sources and Formation of Ion Beams, Berkeley, Calif., 22-25 Oct. 1974: LBL-3399, p. V-1.

TECHNICAL INFORMATION DIVISION
LAWRENCE BERKELEY LABORATORY
UNIVERSITY OF CALIFORNIA
BERKELEY, CALIFORNIA 94720