UCLA
Contemporary Music Score Collection

Title
Mineral

Permalink
https://escholarship.org/uc/item/2ht7n0t2

Author
Naranjo, Iván

Publication Date
2020

Copyright Information
This work is made available under the terms of a Creative Commons Attribution-NonCommercial License, availalbe at https://creativecommons.org/licenses/by-nc/4.0/

eScholarship.org Powered by the California Digital Library
University of California

Mineral

written for Retro Disco

Iván Naranjo

2017

Mineral

performance notes and techniques 1

general remarks

SCORE: There is no general score, but three separate parts. The only moment of precise coordination is the beginning (all three instruments coordinate to begin in synchrony). After that moment, they naturally diverge and follow their own tempi and meter. However, all parts are calculated to last roughly the same, around five minutes.
The three musicians should make an effort to indvidually maintain the indicated tempo changes as accurately as possible, without using a click track or chronometer.
Each musician will end their part without caring about the temporal relation to the other two parts, but during rehearsals, it is important to try to achieve a similar global duration. The endings should occur very close to each other. Small differences from one realization to another, are expected.

SPATIAL DISPOSITION:

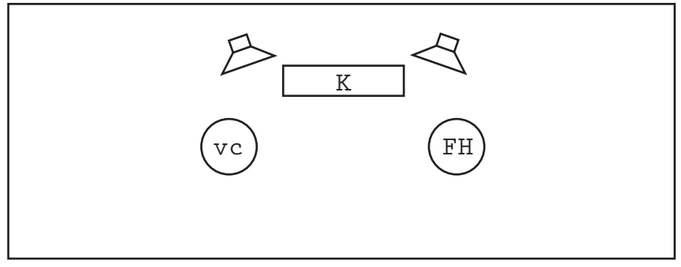

The Keyboard requires stereo amplification, and it should be located close to the instrument, so that the sound radiates from roughly the same location.

GENERAL STAFF DESIGN AND NOTATION

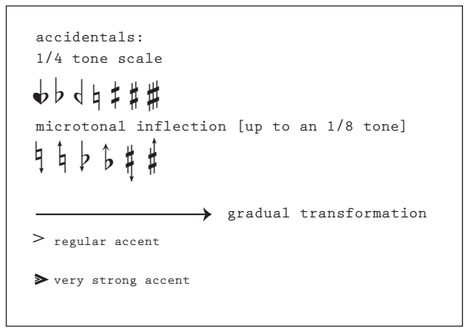

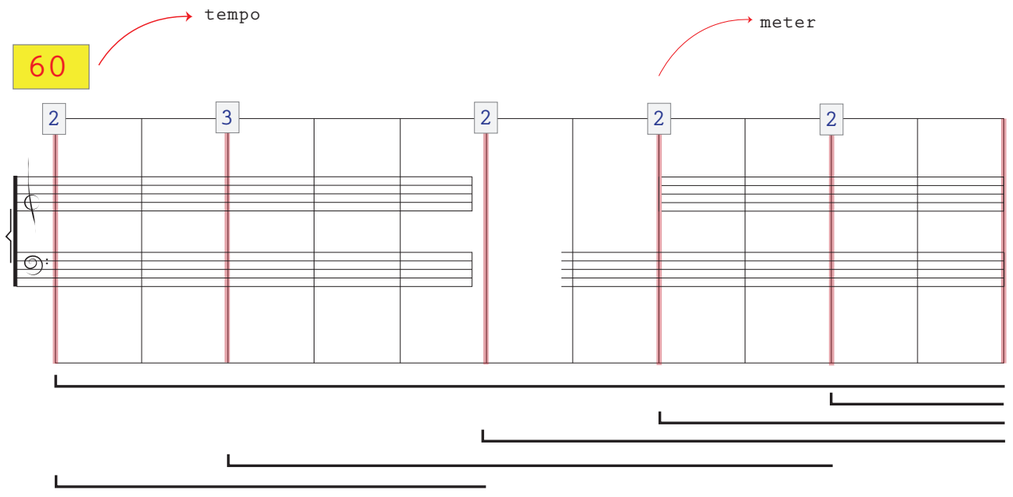

Segmentation and iteration

Segmentation lines appear in some systems, They should be played in descending order and all of them should be played. In this case, the system is first played in its entirety, and then the last measure, followed by the two last measures, and so on. Tempo may vary, but not drastically, in each iteration.

Mineral

performance notes and techniques 2

KEYBOARD

An 88 keys midi keyboard is required. A sound recording is assigned to each of the keys. They have to be mapped so that the first sound, labelled “000_longNoise” corresponds to the lowest key (A0), and ascending all the way to the sound labelled “087_sweep”, which corresponds to the highest key (C7).

The sounds are related to sound events in the other two instruments. They consist of sound recordings and synthesized sounds. Their duration is in most cases very short, but there are a few exceptions. The sounds mapped to the two lowest keys, for example, are quite long; the longest is assigned to the Bb0 Key, and it lasts 46 seconds.

The playing dynamic (finger pressure) should be always around mf, no dynamics are written, only two different kinds of accents. The samples already present different dynamic shapes.

It is not necessary to sustain the key for the whole duration of the sound, The key will only trigger and provide a dynamic variation, but it will not have any other effect on the sound samples. They will always last until its ending.

A volume pedal might be used to slightly adjust the global balance, in real time.

FRENCH HORN

Transposed in the score.

MUTE SOUND WITH HAND
written as a separate layer, most of the time
continuously changing the degree of obstruction between three main categories:

- Completely open.
- Partially closed, many degrees of obstruction can be used, as libitum, when this symbol appears.
- Completely closed with the hand. The resulting pitch is different from the notated one.

STAFF

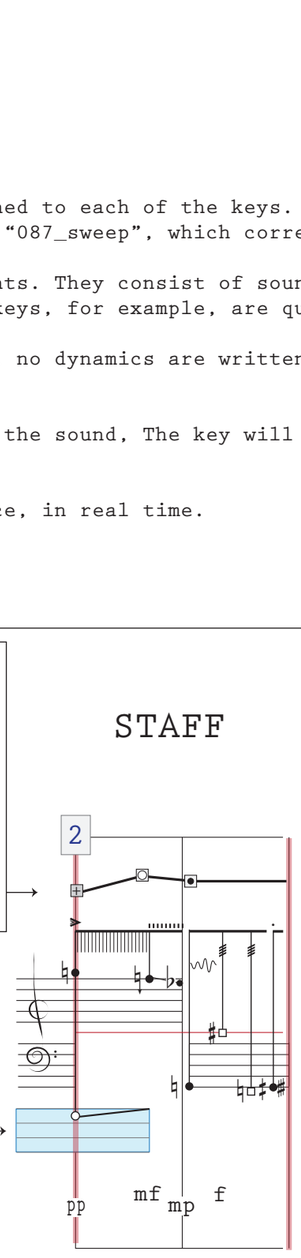

Middle C [red line]

VOICE STAFF

The pitches are not precisely defined, rather, the position of the notehead on the staff is to be read proportionally. The staff covers the vocal range of the performer.
More than a separate line, the voice should blend with the overall timbre.

NOTEHEADS

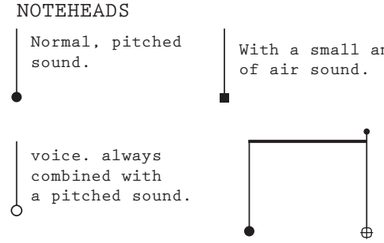

- Normal, pitched sound.
- With a small amount of air sound.
- Mostly air, close to noise, with a slight presence of pitch.
- tongue slap
- voice. always combined with a pitched sound.
- stop sound suddenly with a tongue stop

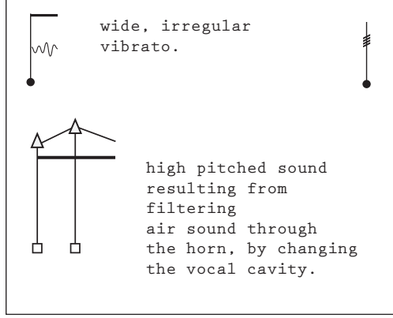

- wide, irregular vibrato.
- flutter tongue
- fast double articulation (t-k-t-k-t)
- high pitched sound resulting from filtering air sound through the horn, by changing the vocal cavity.
- soft internal articulation with diafragm or throat
- ñ unpitched vocal sound through the horn. Using an “ñ” (gn) sound. This is produced by gently striking the palate with the central part of the tongue.

Mineral

performance notes and techniques 3

VIOLONCELLO

noteheads:

normal finger pressure

'harmonic' finger pressure:
not necessarily on a natural harmonic node

all low beamed notes are to be executed with only the left hand: a square note indicates that the attack of the fingering should be accentuated and audible.

mute the indicated strings with the palm of the hand

bow location:

mst: around one third of the string.

st: above the beginning of the fingerboard

ord

sp: halfway between the bridge and ord.

xsp: right next to the top of the bridge

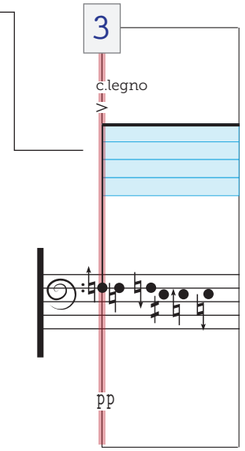

other bowing techniques:

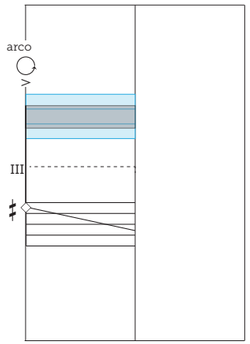

circular bowing: the space occuppied by the grey rectangle determines the duration and size of the circular motion.
In this case, a full circle should be described, however, in some instances, only a partial circle appears, suggestiong the description of only part of the circular motion.

very fast and small sized jeté.

vertical [bridge to fingerboard] motion. without tip to frog motion. Scratch with full contact with the string, producng a scratchy sound.

multiphonic sound resulting from the combination of bow pressure/speed and a harmonic pressure fingering in between nodes.

Mineral

Samples and mapping to midi Keyboard

key pitch	midi Value	sound	dur	
A0	21	long noise	10”	
A♯0	22	multilayered multiple materials	46”	
B0	23	loud breathing	1.2”	
C1	24	C2 [multiphonic]	5”	
C♯1	25	electric insect	0.75”	
D1	26	bassdrum buzz	0.1”	
D♯1	27	soda can	0.2”	
E1	28	pipe sound [D3]	0.5”	
F1	29	tuba [C♯1]	2.1”	
F♯1	30	high buzz	0.6”	
G1	31	[G3+1/8, Bb3+1/8]	4.0”	
G♯1	32	snare breath	2.5”	
A1	33	saxSlap [Bb 1]	0.6”	
A♯1	34	metal friction	0.6”	
B1	35	Flute Slap	0.15”	
C2	36	[C3 1/8 sharp]	1”	
C♯2	37	[C♯3+1/4]	1”	
D2	38	[D3]	1.8”	
D♯2	39	[D♯3]	1.5”	
E2	40	[D3+1/4, E3+3/8, Bb3]	3”	
F2	41	Noise [D♯3+1/8]	3”	
F♯2	42	[D♯3+1/4, E3]	3.6”	
G2	43	Noise[D♯3+3/8]	1”	
G♯2	44	[E3+1/8]	1.5”	
A2	45	[E3+3/8]short percussive	0.4”	
A♯2	46	drum noise	0.1”	
B2	47	snare rim	0.1”	
C3	48	vynil needle noise	0.5”	
C♯3	49	noise reverse	0.5”	
D3	50	nail clipper	0.1”	
D♯3	51	dry fricative	0.1”	
E3	52	insects	0.5”	
F3	53	F3+1/4	0.5”	
F♯3	54	jete col legno	0.4”	
G3	55	[Bb3, B3] short, sequence	0.2”	
G♯3	56	[C4, C4+1/4] smooth	2”	
A3	57	[C4+3/8] short blip	0.3”	
A♯3	58	C♯4 short blip	0.3”	
B3	59	C♯4+1/8	0.7”	
C4	60	C♯4+1/4 short blip	0.5”	
C♯4	61	D4 smooth	0.6”	
D4	62	D4+1/4 short blip	0.4”	
D♯4	63	Eb4	0.7”	
E4	64	[E4, F♯4] rev	1”	

key note	midi Value	sound	dur	
F4	65	pitchy fly	0.3”	
F♯4	66	dry pop	0.1”	
G4	67	wood crack	0.4”	
G♯4	68	G♯+3/8. fast vib	2”	
A4	69	A4 slow vib	2”	
A♯4	70	[F5+1/4, D6], short, seq	0.2”	
B4	71	digital clip	0.1”	
C5	72	flute slap 2	0.1”	
C♯5	73	electric spark	0.2”	
D5	74	wood pop	0.1”	
D♯5	75	clip sound	0.1”	
E5	76	click 2	0.1”	
F5	77	deep and low	1”	
F♯5	78	bottle	0.5”	
G5	79	click 3	0.1”	
G♯5	80	low snare roll	0.8”	
A5	81	click 4	0.1”	
A♯5	82	Bb5+1/4	1.3”	
B5	83	E6+1/8 fast vib	2”	
C6	84	[E6+1/8, F6+1/4] in sequence	1.5”	
C♯6	85	F♯6+1/8 short	1”	
D6	86	F♯6 + 1/4	0.1”	
D♯6	87	F♯6 + 1/4 smooth	3”	
E6	88	F♯6 + 3/8 short	0.1”	
F6	89	[Bb6, G6 +1/8, E6] very short in seq	0.5”	
F♯6	90	[G6+1/4, A6+1/8] short	0.2”	
G6	91	[G6+3/8, G♯6+1/4]	2”	
G♯6	92	G♯6+1/8 fast vib	1.5”	
A6	93	Hi Hat + bass drum	0.1”	
A♯6	94	flute_aeolic_low	0.6”	
B6	95	comb filtered noise	0.3”	
C7	96	babbling	0.3”	
C♯7	97	analog noise	0.2”	
D7	98	[D7, E7+1/4] in seq	1.8”	
D♯7	99	jete harmonics	0.5”	
E7	100	snare soft roll	0.3”	
F7	101	G6+1/8 fast vib	1.3”	
F♯7	102	G7+1/4 short	0.1”	
G7	103	G7+3/8 short	0.4”	
G♯7	104	[G♯7+1/8. A7+1/8]	3.5”	
A7	105	G♯7+3/8 fast vib	2.5”	
A♯7	106	[G♯7+1/4, Bb7+1/4] fast vib. soft	1.4”	
B7	107	A7+1/8, fast vob	2.5”	
C7	108	short sweep	0.4”	

55

15

4 4 4 6

15

4 5 4 4 1

15

3 4 5 5

15

2 4 4 4 3

15 15 15

10” 5 3

8a 8a 8a 8a

4 5 3 5

8a 8a

4 3 5 5

8a

60

2 5 4 3 3

8a 8a 8a

2 3 2 2 3 5

8a

65

2 6 3 4 2

8a

~37”

8a

60

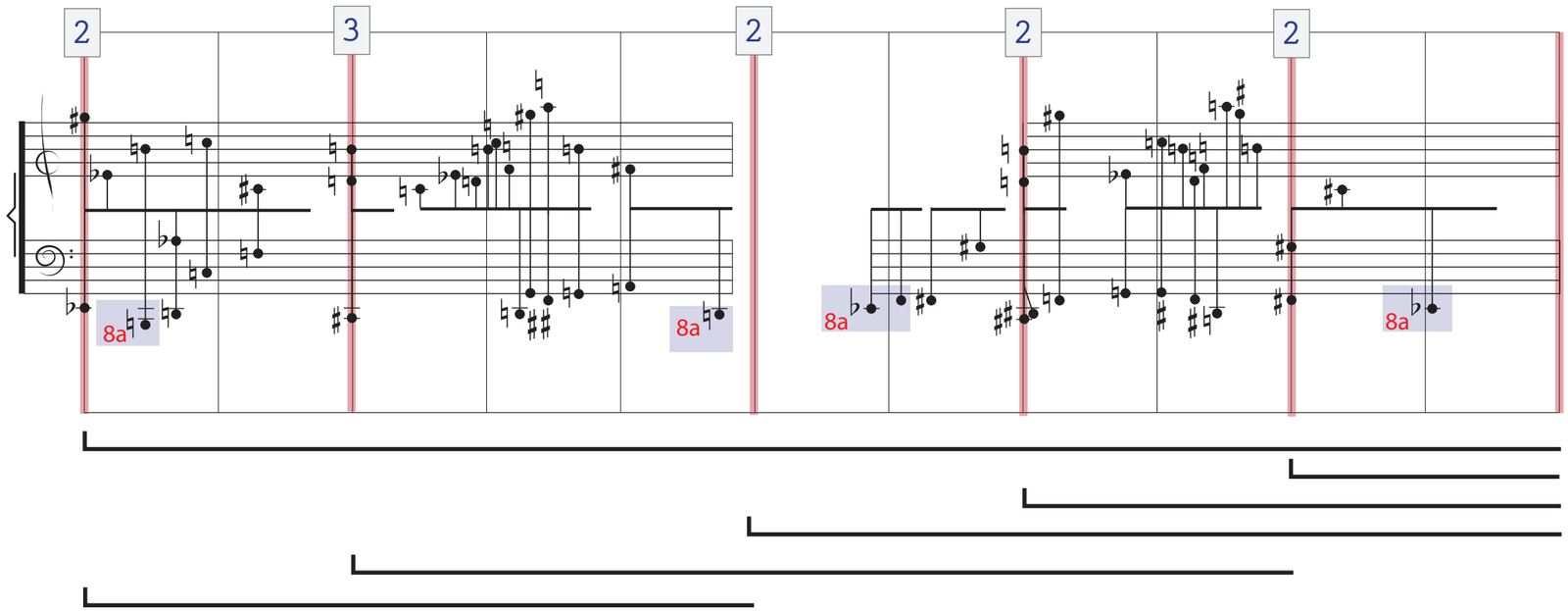

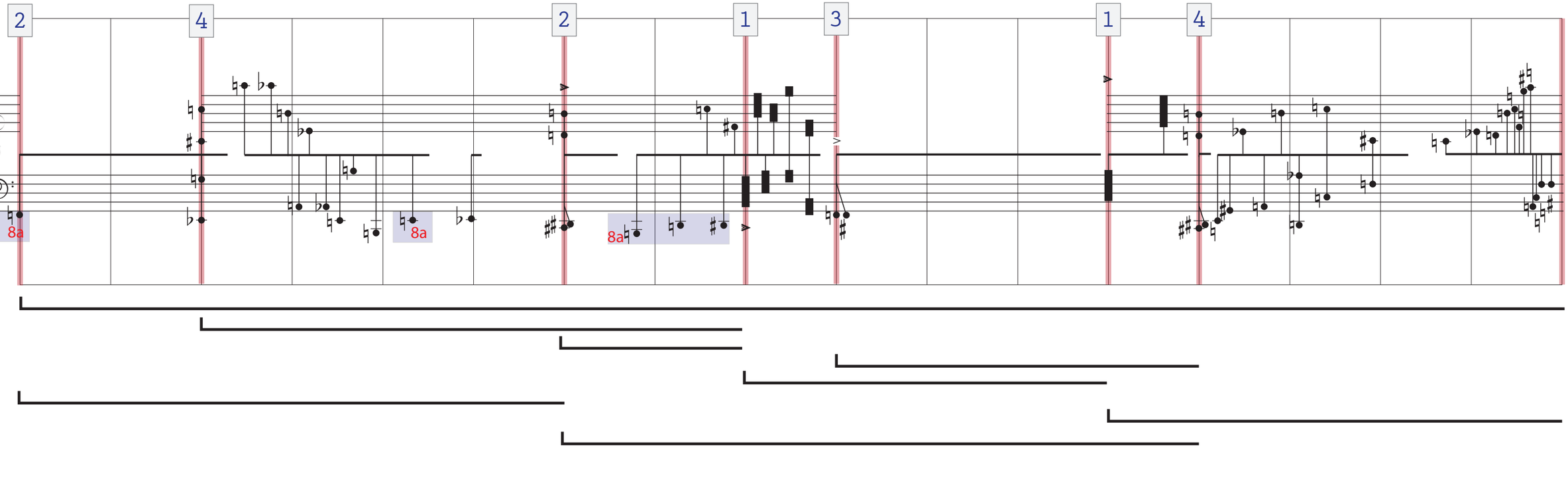

Ciudad de México, 2017

60

4 3 2 4 4

mp ppp/p f p mp mf ppp/f pp [f] ppp mp f mp ppp mp

3 3 4 3 3 1

[△] mf/p f p ppp mp p mp mf [f] mf p mf pppp mp

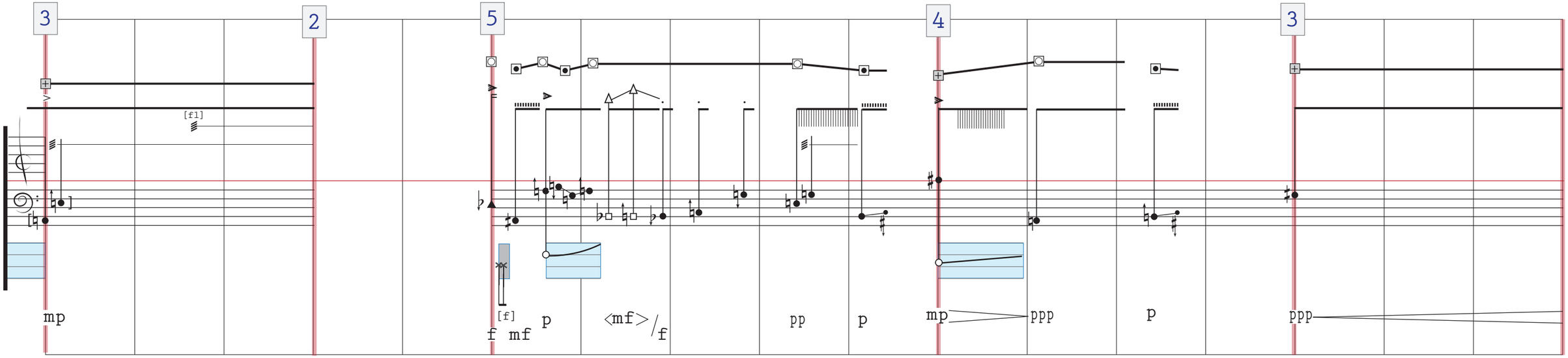
3
2
5
4
3
[fl]
mp
[f]
f
mf
p
<mf>/f
pp
p
mp
ppp
p
ppp

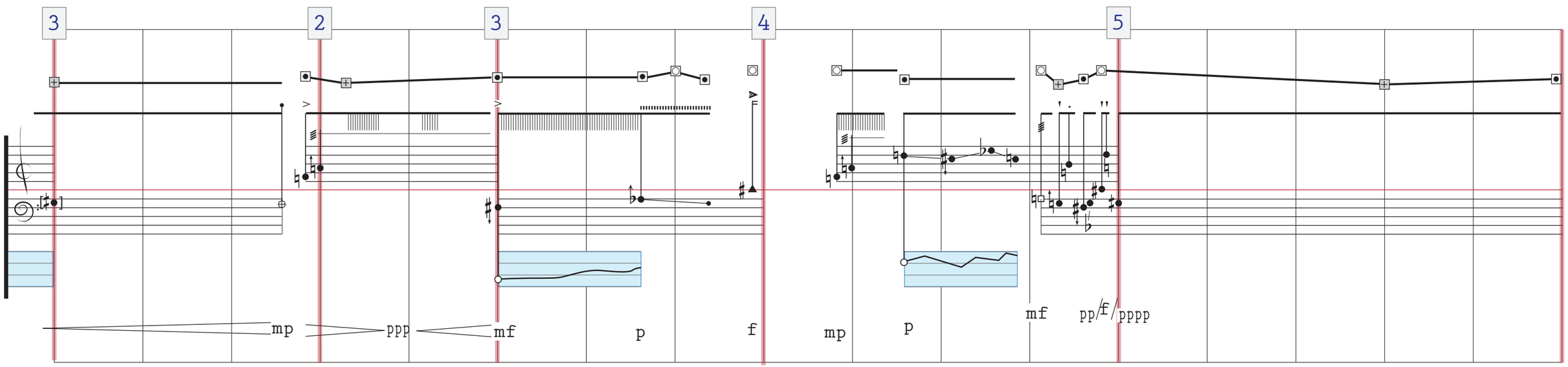
3
2
3
4
5
mp
ppp
mf
p
f
mp
p
mf
pp/f/pppp

1 5 3 2 4 2

[pppp] mf ppp mp pppp mf f mp f>p mp p f f mp

4 4 2 3 4

[] f p mp p f pp f/p mf p/f p>mf>mp pp mp> pp mf pp [f] [f]

50

1 4 3 2 1 2 3

pp mf f/mf pp f mf f mp<mf/pp mp/mf mp pp mf [f] mp mf/f mp [f1] f/mf p mf/p mf pp mf [f] f p

2 2 1 4 2 1

pp mf mp f f/pp mf/mp< mf f mf pp [f] f pp< mf/pp mp^f pp< mf f mf f pp< mf

65

1 4 1 3 4 3 1

ff f ff f p mf p p f pp mf/ppp p mf/pp mp f mp mf f ff mf

5 4 3 2 3

mf p ppp mf/pp mf f mf f p mf f ff mf f mf p pp mf

[f] [f]

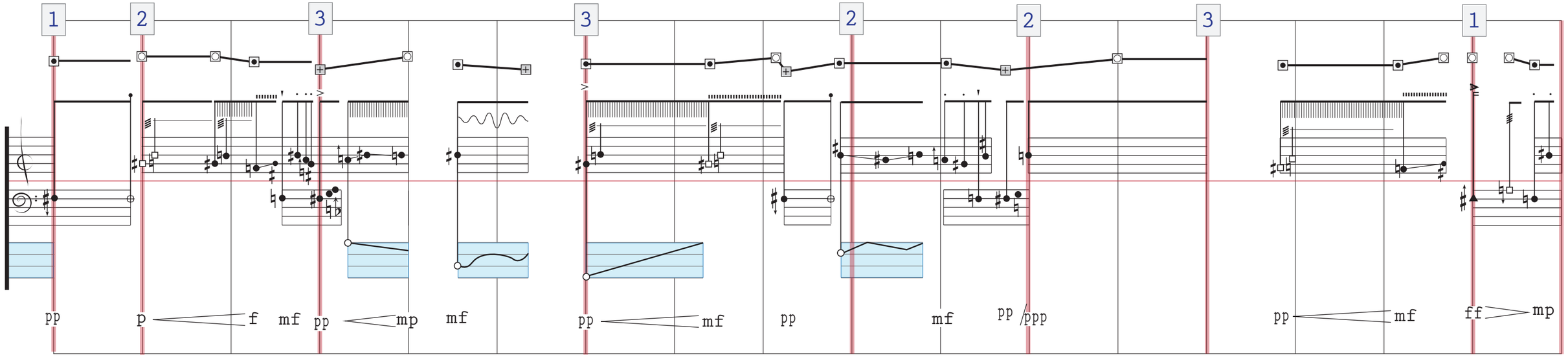
1
2
3
3
2
2
3
1
pp
p
f
mf
pp
mp
mf
pp
mf
pp
mf
pp
ppp
pp
mf
ff
mp

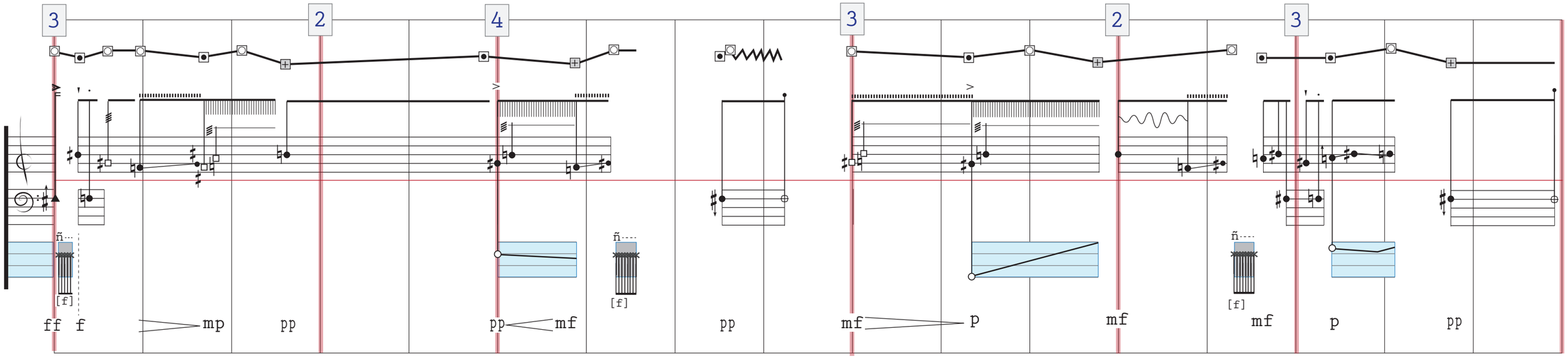
3
2
4
3
2
3
ñ
[f]
ñ
[f]
ñ
[f]
ff
f
mp
pp
pp
mf
pp
mf
p
mf
mf
p
pp

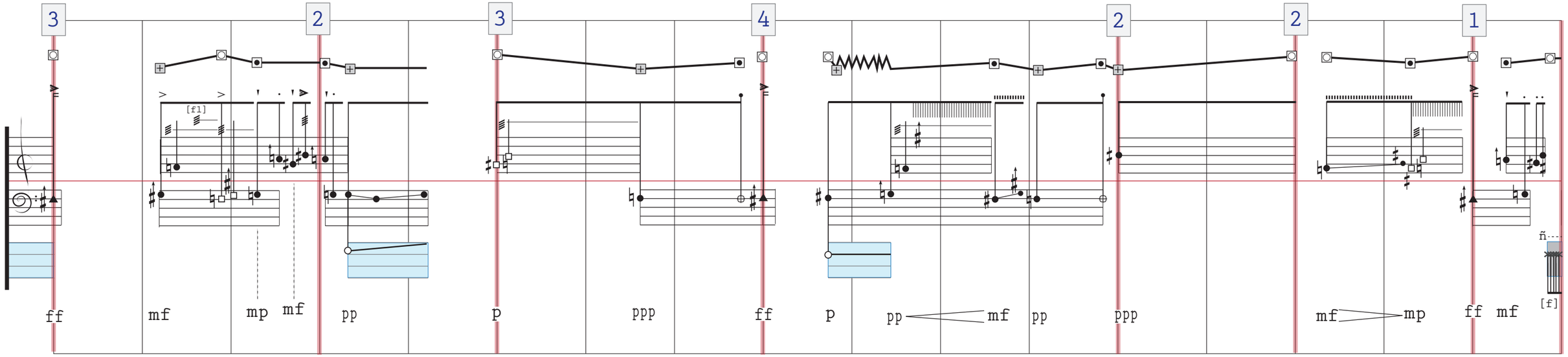

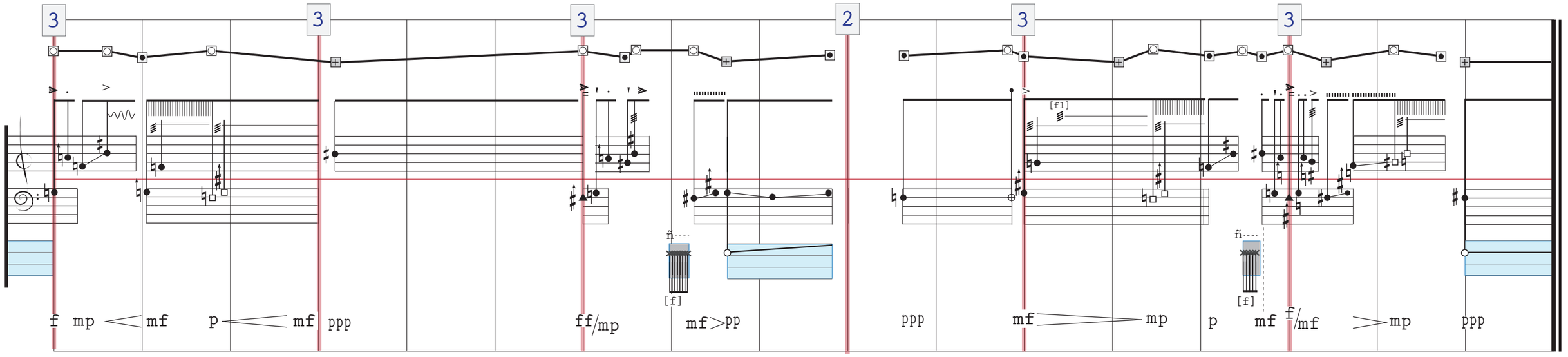

Ciudad de México, 2017

Mineral VIOLONCELLO

65

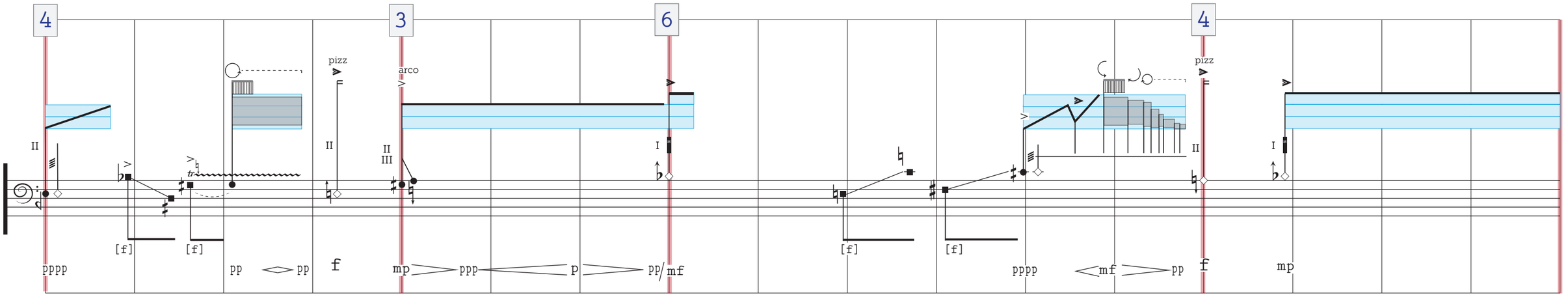

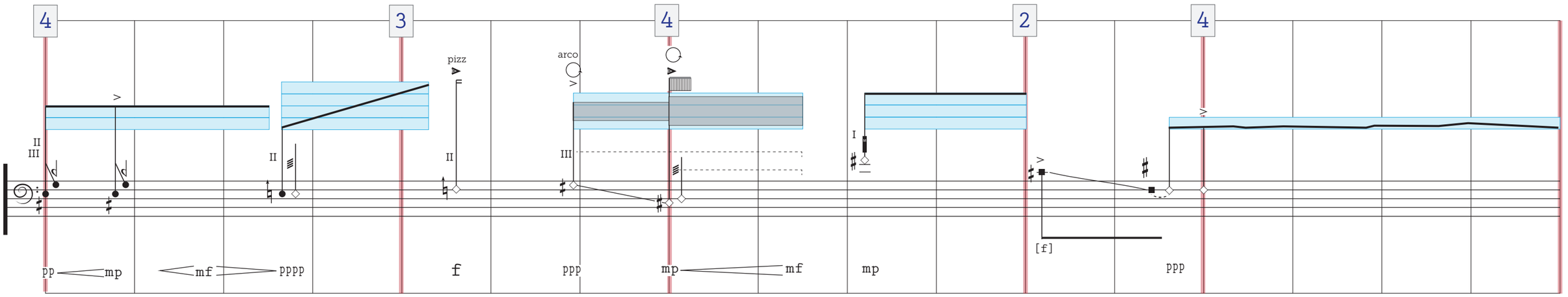

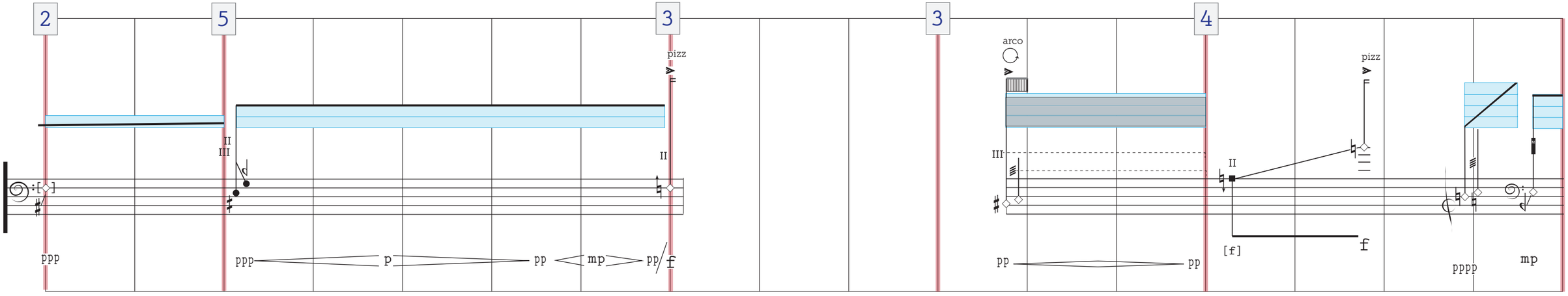
2
5
3
3
4
pizz
arco
pizz
II
III
II
III
II
ppp
ppp
p
pp
mp
pp
f
pp
pp
[f]
f
pppp
mp
4
3
3
3
3
1
pizz
[crine]
c.legno
II
II
III
I
II
II
II
[f]
mp
mp
mf
pppp
mf/pppp
ff
pppp
mp
[f]
pppp
mf/p

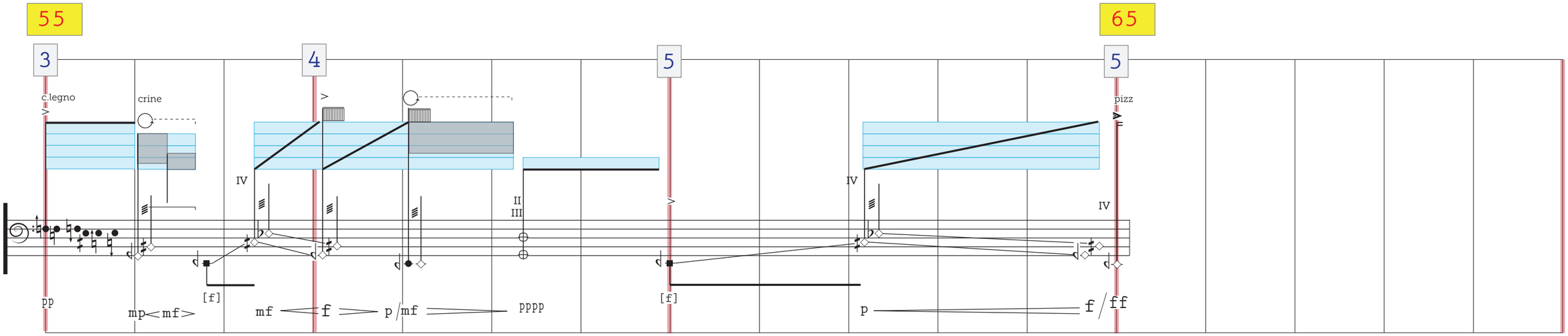
55
65
3
4
5
5
c.legno
crine
pizz
IV
II
III
IV
IV
pp
mp
mf
[f]
mf
f
p
mf
pppp
[f]
p
f
ff
4
5
4
4
pizz
III
IV
ff
pppp
mf
pppp
mp

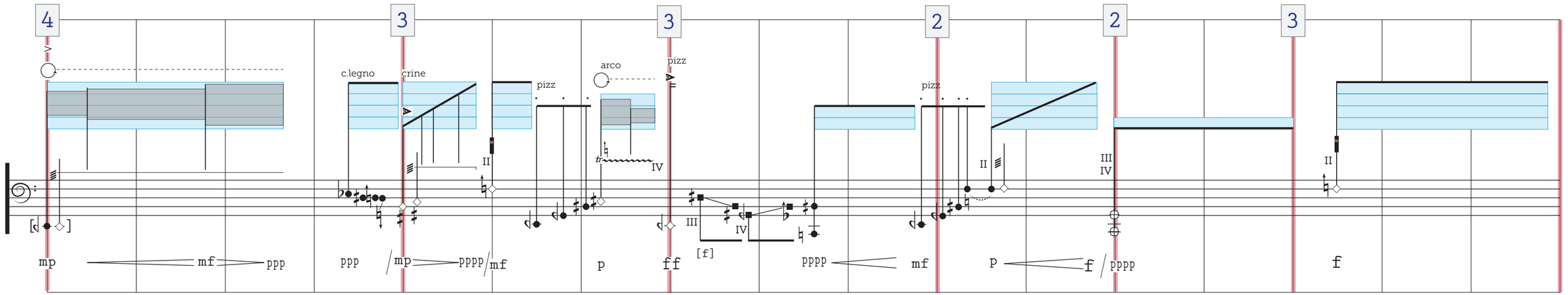
4
3
3
2
2
3
c.legno
crine
pizz
arco
pizz
pizz
II
IV
III
IV
III
IV
II
II
mp
mf
ppp
ppp
mp
pppp
mf
p
ff
[f]
pppp
mf
p
f
pppp
f

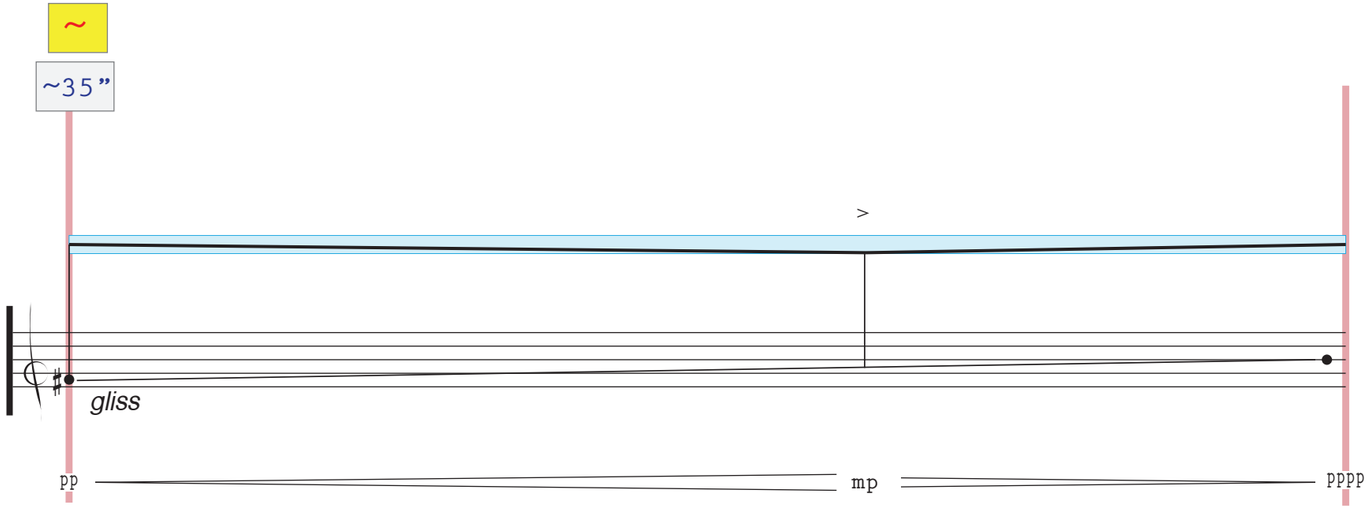
~
~35”
55
>
gliss
pp
mp
pppp

55

3 2 3 2 3 4

pizz arco pizz arco pizz

p [f] ff p mp p mf [f] mf mp pppp f pp mf mp mf pppp f p/mf [f] ff

3 2 2 1 2 3

pizz arco arco

p f pp ff mf f [f] mf mp pp [f] mp mf f ppp mp mf pp mf pppp

55

3 3 2 2 3 4

pizz arco pizz

II II

III

mp pp mf ff pp mf pp mf [f] ppp mf ppp mf f [f] pp mf pp f pp mf f

~

~15”

mp mf pppp

65

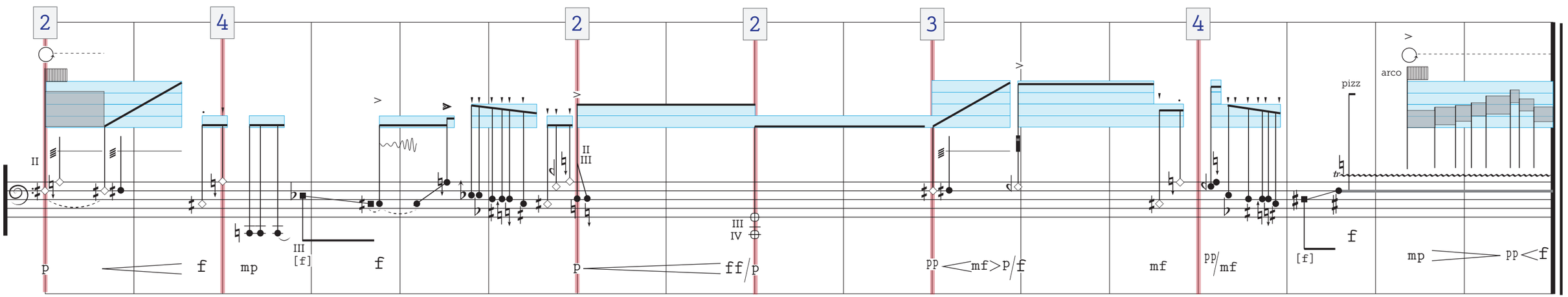

Ciudad de México, 2017