Lawrence Berkeley National Laboratory
Recent Work

Title
THE PRIMARY COSMIC-RAY RATIO Fe/(C+O) ABOVE SEVERAL GV/c

Permalink
https://escholarship.org/uc/item/2zs482fr

Author
Orth, Charles D.

Publication Date
1977-04-01

eScholarship.org Powered by the California Digital Library
University of California

Submitted to Physical Review Letters

LBL-6422
Preprint c. 1

THE PRIMARY COSMIC-RAY RATIO Fe/(C+O) ABOVE SEVERAL GV/c

Charles D. Orth, Andrew Buffington,
Terry S. Mast, and George F. Smoot

April 6, 1977

Prepared for the U. S. Energy Research and
Development Administration under Contract W-7405-ENG-48

For Reference

Not to be taken from this room

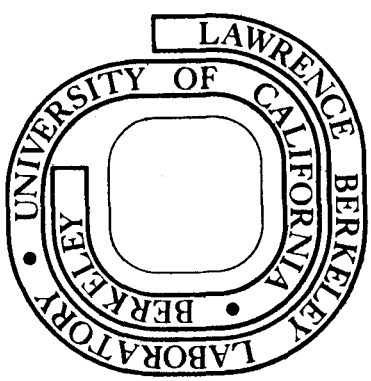

LBL-6422
c. 1

DISCLAIMER

This document was prepared as an account of work sponsored by the United States Government. While this document is believed to contain correct information, neither the United States Government nor any agency thereof, nor the Regents of the University of California, nor any of their employees, makes any warranty, express or implied, or assumes any legal responsibility for the accuracy, completeness, or usefulness of any information, apparatus, product, or process disclosed, or represents that its use would not infringe privately owned rights. Reference herein to any specific commercial product, process, or service by its trade name, trademark, manufacturer, or otherwise, does not necessarily constitute or imply its endorsement, recommendation, or favoring by the United States Government or any agency thereof, or the Regents of the University of California. The views and opinions of authors expressed herein do not necessarily state or reflect those of the United States Government or any agency thereof or the Regents of the University of California.

0 0 0 0 4 8 0 1 6 8 6

Submitted to The Physical Review Letters

THE PRIMARY COSMIC-RAY RATIO Fe/(C+O) ABOVE SEVERAL GV/c

Charles D. Orth, Andrew Buffington, Terry S. Mast and
George F. Smoot

Space Sciences Laboratory and Lawrence Berkeley Laboratory
University of California, Berkeley

ABSTRACT

We have observed a slight increase in the primary cosmic-ray Fe/(C+O) ratio above 10 GV/c, corresponding to a spectral index difference for Fe and C+O of 0.15 ± 0.07. These results are consistent with the propagation effects commonly assumed to explain the observed decrease in the (Li+Be+B+N)/(C+O) ratio. We find no evidence for separate source or acceleration mechanisms for Fe.

Subject headings: Cosmic rays --- composition and energy spectra, origin and propagation (94.40 Lx, 94.40 Cn)

The cosmic-ray ratio (Li+Be+B+N)/(C+O) has been observed to decrease by about a factor of two from 5 to 50 GeV/nucleon[1-5]. This phenomenon is usually interpreted as an indication that higher-energy cosmic rays traverse less interstellar material. Such primary cosmic rays as C and O would then fragment less at higher energies, producing fewer Li, Be, B, and N secondaries. The same change in interstellar pathlength would also affect the ratio of a heavy primary like Fe to a light primary like C because the heavy primary, with its shorter fragmentation mean free path, is more sensitive to changes in pathlength.

For this reason, several groups have measured the energy dependence of Fe/(C+O) ratios, where Fe refers to iron plus some neighboring elements, depending on the experiment.[1-3,6-9] These data are difficult to interpret, however, because no single experiment covers the entire energy range where the change in interstellar pathlength might be observed, and because systematic errors may vary from experiment to experiment. We report here a new measurement of the Fe/(C+O) ratio which covers the range from 2 to 100 GeV/nucleon with good statistics, high detection efficiency, and good background rejection. The ratio increases slightly with energy, in agreement with the interpretation of a decreasing interstellar pathlength.

Experimental interest in the Fe/(C+O) ratio began when Ormes and Balasubrahmanyan[6] reported a large increase from 4 to 40 GeV/nucleon. For a power-law description of the spectra for Fe and for C+O, $dN/dE \propto E^{-\gamma}$ where γ is the spectral index, the Ormes and Balasubrahmanyan result corresponds to a spectral index difference of $\Delta\gamma = 0.5$. This $\Delta\gamma$ would cause the Fe/(C+O) to increase by a factor of $100^{0.5} = 10$ for every factor of 100 increase in energy. An extension of this $\Delta\gamma$ to higher energies would result in the cosmic rays becoming predominantly iron nuclei above about

10^8 GeV/nucleon. Earlier interpretations of extensive air-shower data tended to support this hypothesis, but the current situation is controversial.[10] Additional interest in the Fe/(C+O) ratio arose when Ramaty, Balasubrahmanyan, and Ormes[11] interpreted the large $\Delta\gamma$ as evidence for either a different source or acceleration mechanism for iron.

A $\Delta\gamma$ as large as 0.5 can not be explained solely by propagation effects. If we assume that the cosmic rays traverse 4 ± 1 g/cm^2 of interstellar material at 5 GeV/nucleon, then the (Li+Be+B+N)/(C+O) data suggest that only half of this is traversed at 50 GeV/nucleon. Taking 3.0 and 6.4 g/cm^2 as the respective fragmentation mean free paths for destruction of Fe and C+O in 75% H + 25% He by mass, the exponential fragmentation probability yields Fe/(C+O) ratios of respectively 0.5 and 0.7 the source value near 5 and near 50 GeV/nucleon. The expected increase of the ratio in this energy range is hence 1.4 ± 0.1, and this corresponds to $\Delta\gamma = 0.15 \pm 0.03$. The small effect of C+O secondaries from heavier-element fragmentations[12] increases this $\Delta\gamma$ to 0.18 ± 0.05. The $\Delta\gamma$ should decrease for energies much higher than 50 GeV/nucleon, even if the (Li+Be+B+N)/(C+O) ratio continues to decrease, because the amount of interstellar material traversed would soon be sufficiently small that the Fe/(C+O) ratio would assume its source value.

Preliminary results of this experiment appeared in ref. 13. The apparatus consisted of a superconducting magnetic spectrometer with plastic scintillators and optical spark chambers (see fig. 1); a detailed description is given in ref. 14. The experiment was flown by balloon from Palestine, Texas to an altitude of 35.5 km in September 1972. With an exposure factor of 3×10^3 m^{2}sr sec, the apparatus recorded 3×10^4 events on film from Li through Fe (together with another 2×10^4 background

events that were removed later by scanning). The spark chamber coordinates for each of these were measured and reconstructed from the film plane to real space. A rigidity (momentum per charge) was determined by least-squares fitting a trajectory to the coordinates in the three spark chambers. The mean error in the charge per momentum (Z/p) was 0.02 $(GV/c)^{-1}$. The charge for each event was determined from the scintillator pulse heights after correction for spatial nonuniformities, track inclination, and electronics nonlinearities. Events which interacted in the spectrometer were eliminated through a chi-square and confidence-level test of the agreement among the pulse heights. About 88% of the good events passed all analysis requirements. The remainder is at the level expected from fragmentations and other interactions in the apparatus. Details are given in ref. 12.

The abundances of Fe and C+O obtained from the charge analysis were corrected for spillover from one rigidity bin to another due to the error in measuring Z/p. They were also corrected for interactions in 6.35 g/cm^2 of residual atmosphere and gondola material above the spectrometer. The resulting Fe/(C+O) ratio is shown in figure 2 as a function of rigidity, where it is compared with the results of other experiments.

The data of Anand et al.[8] are not plotted because they cover only the range from 13 to 19 GV/c; the data of Golden et al.[9] have been omitted because their uncertainty is approximately 50%. The $(23\leq Z\leq 28)/(6\leq Z\leq 9)$ data of Ormes and Balasubrahmanyan[6] have been multiplied by 0.96 to obtain an effective ratio for $(Z\geq 25)/(C+O)$. The $(Z=26+28)/(C+O)$ data of Webber et al.[3] have been multiplied by 1.1 for the same reason. The $(Z\geq 20)/(C+O)$ data of Saito et al.[7] at 10 g/cm^2 were multiplied by 1.4 to correct for atmospheric interactions and by 0.65 to convert to $(Z\geq 25)/(C+O)$. The

$(Z\geq 25)/(C+O)$ data of Smith et al.[1] were multiplied by 1.3 for an atmospheric correction.[15]

Our data above 10 GV/c yield $\Delta\gamma = 0.15 \pm 0.07$; all of the differential data above 10 GV/c except those of ref. 6 yield $\Delta\gamma = 0.22 \pm 0.05$. These data are hence consistent with the $\Delta\gamma$ expected due to propagation effects. Residual differences in fig. 2 are presumably due to systematic errors in at least some of the experiments (e.g. different atmospheric corrections would affect the overall normalizations). We feel the systematic error in our experiment is small for three reasons. First, the energy (rigidity) for each event was determined simply by measuring a curvature; in-flight calibration data taken after the magnet was turned off provided a check on this simple geometric determination. Second, the visualization of each event with optical spark chambers and our acceptance of only an allowed trajectory through the spectrometer permitted nearly complete background rejection. Finally, the data analysis had very high efficiency for good events.

We therefore conclude that the observed energy dependence of the Fe/(C+O) ratio can be explained by the same propagation effects needed to explain the decrease in the (Li+Be+B+N)/(C+O) ratio measured in this same energy range. There is no need to hypothesize new origins or history for Fe, and no evidence from this energy range that cosmic rays are predominantly iron nuclei above 10^8 GeV/nucleon.

This work was supported by the National Aeronautics and Space Administration grant NGR-05-003-553 and the Energy Research and Development Administration (Lawrence Berkeley Laboratory). We would like to thank

0 0 0 0 4 8 0 1 6 8 9

J. Arens, J.F. Ormes, R. Ramaty, and T. Gaisser for interesting conversations. We are grateful for the continued interest and support from L.W. Alvarez, R.W. Birge, and A.G. Opp, and for the hospitality of the NSBF in Palestine, Texas.

REFERENCES

1. L.H. Smith, A. Buffington, G.F. Smoot, L.W. Alvarez, and M.A. Wahlig, Ap. J. 180, 987 (1973).
2. E. Júliusson, Ap. J. 191, 331 (1974).
3. W.R. Webber, J.A. Lezniak, and J. Kish, 13th Int. C.R. Conf., Denver, 1, 248 (1973); and
   W.R. Webber, J.A. Lezniak, J.C. Kish, and S.V. Damle, Nature Phys. Sci. 241, 96 (1973).
4. V.K. Balasubrahmanyan and J.F. Ormes, Ap. J. 186, 109 (1973).
5. N. Lund, I.L. Rasmussen, B. Peters, and N.J. Westergaard, 14th Int. C.R. Conf., Munich, 1, 257 (1975).
6. J.F. Ormes and V.K. Balasubrahmanyan, Nature Phys. Sci. 241, 95 (1973).
7. T. Saito, Y. Sato, H. Sugimoto, T. Matsubayashi, and M. Noma, J. Phys. Soc. Jap. 37, 1462 (1974); also see T. Saito, J. Phys. Soc. Jap. 30, 1535 (1971).
8. K.C. Anand, T.N. Rengarajan, and S.A. Stephens, 13th Int. C.R. Conf., Denver, 1, 184 (1973).
9. R.L. Golden, J.H. Adams, G.D. Badhwar, C.L. Deney, P.J. Lindstrom, and H.H. Heckman, Nature 249, 814 (1974).
10. J.W. Elbert, G.W. Mason, J.L. Morrison, and V.S. Narasimham, J. Phys. G: Nucl. Phys. 2, 971 (1976).
11. R. Ramaty, V.K. Balasubrahmanyan, and J.F. Ormes, Science 180, 731 (1973).
12. C.D. Orth, A. Buffington, G.F. Smoot, and T.S. Mast, to be submitted to Ap. J. (1977).
13. C.D. Orth, A. Buffington, and G.F. Smoot, 14th Int. C.R. Conf., Munich, 1, 280 (1975).
14. G.F. Smoot, A. Buffington, C.D. Orth, and L.H. Smith, 13th Int. C.R. Conf., Denver, 1, 225 (1973).
15. The last row in Table 7 of ref. 1 should read $Z \geq 25$.

0 0 0 0 4 8 0 1 6 9 0

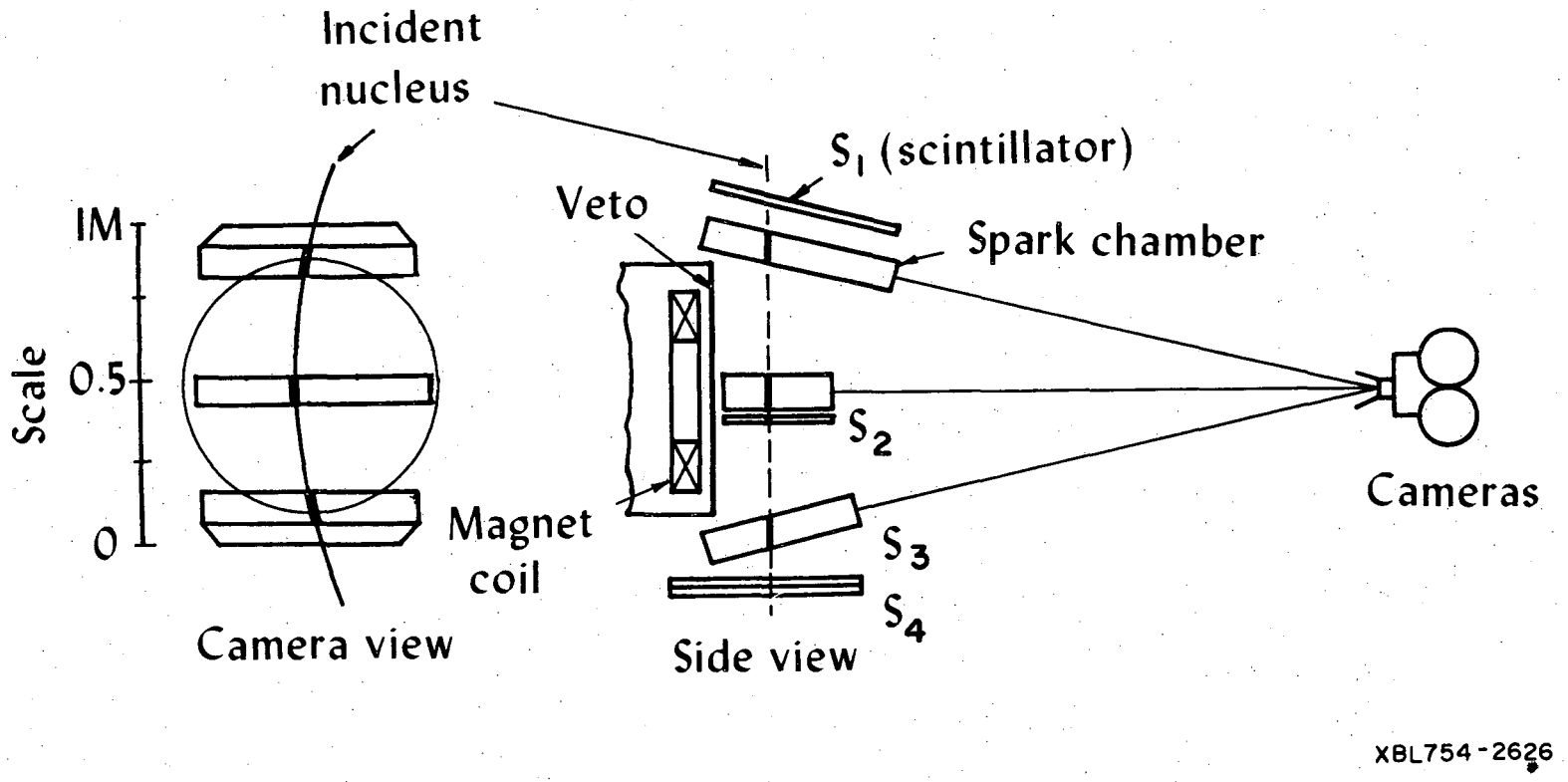

Figure 1. A schematic drawing of the balloon-borne superconducting magnetic spectrometer. The geometry is defined by 4 plastic scintillators and 3 optical spark chambers.

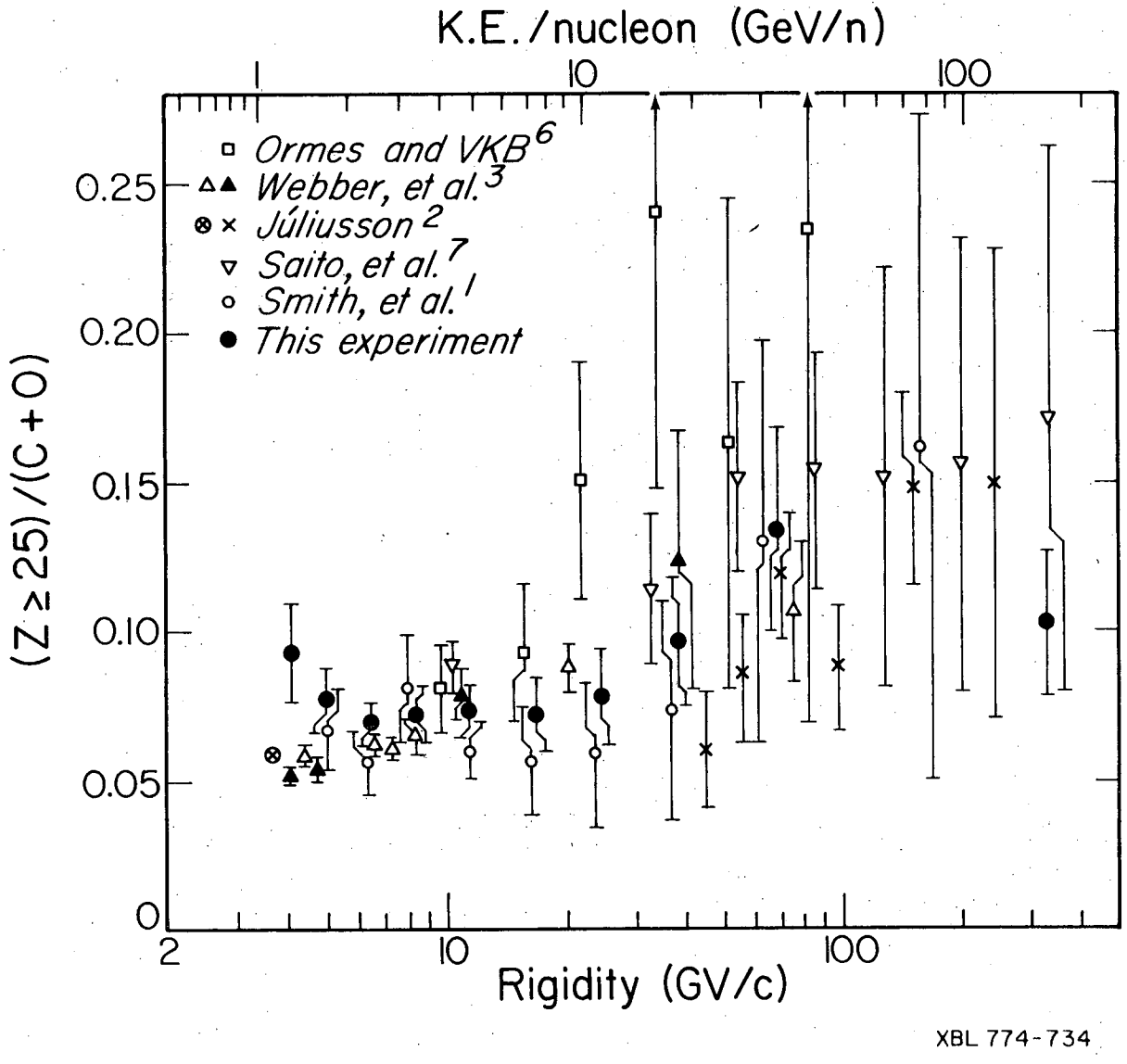

Figure 2. The ratio (Z≥25)/(C+O) at the top of the atmosphere as a function of rigidity. The conversion to kinetic energy per nucleon (top scale) assumes A/Z = 2. Our errors are statistical and do not include an estimated 10% uncertainty in scale for possible normalization error, due primarily to uncertainty in the Fe fragmentation cross section. Our results are consistent with those of Smith et al.,[1] which is a previous experiment by our group. The uncertainties shown for Saito et al.[7] and Webber et al.[3] pertain to their published integral spectra, and are hence artifically small compared to those of the other experiments, which are differential. Our highest rigidity point is integral, and is plotted at the weighted mean rigidity for C, O, and Z≥25.

This report was done with support from the United States Energy Research and Development Administration. Any conclusions or opinions expressed in this report represent solely those of the author(s) and not necessarily those of The Regents of the University of California, the Lawrence Berkeley Laboratory or the United States Energy Research and Development Administration.

TECHNICAL INFORMATION DIVISION
LAWRENCE BERKELEY LABORATORY
UNIVERSITY OF CALIFORNIA
BERKELEY, CALIFORNIA 94720