UC San Diego
SIO Reference

Title
Theory of attenuation measurements in planetary atmospheres

Permalink
https://escholarship.org/uc/item/3555153j

Author
Preisendorfer,, Rudolph W

Publication Date
1958-12-08

eScholarship.org Powered by the California Digital Library
University of California

Visibility Laboratory
University of California
Scripps Institution of Oceanography
San Diego 52, California

THEORY OF ATTENUATION MEASUREMENTS IN PLANETARY ATMOSPHERES

Rudolph W. Preisendorfer

8 December 1958
Index Number NS 714-100

Bureau of Ships
Contract NObs-72092

SIO REFERENCE 58-81

Approved:

Seibert Q. Duntley, Director
Visibility Laboratory

Approved for Distribution:

Roger Revelle, Director
Scripps Institution of Oceanography

Theory of Attenuation Measurements in Planetary Atmospheres

Rudolph W. Preisendorfer

Scripps Institution of Oceanography, University of California

La Jolla, California

ABSTRACT

Two general methods are proposed for the determination of the volume attenuation function α in arbitrarily inhomogeneous spherical atmospheres. Each method is deduced directly from the equation of transfer of general radiative transfer theory, and is designed to take into explicit account the effects of the sphericity of the earth's atmosphere on radiometric measurements at high altitudes in the atmosphere. The first method uses the discrete (or incremental) form of the equation of transfer applied to arbitrarily oriented paths in the atmosphere, and requires the measurement of radiance values at two altitude stations and the measurement of the path function at one station. The second method makes use of the vertical radiance gradient of the light field at the observer's horizon. This method allows all pertinent measurements to be made at a single altitude station. Each method results in a generalization of the customary formula for the attenuation function used in the stratified plane-parallel case. The discussions are facilitated by the introduction of a useful new concept: the <u>apparent volume attenuation function</u> α_a which provides a measure of the departure of the light field from the special equilibrium conditions used in the plane parallel case for the determination of α.

* This paper represents results of research which has been supported by the Bureau of Ships, U. S. Navy.

INTRODUCTION

For many practical purposes in image transmission studies, the earth's atmosphere may be assumed to be of stratified plane-parallel structure. There are some practical instances, however, in which the sphericity of the earth, and therefore that of its atmosphere, appears to cause measurable departures of the properties of the real light field from those predicted by means of the plane-parallel model. The present study provides a way to account for such departures arising from the atmosphere's sphericity which (in principle) affect the accurate determination, at high altitudes, of the volume attenuation function α .

Some Salient Differences Between Plane and Spherical Atmospheres

To gain some insight into how the sphericity of the atmosphere can cause systematic errors in the determination of α when customary methods are used, i.e., those derived on the basis of a plane-parallel assumption, consider the following (somewhat simplified) argument.

Diagram (a) of Figure 1 depicts an observation point at altitude z in an arbitrarily stratified plane parallel atmosphere. The customary procedure for determining $\alpha(z)$ runs as follows: let a radiance tube measure the horizontal radiance $N(z, \frac{\pi}{2}, \phi)$ at z , for some fixed azimuthal orientation ϕ . Furthermore, let a shortpath meter determine the value of the path function $N_*(z, \frac{\pi}{2}, \phi)$

at z for the same orientation. Then since the medium is assumed to be stratified, the path radiance for a horizontal path of length r is given by (Appendix I):

$$N_r^*(z, \tfrac{\pi}{2}, \phi) = \frac{N_*(z, \tfrac{\pi}{2}, \phi)}{\alpha(z)} \left[1 - e^{-F(z, \frac{\pi}{2}, r)} \right], \tag{1}$$

where

$$F(z, \tfrac{\pi}{2}, \phi) = \int_0^r \alpha(z')\, dr' = \alpha(z)\, r,$$

and where $N_r^*(z, \frac{\pi}{2}, \phi)$ and $N_*(z, \frac{\pi}{2}, \phi)$ for fixed (θ, ϕ) are independent of the location of the observation point of the path in the plane at altitude z. It follows that

$$\lim_{r \to \infty} N_r^*(z, \tfrac{\pi}{2}, \phi) = N(z, \tfrac{\pi}{2}, \phi) = \frac{N_*(z, \tfrac{\pi}{2}, \phi)}{\alpha(z)}, \tag{2}$$

from which $\alpha(z)$ may be estimated by the formula:

$$\alpha(z) = \frac{N_*(z, \tfrac{\pi}{2}, \phi)}{N(z, \tfrac{\pi}{2}, \phi)}, \tag{3}$$

in terms of the two <u>observable</u> quantities $N(z, \frac{\pi}{2}, \phi)$ and $N_*(z, \frac{\pi}{2}, \phi)$.

Diagram (b) of Figure 1 shows an analogous arrangement for a stratified spherical atmosphere. The inherent optical properties and path function of the atmosphere have been chosen so that at the observation point at height z they are identical with those at the corresponding observation point at height z in the plane parallel atmosphere. In addition, the vertical stratification (the height dependence) of the inherent optical properties of the two atmospheres is assumed identical. These optical conditions in each medium are made identical so that the conclusions reached below will afford an unobscured view of the effect of the differences in the geometrical structure of the media on the resulting observed values of $N(z, \frac{\pi}{2}, \phi)$.

Now, it can be shown under suitable assumptions about the light field (Appendix I) that $N_r^*(z, \frac{\pi}{2}, \phi)$ for the spherical medium is of the same general form as that of (1):

$$N_r^*(z, \tfrac{\pi}{2}, \phi) = \frac{N_*(z, \frac{\pi}{2}, \phi)}{\alpha(z)} \left[1 - e^{-F(z, \frac{\pi}{2}, r)} \right], \quad (4)$$

where

$$F(z, \tfrac{\pi}{2}, r) = \int_0^r \alpha(z')\, dr' ,$$

and $\alpha(z')$ varies in a known manner along the line of sight. For an earth of radius 4,000 miles, and a constant lapse rate of

1/10,000 per yard for its spherical atmosphere, it can be shown that (Appendix II)

$$\frac{\bar{F}(z, \frac{\pi}{2}, \infty)}{\alpha(0)} = 3.55 \times 10^5 \exp\left\{ \frac{-z}{10\,000} \right\} \quad \text{yards}$$

where z and $1/\alpha(0)$ are in yards.

From (4) it follows that

$$\lim_{r \to \infty} N_r^*(z, \tfrac{\pi}{2}, \phi) = N(z, \tfrac{\pi}{2}, \phi) = \frac{N_*(z, \frac{\pi}{2}, \phi)}{\alpha(z)} \left[1 - e^{-\bar{F}(z, \frac{\pi}{2}, \infty)} \right]. \tag{5}$$

The limit of $N_r^*(z, \frac{\pi}{2}, \phi)$ as $r \to \infty$ is the observed radiance $N(z, \frac{\pi}{2}, \phi)$. Equation (5) states, however, that this observed radiance is equal to $N_*(z, \frac{\pi}{2}, \phi)/\alpha(z)$ multiplied by the quantity in square brackets, which is less than one (unity). In view of our identical choice of optical properties and lighting conditions at the observation point in each medium, the quantity $N_*(z, \frac{\pi}{2}, \phi)/\alpha(z)$ is the same for each medium. Thus we may then conclude that, in general

$$N(z, \tfrac{\pi}{2}, \phi) \text{ (spherical atmosphere)} < N(z, \tfrac{\pi}{2}, \phi) \text{(plane atmosphere)} \tag{6}$$

We can now go on to some further observations. First, the quantity $N_*(z, \frac{\pi}{2}, \phi)/\alpha(z)$ is an observable quantity in the plane-parallel medium. However, in the spherical medium it is

not an observable quantity. In each case this quantity is a special case of the general concept of the equilibrium radiance which is defined as:

$$N_q(z,\theta,\phi) = \frac{N_*(z,\theta,\phi)}{\alpha(z)} . \tag{7}$$

We point out that the equilibrium radiance is in general a <u>non observable</u> quantity: only in very special instances (Equations(2)) is it directly observable.

Second, the expression (4) is a special case of the more general expression (Appendix I):

$$N_r^*(z,\theta,\phi) = N_q(z,\theta,\phi)\left[1 - e^{-F(z,\theta,r)}\right] , \tag{8}$$

which shows that

$$\begin{aligned} \lim_{r\to\infty} N_r^*(z,\theta,\phi) &= N(z,\theta,\phi) = \\ &= N_q(z,\theta,\phi)\left[1 - e^{-F(z,\theta,\infty)}\right] < N_q(z,\theta,\phi), \end{aligned} \tag{9}$$

for all infinitely long paths in the spherical atmosphere. According to this model, there is no infinitely long path (either upward or downward) through the spherical atmosphere such that the equilibrium radiance at the observation point equals the observed radiance of the path.

Finally, we observe that formula (3) holds rigorously only in the parallel case. From (5) we see corresponding formula for the spherical case is of the form:

$$\alpha(z) = \frac{N_*(z, \frac{\pi}{2}, \phi)}{N(z, \frac{\pi}{2}, \phi)} \left[1 - e^{-F(z, \frac{\pi}{2}, \omega)} \right] . \tag{10}$$

From this we draw the final, and perhaps the most important conclusion for our present purposes. In a spherical atmosphere the quantity:

$$\alpha_a(z, \tfrac{\pi}{2}, \phi) = \frac{N_*(z, \frac{\pi}{2}, \phi)}{N(z, \frac{\pi}{2}, \phi)} , \tag{11}$$

which is formed from the observable radiance $N(z, \frac{\pi}{2}, \phi)$ and the observable path function $N_*(z, \frac{\pi}{2}, \phi)$, is larger than the value $\alpha(z)$. Thus, the true value of $\alpha(z)$ is <u>less</u> than the estimate (11) based on the customary plane-parallel atmosphere procedures. Putting this in still another (equivalent) way: the use of (11) in a stratified <u>spherical</u> atmosphere will yield an estimate of $L(z)$, the attenuation length at height z, which is <u>smaller</u> than the true value of $L(z)$ at that height $\left(L(z) \equiv 1/\alpha(z) \right)$.

The Concept of the Apparent Volume Attenuation Function

The quantity defined in (11), having the units of inverse length, and yielding in the plane-parallel case the true value of $\alpha(z)$, is given the name: apparent volume attenuation function. It is a special case of the general <u>apparent volume attenuation function:</u>

$$\alpha_a(z,\theta,\phi) \equiv \frac{N_*(z,\theta,\phi)}{N(z,\theta,\phi)} \quad . \tag{12}$$

The concept of an apparent volume attenuation function plays a key role in the following discussions; it takes its proper place in the general theory of radiative transfer alongside the notion of the equilibrium radiance (7). For, like the equilibrium radiance, it provides a useful conceptual view of the dynamics of photons along their natural paths in a scattering-absorbing medium. To see this in more detail we recall that the equation of transfer:

$$\frac{dN(z,\theta,\phi)}{dr} = -\alpha(z)\,N(z,\theta,\phi) + N_*(z,\theta,\phi) \quad , \tag{13}$$

for a stratified medium may be written in terms of N_q as:

$$\frac{dN(z,\theta,\phi)}{dr} = \alpha(z)\left[N_q(z,\theta,\phi) - N(z,\theta,\phi)\right] . \tag{14}$$

Equation (14) shows that at each point of a path of sight,

$$N \longrightarrow N_q \quad , \tag{15}$$

i.e., that the observed radiance N always tends toward the equilibrium radiance N_q. Using now the definition of α_a as given in (12), the equation of transfer is expressible as:

$$\frac{dN(z,\theta,\phi)}{dr} = N(z,\theta,\phi)\left[\alpha_a(z,\theta,\phi) - \alpha(z)\right]. \tag{16}$$

This form of the equation of transfer will provide the basis for the two methods of measuring α proposed below.

In view of the fact that the relation between α and α_a can be written as:

$$\frac{\alpha_a(z,\theta,\phi)}{\alpha(z)} = \frac{N_q(z,\theta,\phi)}{N(z,\theta,\phi)} \quad , \tag{17}$$

and the fact that $N \longrightarrow N_q$, at each point of an arbitrary path, we can draw the following general conclusion that ,

$$\alpha_a \longrightarrow \alpha \quad , \tag{18}$$

at each point of an arbitrary path.

That is, the apparent volume attenuation function always tends toward the inherent (the true) volume attenuation function. This is a general conclusion which applies to all optical media. It must be pointed out that α_a in general can be either smaller than α or greater than α, depending on the direction associated with α_a, and the environmental optical conditions. In the preceding discussion (in particular that centered around (11)) the paths of sight did not intersect the earth's surface, a feature which permitted the special conclusion that $\alpha_a > \alpha$ in that case. Thus, we see from (17) that $\alpha_a > \alpha$ whenever $N_q > N$, that $\alpha_a < \alpha$ whenever $N_q < N$, and that $\alpha_a = \alpha$ if and only if $N = N_q$.

The preceding discussion has shown how the customary formula (3) fails, in principle, to supply an exact method for the determination of $\alpha(z)$ in stratified spherical atmospheres. A useful approximate method for the determination of $\alpha(z)$ in spherical atmospheres is given by (10). While it appears at first sight that (10) may be the exact expression for determining $\alpha(z)$ it should be recalled (Appendix I and II) that this formula incorporates some rather stringent assumptions about the behavior of N_k and α along the paths of sight. We now go on to discuss two methods which yield the appropriate generalization of (3) capable of handling, in principle, the determination of $\alpha(z)$ in arbitrarily stratified spherical atmospheres. The paper also presents a brief discussion of a further generalization of these methods to arbitrarily inhomogeneous media, and the associated radiometric measurements required by these general methods.

THE TWO-STATION (OR INCREMENTAL) METHOD

Consider Figure 2. Suppose that at observation point A_0, which is at an altitude z_0, there is a (specific) radiance $N(z_0, \theta_0, \phi_0)$. That is, photons travelling in a unit solid angle in the direction of the arrow at z_0 across a unit area normal to this direction, induce a radiance $N(z_0, \theta_0, \phi_0)$. It should be emphasized at the outset that the direction (θ_0, ϕ_0) and altitude z_0 are completely arbitrary in this method; thus the application of the resulting formula is valid in particular for any choice of (θ_0, ϕ_0). After the packet of photons has travelled a finite distance Δr in this direction, and has suffered losses and gains due to absorption and scattering processes, suppose it arrives at station B, at height z_1, with radiance $N(z_1, \theta_1, \phi_1)$. Because of the sphericity of the earth, θ_1 and ϕ_1 are generally different from θ_0 and ϕ_0. The coordinate system can, however, be chosen so that $\phi_0 = \phi_1$; nevertheless, for generality, we write ϕ_1, in $N(z_1, \theta_1, \phi_1)$. Now if the distance Δr is not too great (certainly not more than one attenuation length) the equation of transfer may very accurately be represented by its corresponding incremental form (for specific, or surface radiance):[1]

$$\frac{N(z_1, \theta_1, \phi_1) - N(z_0, \theta_0, \phi_0)}{\Delta r} = -\alpha(z_0) N(z_0, \theta_0, \phi_0) + N_*(z_0, \theta_0, \phi_0). \tag{19}$$

[1] See, e.g., Equation (10) in Duntley, Boileau, and Preisendorfer, "Image transmission by the troposphere," J. Opt. Soc. Am. 47, 499 (1957).

From this we have, after a simple rearrangement of terms, the following formula for $\alpha(z_0)$:

$$\boxed{\alpha(z_0) = \alpha_a(z_0,\theta_0,\phi_0) + \frac{1}{\Delta r}\left[1 - \frac{N(z_1,\theta_1,\phi_1)}{N(z_0,\theta_0,\phi_0)}\right].} \quad (20)$$

In this formula, $\alpha_a(z_0,\theta_0,\phi_0)$ is the value of the apparent volume attenuation function (Equation (12)) and is computed from the direct observables $N_{sk}(z_0,\theta_0,\phi_0)$ and $N(z_0,\theta_0,\phi_0)$ obtained at station A_0 . The observable radiance $N(z_1,\theta_1,\phi_1)$ at station B may be obtained, if stratification is assumed for the spherical atmosphere, by a measurement at station A_1, (Figure 2). From knowledge of z_0 , θ_0 , and ϕ_0 , and the radius of the earth, z_1 , θ_1 , and ϕ_1 , can be computed, given Δr . Thus the air-borne radiance and path function meters may remain in the immediate vicinity of the normal to the earth's surface containing $A_0 A_1$, and obtain, by measurement at stations A_0 and A_1, the requisite radiance and path function values for use in (20). Several observations may now be made:

(1) By choosing $\theta_0 = 180^\circ$ (or 0°) the stations A_0 and B are then constrained to lie on the same vertical line. This then requires measurement of zenith (or nadir) radiances, and path radiances associated with the appropriately sensed vertical line-segments. The principal advantage in choosing θ_0 with either of

these extreme values lies in the fact that the resultant from (20) is exact in that no assumption about stratification of the atmosphere is required for the use of data gathered at points A_0 and $A_1 (= B)$.

(2) Suppose, for example, the line of sight is such that the path $A_0 B$, when extended indefinitely in either direction, does not intersect the earth. It can then be shown on quite general grounds that when Δr is not too great, $N(z_1, \theta_1, \phi_1) > N_0(z_0, \theta_0, \phi_0)$ so that, from (20), $\alpha(z_0) < \alpha_a(z_0, \theta_0, \phi_0)$, which bears out the same conclusion reached in the Introduction, but from a different line of argument.

(3) If the line of sight $A_0 B$ is such that $\theta_0 = \frac{\pi}{2}$, and the atmosphere is assumed to be plane-parallel, then $z_0 = z_1$, and $N(z_0, \frac{\pi}{2}, \phi_0) = N(z_1, \frac{\pi}{2}, \phi_1)$, and (20) reduces to the customary formula (3).

THE ONE-STATION (OR HORIZON-GRADIENT) METHOD

To derive the basic equation for this method, we return to Equation (16). The present method arises from the decomposition of the total derivative dN/dr into a sum of partial derivatives with respect to z, θ, and ϕ. To provide an heuristic background for this mathematical formality, consider Figure 3.

Suppose a packet of photons leaves point A at altitude z and travels in the direction θ toward B, a small distance dr away. As the packet traverses this distance, it generally changes its altitude an amount dz, and its angle with the earth's normal an amount $d\theta$. The coordinate system can be chosen so that there is no immediate rate of change in ϕ (measured in the xy-plane, where the positive y-axis is perpendicular to the diagram and away from the reader).

Thus, the total derivative $dN(z,\theta,\phi)/dr$ of $N(z,\theta,\phi)$ is generally of the form:

$$\frac{dN(z,\theta,\phi)}{dr} = \frac{\partial N(z,\theta,\phi)}{\partial z}\frac{dz}{dr} + \frac{\partial N(z,\theta,\phi)}{\partial \theta}\frac{d\theta}{dr} + \frac{\partial N(z,\theta,\phi)}{\partial \phi}\frac{d\phi}{dr} \quad (21)$$

From the diagram, we can pick off the values of dz/dr, $d\theta/dr$, and $d\phi/dr$:

$$\frac{dz}{dr} = \cos\theta \quad , \tag{22}$$

$$\frac{d\theta}{dr} = -\frac{d\psi}{dr} = -\frac{\sin\theta}{R+z} \quad , \tag{23}$$

and,

$$\frac{d\phi}{dr} = 0 \quad . \tag{24}$$

Further, from the general theory of radiative transfer, we have the concept of the K-function for radiance:[1]

$$K(z,\theta,\phi) = \frac{-1}{N(z,\theta,\phi)} \frac{\partial N(z,\theta,\phi)}{\partial z} \quad . \tag{25}$$

In analogy to this we define, for our present purposes, the <u>vertical (logarithmic) gradient function</u>:

$$\Gamma(z,\theta,\phi) = \frac{-1}{N(z,\theta,\phi)} \frac{\partial N(z,\theta,\phi)}{\partial \theta} \quad . \tag{26}$$

---

[1] R. W. Preisendorfer, "Canonical Forms of the Equation of Transfer," SIO Ref. 58-47, Scripps Institution of Oceanography, University of California, La Jolla, California (1958).

This function, as is the case for the K-function, is completely general and applicable to any stratified optical medium (aerosols, hydrosols, etc).

Now from (16):

$$\alpha(z) = \alpha_a(z,\theta,\phi) - \frac{1}{N(z,\theta,\phi)} \frac{dN(z,\theta,\phi)}{dr}, \qquad (27)$$

which, in view of the preceding definitions, may be cast into the form:

$$\alpha(z) = \alpha_a(z,\theta,\phi) + \cos\theta\, K(z,\theta,\phi) - \frac{\sin\theta}{R+z}\, \Gamma(z,\theta,\phi). \qquad (28)$$

Equation (28) is the exact general formula for $\alpha(z)$ in a stratified spherical atmosphere. The one-station method receives its name from the special form of (28) obtained by setting $\theta = \frac{\pi}{2}$, $\phi = 0$. The resultant formula is:

$$\boxed{\alpha(z) = \alpha_a(z, \tfrac{\pi}{2}, 0) - \frac{\Gamma(z, \frac{\pi}{2}, 0)}{R+z}\,.} \qquad (29)$$

From this we see that the one-station method consists in measuring $N(z, \frac{\pi}{2}, 0)$, and $N_*(z, \frac{\pi}{2}, 0)$ in the xz-plane at a single altitude station at height z , and performing the indicated operation in (12) to obtain α_a . The quantity $\Gamma(z, \frac{\pi}{2}, 0)$ is the value of the vertical gradient function for the direction $(\frac{\pi}{2}, 0)$ at height z , and may be obtained by performing small vertical angular sweeps across the observer's horizon* with a narrow-field radiance meter, and taking the logarithmic derivative of the resultant data, in accordance with the definition (26).

We conclude with several observations on (28) and (29):

(1) In the particular case of $\theta = 180^\circ$ (or 0°) equation (28) drops the Γ -term, and provides a means of obtaining $\alpha(z)$ from measurements of N and N_* along a vertical path. This is the continuous analog to the situation discussed in the two-station method.

(2) The quantity $\Gamma(z, \frac{\pi}{2}, 0)$, as defined, is generally (with the exception of a few cases) positive, at high altitudes, so that once again it is seen from either (28) or (29) that $\alpha(z) < \alpha_a(z, \frac{\pi}{2}, \phi)$.

---

* The observer's horizon at height z is the totality of directions $(\frac{\pi}{2}, \phi)$ at height z .

(3) By letting $R \rightarrow \infty$ in either (28) or (29) we obtain the customary plane-parallel situation, and its attendant conclusions.

GENERALIZATIONS

The following generalizations of the two proposed methods extend their domains of applicability to arbitrarily inhomogeneous media, i.e., to media in which the inherent optical properties and the properties of the light field vary in general not only as functions of z but also as functions of x and y. The resulting formulas are valid for <u>any</u> location (x , y , z) and <u>any</u> orientation (θ, ϕ) of the path of sight in a spherical (or plane) atmosphere.

Generalized Two-Station Method

The two-station method as it stands in the form of equation (20), does not implicitly incorporate any assumptions about stratification of the medium. Only in the discussion of the method of collecting data on $N(z_1, \theta_1, \phi_1)$ was an assumption of this kind made. Hence, after only minor notational changes (the inclusion of x_0 , y_0 , and x_1 , y_1 in the functional expressions for α , α_a , and N) (20) stands ready for use in arbitrary curvilinear media.

Therefore, with a general theoretical formula for $\alpha(x_0, y_0, z_0)$ as given by (20), the burden of the correct determination of the volume attenuation function falls on the method of gathering data in the field. From the diagram of Figure 2, it is clear that there must be some capability of directly traversing the segment A_0B in the atmosphere at a time rate which is small compared with the time rates of change of the ambient light field. The suggestion of the use of modern jet or rocket-propelled craft (in addition to the customary instrument carriers) for such a task is an immediate and obvious one.

Generalized One-Station Method

The extension of the one-station method to non-stratified media is straightforward and offers no essential difficulties. For the present more general case the radiance function is written in the form $N(x, y, z, \theta, \phi)$ and the total derivative is additively decomposed as before, but now with the two additional terms involving the partial derivatives of N with respect to x and y :

$$\frac{dN(x,y,z,\theta,\phi)}{dr} = \frac{\partial N(x,y,z,\theta,\phi)}{\partial x}\frac{dx}{dr} + \frac{\partial N(x,y,z,\theta,\phi)}{\partial y}\frac{dy}{dr} + \frac{\partial N(x,y,z,\theta,\phi)}{\partial z}\frac{dz}{dr} + \frac{\partial N(x,y,z,\theta,\phi)}{\partial \theta}\frac{d\theta}{dr} + \frac{\partial N(x,y,z,\theta,\phi)}{\partial \phi}\frac{d\phi}{dr} . \tag{30}$$

We now require in addition the functions:

$$I(x,y,z,\theta,\phi) \equiv \frac{-1}{N(x,y,z,\theta,\phi)} \frac{\partial N(x,y,z,\theta,\phi)}{\partial x}, \quad (31)$$

$$J(x,y,z,\theta,\phi) \equiv \frac{-1}{N(x,y,z,\theta,\phi)} \frac{\partial N(x,y,z,\theta,\phi)}{\partial y}, \quad (32)$$

along with

$$K(x,y,z,\theta,\phi) \equiv \frac{-1}{N(x,y,z,\theta,\phi)} \frac{\partial N(x,y,z,\theta,\phi)}{\partial z} \quad (33)$$

which was defined earlier (equation (25)) in the stratified context.

In Figure 3 the positive x-axis and z-axis are in as shown, and the positive y-axis runs perpendicularly into the diagram away from the reader. As in the case of equation (28) it is clearly possible to choose the coordinate system so that $\phi = 0$, $d\phi/dr = 0$, $y = 0$, and in addition,

$$\frac{dy}{dr} = 0. \quad (34)$$

Thus the pertinent measurements can be made in the xz-plane. On the other hand, we have

$$\frac{dx}{dr} = \sin\theta \, . \tag{35}$$

It follows that the general form of (28) for non-stratified media may be cast into the form:

$$\alpha(x,0,z) = \alpha_a(x,0,z,\theta,0) + \sin\theta \, I(x,0,z,\theta,0) + \\ + \cos\theta \, K(x,0,z,\theta,0) - \frac{\sin\theta}{R+z} \Gamma(x,0,z,\theta,0) \, . \tag{36}$$

Thus the corresponding generalized form of (29) is:

$$\boxed{\alpha(x,0,z) = \alpha_a(x,0,z,\tfrac{\pi}{2},0) + I(x,0,z,\tfrac{\pi}{2},0) - \frac{\Gamma(x,0,z,\tfrac{\pi}{2},0)}{R+z} \, .} \tag{37}$$

We conclude by observing that the one-station method in the general non-stratified case is still a "one-station" method in the following sense: the instrument carrier is to remain for a certain short interval of time at a fixed altitude z while it travels in the xz-plane in the direction of the positive x-axis ($\theta = \frac{\pi}{2}$, $\phi = 0$). Its travel in this direction provides a basis for

estimating $I(x,0,z,\frac{\pi}{2},0)$; the method for accomplishing this is suggested at once by an inspection of the definition of $I(x,y,z,\theta,\phi)$. However, now, because of non-stratification, both $\alpha_a(x,0,z,\frac{\pi}{2},0)$ and $\Gamma(x,0,z,\frac{\pi}{2},0)$ must be measured with relative celerity as the instrument carrier passes some predetermined point $(x,0,z)$ because they are, by hypothesis, quantities which change with x .

APPENDIX I

Derivation of Formulas (1) and (4)

In the general theory of radiative transfer the path radiance for a path of length r with observation point at (z,θ,ϕ) , may be defined as:

$$N_r^*(z,\theta,\phi) = \int_0^r N_*(z',\theta',\phi')\, T_{r'}(z,\theta,\phi)\, dr', \qquad \text{(A1)}$$

where N_* is the path function and T_r is the beam transmittance function. Suppose that the observation point is at some fixed altitude z in either a plane or spherical atmosphere (as in Figure 1(a) or 1(b)). Suppose further that the path function varies only with altitude z' above the surface of the medium. More precisely, let

$$N_*(z', \theta, \phi) = N_*(z, \theta, \phi)\, f(z - z'), \tag{A2}$$

where f is quite arbitrary in its z -dependence, and is required only to have the properties that f is **piecewise continuous**, and that

$$\left.\begin{aligned} f(0) &= 1, \\ \int_z^\infty f(z - z')\, dz' &< \infty, \end{aligned}\right\} \quad z \geq 0. \tag{A3}$$

In addition, let the volume attenuation function depend in precisely the same way with altitude only. That is:

$$\alpha(z') = \alpha(z)\, f(z - z'). \tag{A4}$$

The customary assumption is to choose f as:

$$f(z - z') = e^{m(z - z')}, \tag{A5}$$

where m is the constant exponential lapse rate of an (isothermal, constant gravity-field) atmosphere; however, the specific form of f is quite inessential to the present line of argument, and except for the condition (A3) we shall leave its exact nature unspecified.

It follows that the optical length associated with this path may be written:

$$\bar{r}(z,\theta,r) = \int_0^r \alpha(z')\,dr' = \alpha(z)\int_0^r f(z-z')\,dr', \quad \text{(A6)}$$

where, once the path of sight is specified, the exact dependence of z' on r' is known. Furthermore:

$$T_r(z,\theta,\phi) = \exp\left\{-\bar{r}(z,\theta,r)\right\}. \quad \text{(A7)}$$

Hence, (A1) may be written:

$$N_r^*(z,\theta,\phi) = N_*(z,\theta,\phi)\int_0^r f(z-z')\exp\left\{-\alpha(z)\int_0^{r'} f(z-z'')\,dr''\right\}dr'$$

$$= \frac{N_*(z,\theta,\phi)}{\alpha(z)}\int_0^r e^{-\bar{r}'}\,d\bar{r}' \quad \text{(A8)}$$

$$= \frac{N_*(z,\theta,\phi)}{\alpha(z)}\left[1 - e^{-\bar{r}(z,\theta,r)}\right].$$

exists and is <u>finite</u>, so that the inequality,

$$\left[1 - e^{-F(z,\theta,\omega)}\right] < 1 ,$$

holds in general.

APPENDIX II

The Formula for Optical Length in a Spherical Optical Standard Atmosphere

The spherical atmosphere associated with the function f in the form (A5) is called a Spherical Optical Standard Atmosphere. For the present discussion, we will choose a lapse rate to be of magnitude:

$$m = \frac{1}{10\,000} \quad \text{per yard.} \tag{A12}$$

From Figure 4, it is easy to see that (A6) now takes the form

$$F(0,\theta,\omega) = \alpha(0) R \sin\theta \int_0^{\theta_r} \exp\left\{ mR\left[1 - \frac{\sin\theta}{\sin(\theta-\theta')}\right]\right\} \frac{d\theta'}{\sin^2(\theta-\theta')}$$

where R (= 4000 miles) is the radius of the sphere bounding the atmosphere from below, and θ_r is defined by

$$\frac{r}{R} = \frac{\sin\theta_r}{\sin(\theta-\theta_r)} , \quad \theta \neq 0 . \tag{A13}$$

The θ , r , m , and R are given fixed constants in (A12).

The general relation between $\bar{F}(z,\theta,r)$ and $\bar{F}(0,\theta,r)$ is:

$$\bar{F}(z,\theta,r) = e^{-mz}\,\bar{F}(0,\theta,r) . \tag{A14}$$

It is clear that, for either geometry, (plane or spherical) we also have

$$\frac{\bar{F}(0,0,r)}{\alpha(0)} = \frac{1}{m}\left(1-e^{-mr}\right) , \tag{A15}$$

so that

$$\frac{\bar{F}(0,0,\infty)}{\alpha(0)} = \frac{1}{m} = 10\,000 \text{ yds} .$$

For the plane case we have in addition the useful property:[2]

$$\bar{F}(z,\theta,r) = \sec\theta\,\bar{F}(z,0,r) . \tag{A16}$$

No such simple relation exists for the spherical case, (however, see TABLE I for the angular range $0 \leq \theta \leq 80^\circ$).

---

2. Further properties of $\bar{F}$ for the plane case are given in, R. W. Preisendorfer, "Lectures on Photometry, Hydrological Optics, Atmospheric Optics," Vol. I, Scripps Institution of Oceanography, University of California, La Jolla, California, Fall 1953.

A comparison of $F(0,\theta,\infty)/\alpha(0)$ for the plane and spherical O.S.... is given in TABLE I.

TABLE I

Values of $\frac{F(0,\theta,\infty)}{\alpha(0)}$ in Yards

θ	Spherical	Plane	Δ (Yds)
0°	10 000	10 000	0
10°	10 154	10 154	0
20°	10 642	10 642	0
30°	11 547	11 547	0
40°	13 050	13 054	4
50°	15 550	15 557	7
60°	19 940	20 000	60
70°	28 820	29 238	418
80°	55 370	57 588	2 218
82°	67 940	71 853	3 913
84°	87 260	95 668	8 408
86°	120 460	143 360	22 900
88°	186 850	286 540	99 690
90°	355 000	∞	∞

A more detailed comparison of $\frac{\bar{F}(0,\theta,r)}{\alpha(0)}$ as functions of r are given below for the two values $\theta = 80°, 90°$.

TABLE II

Detailed Comparison for $\theta = 80°, 90°$

Geometric length r yds	Spherical $\bar{F}(0,80°,r)/\alpha(0)$	Plane $\bar{F}(0,80°,r)/\alpha(0)$
9 458	8 736	8 719
18 920	16 120	16 130
28 380	22 380	22 410
37 840	27 670	27 740
52 050	34 170	34 270
85 220	44 140	44 480
128 000	50 550	51 350
∞	55 370	57 588

Geometric range r yds	Spherical $\bar{F}(0,90°,r)/\alpha(0)$	Plane $\bar{F}(0,90°,r)/\alpha(0) = r$
10 000	9 998	
46 540	46 380	
93 140	91 520	
139 600	134 200	
186 300	173 600	
232 700	209 000	
349 300	277 700	
746 300	352 000	
∞	355 000	

Finally, Figure 5 shows two plots of the equilibrium factor:

$$Q(z, \tfrac{\pi}{2}, \infty) = \left[1 - e^{-F(z, \frac{\pi}{2}, \infty)} \right] , \qquad (A17)$$

for two spherical atmospheres with common lapse rate $m = 10^{-4}/yd$. The two atmospheres are characterized by their attenuation lengths at ground level ($z = 0$): $1/\alpha(0) = L(0)$ = 25 miles, $L(0)$ = 50 miles. For example, for a 50-mile atmosphere, Q at $z = 33{,}000$ yds (about 100,000 ft.) is 0.10. These plots are based on the following computed values of $Q(z, \frac{\pi}{2}, \infty)$:

TABLE III

		z Yds $= 10^3$	5×10^3	10^4	2×10^4	3×10^4	8×10^4	10^5	5×10^5
50 mi	$Q(z, \frac{\pi}{2}, \infty)$	0.974	0.914	0.773	0.421	0.182	0.00136	0.000183	0
25 mi	$Q(z, \frac{\pi}{2}, \infty)$	0.999	0.993	0.949	0.664	0.331	0.00271	0.000366	0

Acknowledgement

The computations leading to TABLES I and II of APPENDIX II were performed under the direction of the author by Mr. Thomas Moore in October 1954. The computations leading to TABLE III and Figure 5 were based on the appropriate entries in TABLE I, and were performed by Mr. W. Hadley Richardson.

WMP:deg
10 Nov '58

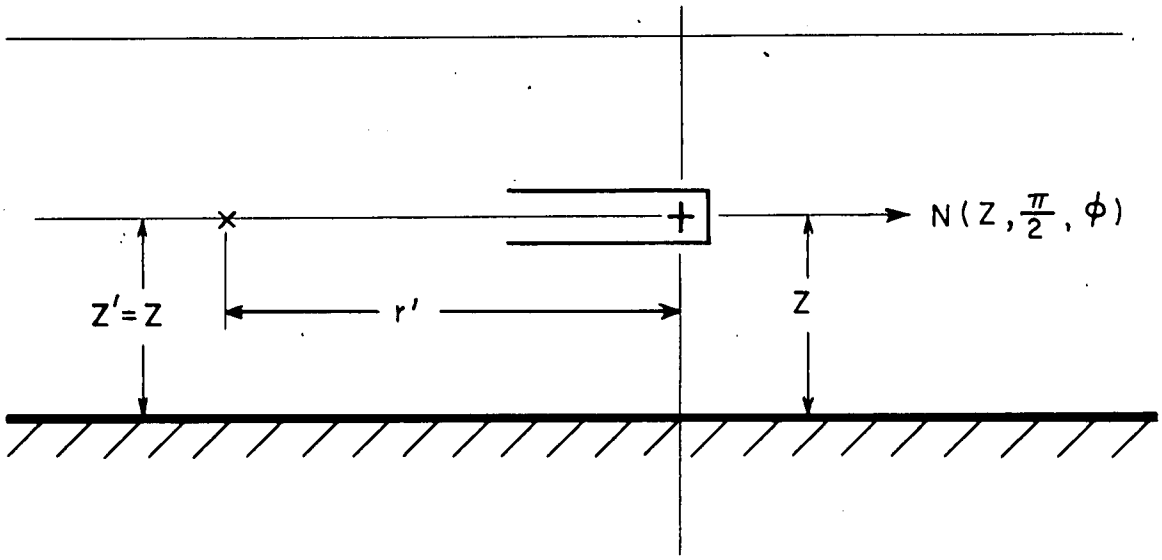

(a) Plane Atmosphere

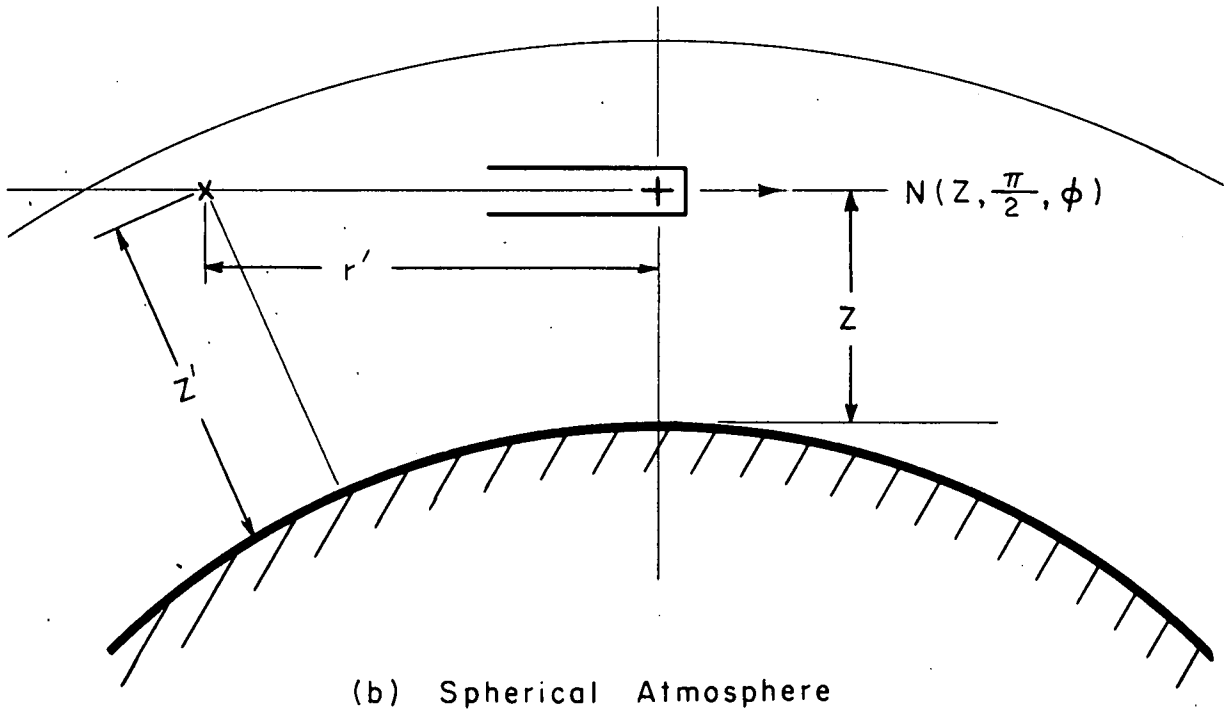

(b) Spherical Atmosphere

Figure 1

R. W. Preisendorfer

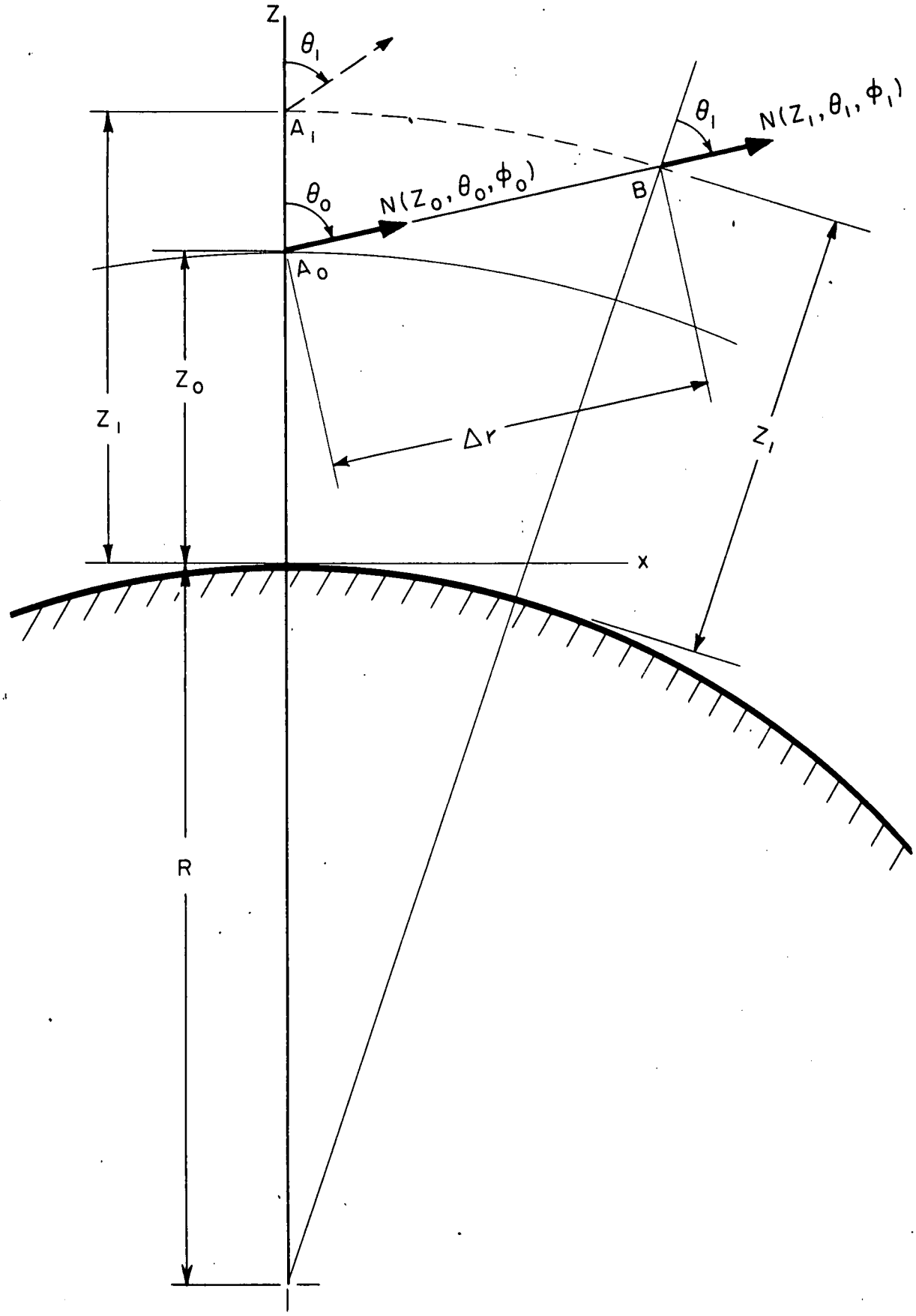

Figure 2
R. W. Preisendorfer

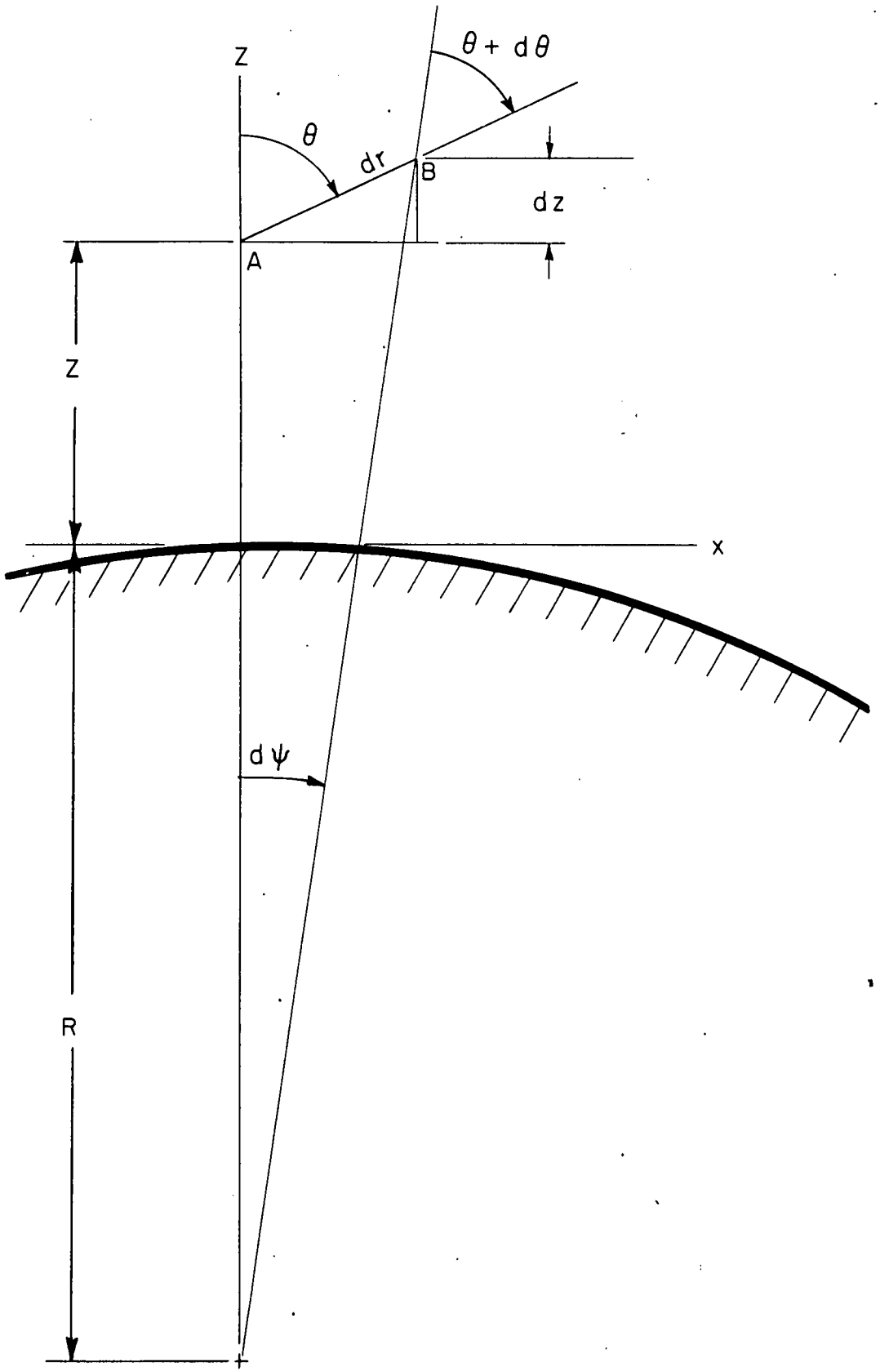

Figure 3
R. W. Preisendorfer

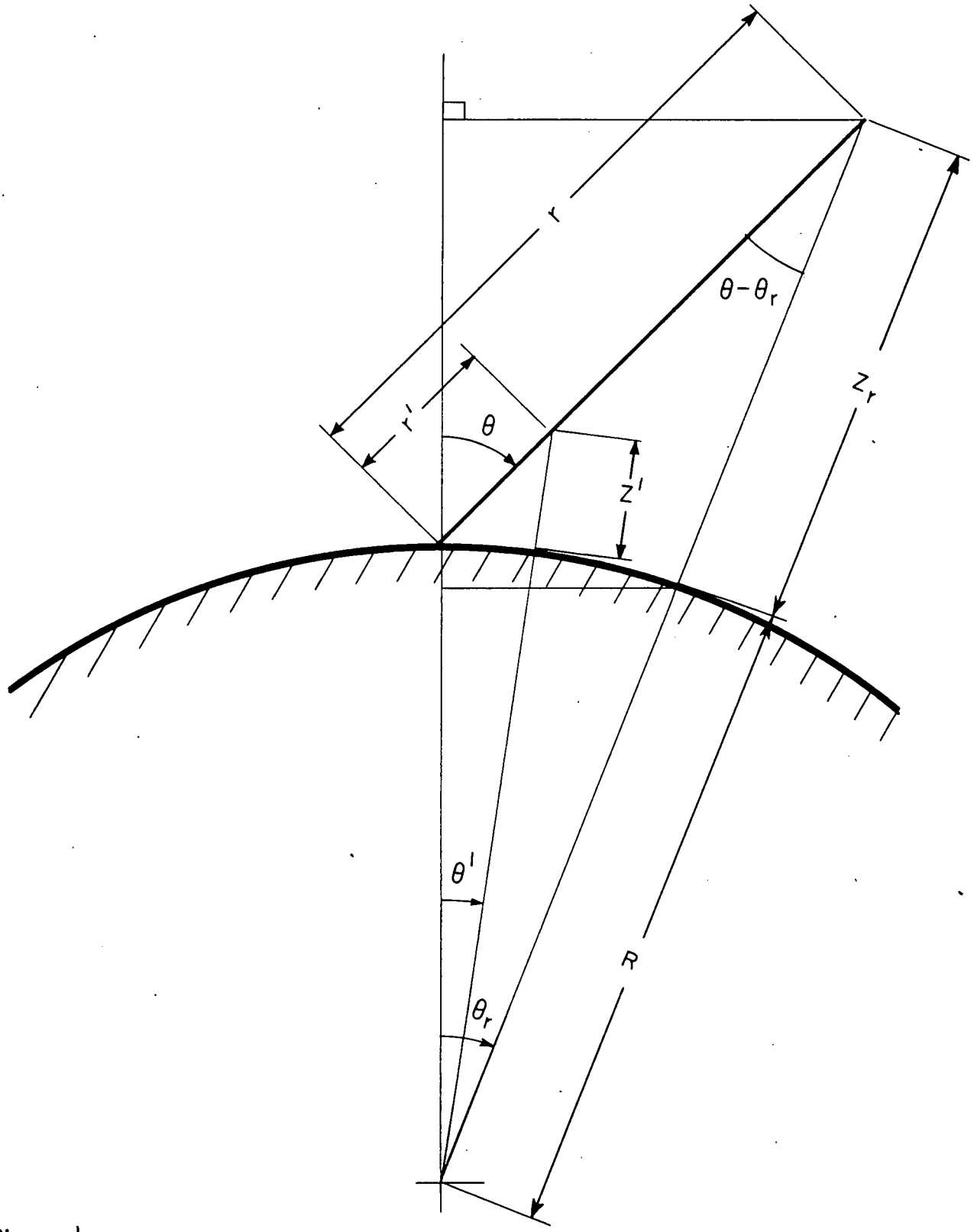

Figure 4

R. W. Preisendorfer

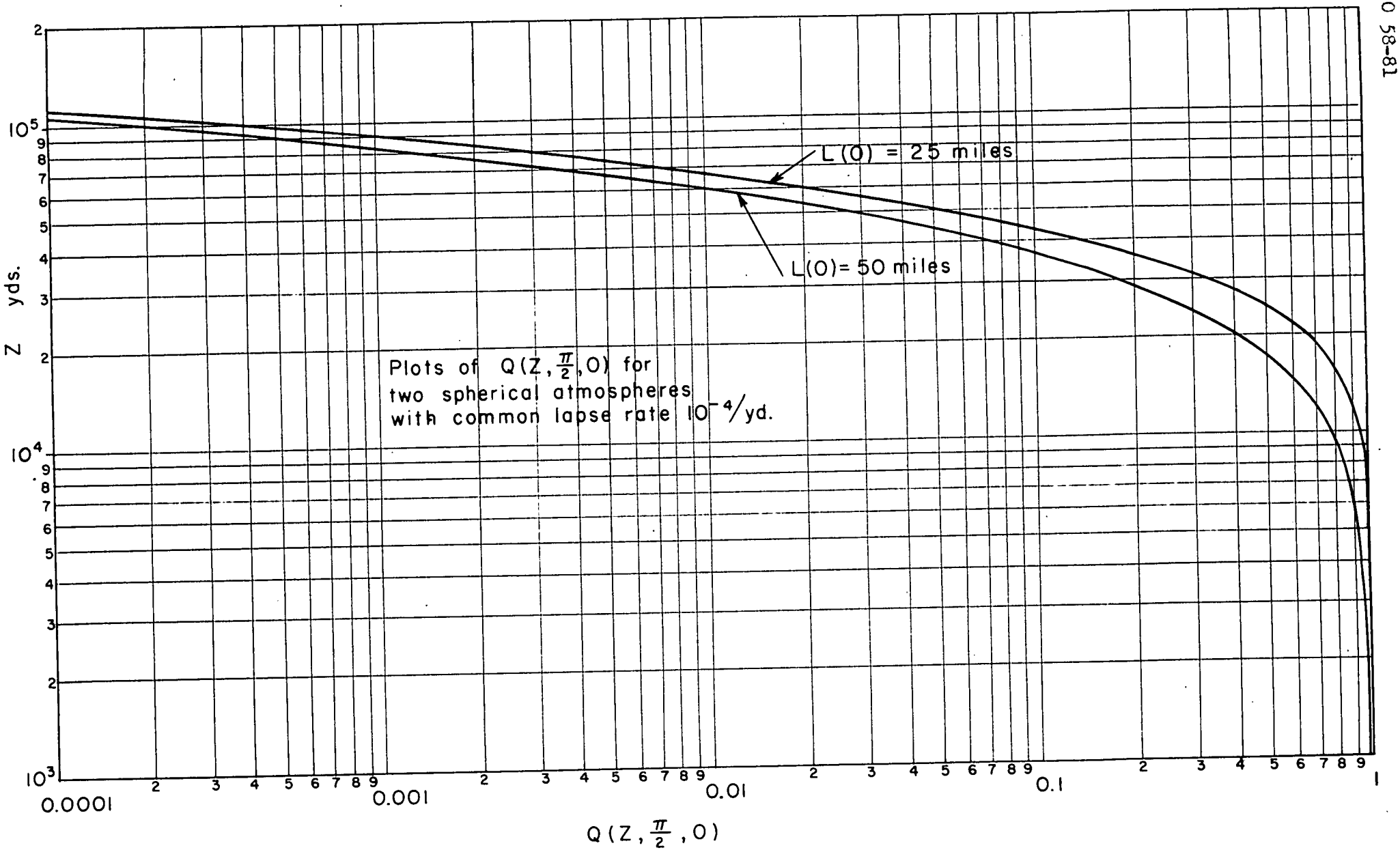

Figure 5
R. W. Preisendorfer