UC Irvine
UC Irvine Previously Published Works

Title
Clearing the air

Permalink
https://escholarship.org/uc/item/3zs023df

Author
Winebrake, JJ

Publication Date
2001

Copyright Information
This work is made available under the terms of a Creative Commons Attribution License, availalbe at https://creativecommons.org/licenses/by/4.0/

Peer reviewed

eScholarship.org Powered by the California Digital Library
University of California

Chapter 3

Cleaning the Air

Robert F. Phalen

Contents

I. Introduction 26
   A. Objectives 26
   B. Commonly Encountered Air Contaminants 26
II. Gas and Vapor Removal 27
III. Particle Removal 30
IV. Safety Considerations 31
V. Problems Encountered 32
VI. Air Purification and Conditioning Systems 32
   A. A Low-Pressure System 32
   B. A High-Pressure System 34
VII. Suppliers of Equipment 37
   A. Gauges, Meters, Fittings, Tools, Controllers, etc. 37
   B. Filters, Air Purifiers, Air Dryers, Gas Scrubbers 37
VIII. Sample Data Obtained 38
References 38

0-8493-3343-1/97/$0.00+$.50
© 1997 by CRC Press, Inc.

I. Introduction

A. Objectives

Inhalation studies must meet rigorous standards with respect to the generation and control of the exposure environment. Purified air, having precisely adjusted temperature and humidity, is intentionally polluted by adding substances having known and stable compositions, concentrations, and physical characteristics. No unwanted contaminants should be present. In most studies, a matched control population of subjects is exposed either simultaneously (preferred) or serially (not preferred) to purified air (with matched temperature and humidity) which contains insignificant levels (at most) of the pollutants. One requirement of such studies is the ability to clean and condition large quantities of impure, contaminated ambient air. To meet this requirement, a suitable air purification and conditioning system must be designed, installed, tested, and operated. The objective of this chapter is to present the fundamental issues, along with the problems and solutions, involved in providing enough purified air at the proper humidity and temperature to support an inhalation study. A more complete treatment of air cleaning for inhalation studies has been published.[1] Much of what follows is from this reference.

B. Commonly Encountered Air Contaminants

The air used in inhalation studies is ultimately derived from ambient air; rarely is the purity of this air sufficient to use in an exposure without prior cleaning. All of the significant indoor and/or outdoor air pollutants must, therefore, be substantially removed from the air prior to its use. These pollutants include natural and anthropogenic particles, as well as gases and vapors (inorganic, organic, and mixtures). Additionally, the ambient air can have a temperature and humidity that are inappropriate and thus require adjustment.

The devices used for the filtering and conditioning of ambient air will offer resistance to the flow of air and require an air compressor in order to provide the needed air flow rate. Air from a compressor is usually stored in a high-pressure holding tank before being piped into the laboratory. Typically, compressed air is quite dirty, containing a large variety of undesirable contaminants (Table 3.1). Aside from atmospheric dust and other particles, compressed air is likely to contain aerosolized lubricants, unburned petroleum fuel, fuel combustion products, water droplets and vapor, and scales from internal surfaces of tanks, pipes, and fittings.[2] The use of filters and oil-less compressors will eliminate many contaminants; however, additional air purification is almost always necessary.

TABLE 3.1
Commonly Encountered Airborne Contaminants in Unfiltered Compressed Air

Source	Contaminants
Ambient air	Soil and other dusts, miscellaneous gases and vapors
Compressor lubrication	Oil mist, oil decomposition products
Fuel, fuel combustion	Hydrocarbons, carbon monoxide, carbon dioxide, nitrogen dioxide, aldehydes, water vapor, acid-forming gases
Holding tank, pipes, and other surfaces	Metal, metal oxide particles, sediment particles

Source: Phalen, R. F., *Inhalation Studies: Foundations and Techniques*, CRC Press, Boca Raton, FL, 1984, 78.

II. Gas and Vapor Removal

In addition to the gases and vapors that contaminate supply air, water vapor often will have to be removed to prevent condensation in the air supply system. Table 3.2 gives the amount of water vapor in saturated air as a function of temperature. Relative humidity is defined as the percentage of saturation with water vapor at the prevailing temperature. The major methods for removal of water vapor from a gas stream are adsorption, absorption, and condensation, usually stimulated by cooling. Each method has its own removal efficiency, capacity, and cost. (Removal efficiency as used here is the number of milligrams of water remaining per liter of air after the removal process has reached equilibrium.) An example of an efficient drying method is extreme cooling. Cooling to –70°C with dry ice and acetone leaves about 0.01 mg of water per liter of air at equilibrium (i.e., 100% relative humidity at this low temperature). This moisture content at room temperature represents a relative humidity of only about 5%. Ordinary refrigerated-air cooling units can be used to reduce the relative humidity of the air to about 20 to 30%, upon re-warming to room temperature.

Cooling of an air stream, as seen in Table 3.2, reduces the maximum amount of water vapor that is carried in the air at saturation. As an example, consider a refrigeration unit that cools an air stream to 30°F and is followed by a heater that increases the air stream temperature to 70°F before passage into an exposure chamber. From Table 3.2, the cooling will result in a maximum water content of 4.5 g/m^3 of air. Upon warming to 70°F, this 4.5 g/m^3 represents about 23% of the saturation value of 18.5 g, resulting in a relative humidity of about 23% in the chamber.

Removal of water vapor by absorption or adsorption is achieved by solid or liquid desiccants. Such desiccants may have an added indicator that changes color when the material is water saturated, as well as the potential for regeneration by heating or flushing with dry air. Some disadvantages of desiccants

TABLE 3.2
Amounts of Water Vapor in Clean Air at Saturation (100% Relative Humidity) as a Function of Temperature

Air temperature (T)		Grams of water per m^3 of air (at temperature T)
°F	°C	
0	−17.8	1.23
10	−12.2	1.86
20	−6.7	2.94
30	−1.1	4.49
40	4.4	6.55
50	10.0	9.40
60	15.6	13.27
70	21.1	18.45
80	26.7	25.31
90	32.2	34.23
100	37.8	45.74
110	43.3	60.39
120	48.9	78.86
130	54.4	101.8
140	60.0	130.2
150	65.6	165.1
160	71.1	207.3
170	76.7	258.1
180	82.2	319.0
190	87.8	391.2
200	93.3	476.2

Source: Phalen, R. F., *Inhalation Studies: Foundations and Techniques*, CRC Press, Boca Raton, FL, 1984, 78.

include relatively long equilibration times and the buildup of heat during the desiccation process. Solid desiccants include calcium sulfate, activated alumina, and molecular sieves (Table 3.3). Liquid desiccants include sulfuric acid, triethylene glycol, sodium hydroxide, potassium hydroxide, calcium chloride, and glycerol (Table 3.4). Nelson[3] has a useful discussion of desiccants that may be consulted by designers.

In addition to the particulate pollutants in compressed air, ambient pollutant gases may also be present in sufficient concentrations to require removal. Such gases include ozone, sulfur dioxide, and oxides of nitrogen. Removal of such gases can be performed by adsorption onto a large surface area (activated charcoal, for example) or by chemical oxidation to produce a product that is easily removed. For this latter purpose, a catalyst bed or an oxidizer bed can be used to promote reactions such as:

TABLE 3.3
Efficiencies in Terms of Residual Water Content of Selected Solid Desiccants Used for Drying 25°C Nitrogen Gas at 225 cc/min Through a Bed 14 × 450 mm

Desiccant	Average efficiency (mg/l of air)	Regeneration time (hr), temp. (°C)
Calcium sulfate (Drierite®)	0.067	1–2, 200–225
Silica gel	0.070	12, 118–127
Activated alumina	0.0029	6–8, 175–400
Anhydrous magnesium perchlorate	0.0002	48, 245
Molecular sieve 5A (Union Carbide®)	0.0039	—

Source: Phalen, R. F., *Inhalation Studies: Foundations and Techniques,* CRC Press, Boca Raton, FL, 79.

TABLE 3.4
Properties of Selected Liquid Desiccants

Desiccant	RH achieved at 21°C (%)	Solution conc. (%)	Operating temperature range (°C)
Sulfuric acid	5–20	60–70	21–49
Triethylene glycol	5–10	70–95	16–43
Sodium hydroxide and potassium hydroxide	10–20	Saturated	29–49
Calcium chloride	20–25	40–50	32–49
Glycerol	30–40	70–80	21–38

Note: The relative humidity (RH) achieved is the range of values measured over the saturated aqueous solution at 21°C.

Source: Phalen, R. F., *Inhalation Studies: Foundations and Techniques,* CRC Press, Boca Raton, FL, 1984, 79.

$$2O_3 \rightarrow 3\ O_2$$

$$CO + 1/2\ O_2 \rightarrow CO_2$$

$$NO + 1/2\ O_2 \rightarrow NO_2$$

$$SO_2 + 1/2\ O_2 \rightarrow SO_3$$

$$SO_3 + H_2O \rightarrow H_2\ SO_4\ (\text{particles})$$

Adsorbants that trap pollutant gases include activated carbon, molecular sieves, and activated alumina. Oxidation can be accomplished by such means as a platinum catalyst bed operated at elevated temperature or a potassium permanganate bed. Potassium permanganate, an excellent oxidizer for many pollutant gases, is available impregnated on activated alumina pellets (Purafil®,

Purafil, Inc.; Doraville, GA), which are composed of a mixture of oxides of copper and manganese.

Removal of organic vapors, other than low molecular weight species, can be accomplished by two means: adsorption onto an agent such as activated charcoal or high-temperature oxidation. One method, attributed to Kushnetz et al. by Nelson,[3] is passage through a 5-cm diameter tube filled with copper shavings maintained at 1250°F. This method requires cooling of the exit gas stream and removal of oxidation products by passage through an acid bubbler, a filter coated with sodium hydroxide, a charcoal bed, and a particle filter.

III. Particle Removal

Removal of particles from a gas stream can be achieved by electrostatic precipitation, thermal precipitation, or filtration. Precipitation methods will not be discussed, as they are seldom used in the laboratory for cleaning air. Air for laboratory use usually is mechanically filtered because of the potential of this method for efficient removal of even the smallest particles and the simplicity of operation.[4] Membrane filters can be efficient in removing particles but often have the undesirable feature of relatively high resistance to air flow (i.e., pressure drop). Fiber filters generally have much lower resistance, and these types of filters are available in forms that have very high capture efficiency for particles of all sizes. One disadvantage of high-efficiency filters is their tendency to "blind" or clog as they become filled with captured particles. This problem is usually dealt with by addition of a lower efficiency (coarse) filter upstream, by pleating the filter to increase its overall surface area, and by continuous measurement of the pressure drop across the filter as an indicator of the need for replacement. High-efficiency filters usually cannot be cleaned, so they are discarded when their pressure drop becomes too high. An excellent practical reference that covers many important design considerations for particle filtering systems is the *Nuclear Air Cleaning Handbook* by Burchsted, Kahn, and Fuller.[5] Much of the following is adopted from this reference. In general, the strict air-filtering requirements established for nuclear facilities also should be met in the inhalation toxicology laboratory.

Final filtering of air is often done with HEPA (high-efficiency particulate air)-type filters. This type of filter (formerly called AEC, CWS, and absolute filter) is a disposable, deep-pleated, dry-type fiber filter in a rigid wood, plastic, or metal case. These filters have very fine inorganic fibers in a matrix of larger fibers. As mentioned in Chapter 2, HEPA filters have very high capture efficiencies, typically 99.9% or more, for removal of submicrometer particles. This efficiency is due to the fact that larger particles are effectively deposited by sedimentation and by interception (i.e., direct contact with filter fibers), while small particles are pushed into contact with the filter fibers by diffusion. HEPA filters are commercially available in a variety of sizes and shapes (see Section VII of this chapter).

Because HEPA filters can clog rapidly when presented with coarse particles and because their replacement cost is relatively high, they are installed behind a relatively inexpensive prefilter. Typically, prefilters include low-efficiency panel filters consisting of oil-coated or adhesive-coated assemblies of coarse fibers (very inexpensive types are available) and moderate and high-efficiency pleated or bag-type dry fiber filters. Low-efficiency filters, including furnace-type units found in the home, are very inefficient in capturing particles and are of limited use for protecting HEPA filters. Medium and high-efficiency filters usually have excellent efficiencies for particles a few micrometers or larger in diameter and are recommended. Selection criteria for prefilters should include their fire resistance and corrosive chemical resistance, as well as their particle capture efficiencies and replacement costs.

IV. Safety Considerations

From the point of view of safety, air cleaning and conditioning systems present a variety of problems. Powerful motors, fans, heavy components, hot surfaces, caustic chemicals, flammable substances, noise, vibration, and heavy electrical usage are some of the factors that must be considered. One appreciates the payoff of good safety practices often only when they are not in place and a serious injury occurs in the laboratory. The following discussion is only a starting point for safety and should not be considered to be all-inclusive.

Adequate space must be provided so that equipment can be worked with and maintained easily and does not get in the way of normal movement of people. Similarly, equipment should be placed in locations where accidental contact is unlikely. When it is impossible to keep hazardous equipment out of the work area, guards (for belts, fans, and switches) and pads (for sharp or hard objects) must be added, along with attention-getting warning labels and signs. An often overlooked aspect of safety is basic neatness. Cluttered, dirty, wet, or oily surfaces can greatly increase the probability of a serious accident. Another often overlooked hazard is noise, which may be stress inducing, for both people and the animal subjects. Excessive noise can permanently degrade hearing and impair concentration and communication. Noise is controlled by selecting quiet equipment, placing noisy items outside of the lab, reducing vibration, using good mounting systems, and applying sound-deadening pads and panels. In addition to these safety considerations, one must consider fire and earthquake safety. The laboratory must be made fire-resistant, and several appropriate extinguishers should be strategically placed. Heavy items must be secured to prevent their falling or tipping over in a large earthquake.

The management aspects of safety should not be overlooked. Personnel must know that safety is an important aspect of their jobs, and explicit safety training should be provided. In addition, safety inspections that include laboratory representatives and discussions about safety at lab meetings should occur regularly.

V. Problems Encountered

Most air pollutants are easy to remove; however, some are not. Nonreactive gases, such as carbon monoxide, may require the use of high-temperature or high-pressure catalyst or adsorbent beds to accelerate oxidation and removal. Contaminants generated by the air-cleaning system itself can be frustrating; some adsorbants are dusty, for example. Reliability is always a problem, especially when equipment and maintenance costs are minimized. Getting adequate space set aside for an air purification system is often difficult. Additional problems are related to maintenance and repairs, especially during an ongoing study when down time is harmful to the research. Potential problems are best dealt with before they occur. In other words, plan ahead, involve experts, and do not sacrifice quality and reliability for cost.

VI. Air Purification and Conditioning Systems

The system configuration for purifying and conditioning air will depend upon several factors, including types and concentrations of initial air contaminants, desired purity, required purified air flow rates and pressures, and acceptable ranges of humidity and temperature of the air. The following two designs, used at the Air Pollution Health Effects Laboratory at the University of California, Irvine, are examples of systems specifically designed for inhalation studies.

A. A Low-Pressure System

The system shown in Figure 3.1 was designed in 1974 by an engineer, William Dennison, to meet the criteria listed in Table 3.5. The system cost at the time, excluding design, was approximately $30,000 installed. This system has provided purified air reliability for more than 20 years.

Ambient air enters this system through a 10-cm diameter pipe from two selectable sources: either from above the laboratory roof or from indoors. Ambient air is first filtered for removal of coarse particles using a disposable, medium-efficiency dry pleated filter. Filtered air is passed through two parallel columns of permanganate-impregnated alumina pellets (Purafil®, Purafil, Inc.; Doraville, GA) 60 cm deep and 30 cm in diameter. The moisture in the inlet gas stream is adsorbed onto the alumina, dissolving the permanganate, which can then oxidize contaminants. This material removes NO, NO_2, NH_3, SO_2, O_3, most hydrocarbons, and some CO from the air. The Purafil® columns are followed by another medium-efficiency pleated filter for removal of potassium permanganate dust. Air exits the filter holder through a 10-cm diameter stainless steel pipe and enters an air temperature-humidity conditioning unit (Bemco PTHS Air Servo, Bemco, Inc.; Pacoima, CA). This unit has a refrigeration system

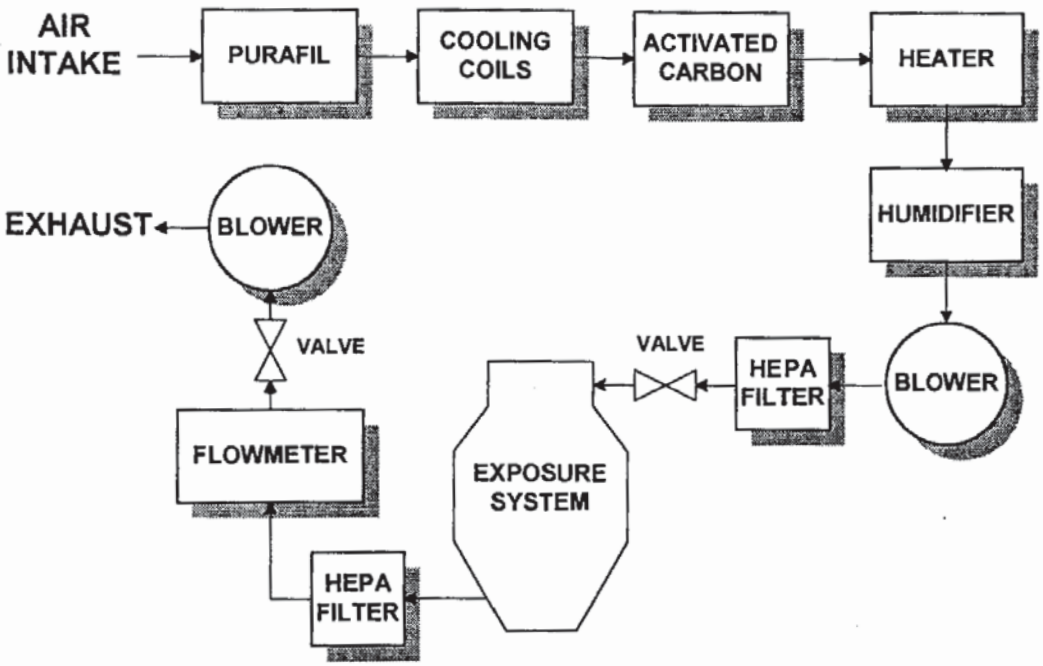

Figure 3.1
Low-pressure air purification system used to supply four Rochester-type, 1-m^3 volume exposure chambers.

TABLE 3.5
Design Parameters for an Air Purification System Used to Supply Air to Four, 1-m^3 Volume, Rochester-Type Exposure Chambers

Contaminant	Probable maximum inlet concentration (ppm)	Desired outlet concentration (ppm)
Nitric oxide	1	0.01
Nitrogen dioxide	1	0.01
Hydrocarbons (as C_2H_4)	100	0.5
Carbon monoxide	100	2
Sulfur dioxide	1	0.05
Ozone	0.5	0.01
Ammonia	10	0.002

Note: Maximum air flow: 100 standard ft^3/min. Desired air temperature: 72 ± 3°F. Desired air humidity: 35–95% RH, controllable. Particles: 99.97% removal for 0.3 μm diameter.

Source: Phalen, R. F., *Inhalation Studies: Foundations and Techniques*, CRC Press, Boca Raton, FL, 1984, 83.

that cools the air to about 35°F, which adjusts the water-vapor content of the air to a maximum saturation value at 35°F. An activated charcoal filter further reduces the levels of hydrocarbons. A 100-W electrical heater warms the air, and two additional adjustable 1500-W immersion heaters vaporize distilled

water and add steam to the air to increase the humidity to the desired level. Automatic temperature and humidity controllers, or manual adjustments, are used to control the heaters to maintain the desired relative humidity in the exit air stream. Purified, conditioned air flows through a 10-cm pipe having a manually operated butterfly valve and passes through a manifold pipe system to the top inlet of four exposure chambers. The valve is used to adjust the total output of the air-purifying/conditioning unit. Each chamber is preceded by a HEPA filter and a butterfly valve. When desired, pollutants are injected into the air just downstream of the HEPA filter. Air flows downward through the chambers and exits through a prefilter and HEPA filter, followed by another butterfly valve. Four blowers on the roof pull air through the four chambers and exhaust it to the atmosphere. The butterfly valves for each chamber are used to adjust the air flows and chamber pressures.

B. A High-Pressure System

The second system (Figure 3.2) was designed by another engineer, Robert Walters, in 1979, after several years of experience with the previous system. Design criteria were similar, but a system that operated at higher pressure was sought in order to achieve lower humidities, to further decrease levels of ambient pollutants in the chambers, and to solve other minor problems. Outdoor air is first filtered and pressurized to 100 lb/in.^{2} using a liquid-ring (water) compressor (Nash Model CD663C; Norwalk, CN). Use of a reciprocating-type air compressor would have allowed higher system pressures (up to 5000 lb/in.^{2}) but would have meant a higher maintenance burden, reduced reliability, oil-vapor contamination of the compressed air, and the possibility of CO formation due to compressor lubricant breakdown. Further, Doyle et al.[6] had shown the liquid-ring compressor to be practical for use in high-pressure air purification systems. Water-saturated air leaving the receiver is filtered to remove water droplets and other particles and is passed through a 31-cm diameter by 80-cm deep bed of permanganate-impregnated alumina pellets (Purafil®). The unit efficiently removes SO_2, NO_x, O_3, and some hydrocarbons from the pressurized airstream. Further purification and drying of the airstream is next accomplished in activated alumina-filled heatless dryer columns (Deltech Engineering Corp.; New Castle, DE) operated in a pressure-swing desorption regenerating mode. In this operation, high pressure air is dried by passage through one drying column, while a portion of this dried air is simultaneously passed through a second idling column at atmospheric pressure to desorb moisture and contaminants. This enables the idling column to act as the drying column in the next cycle. Drying of the pressurized airstream to less than 0.1 mg/*l* water content improves the adsorption performance of the downstream activated carbon bed and is essential to prevent water vapor poisoning of the following unit, a fixed Hopcalite® bed (Deltech Engineering Corp.; New Castle, DE) operating at ambient temperature to remove carbon

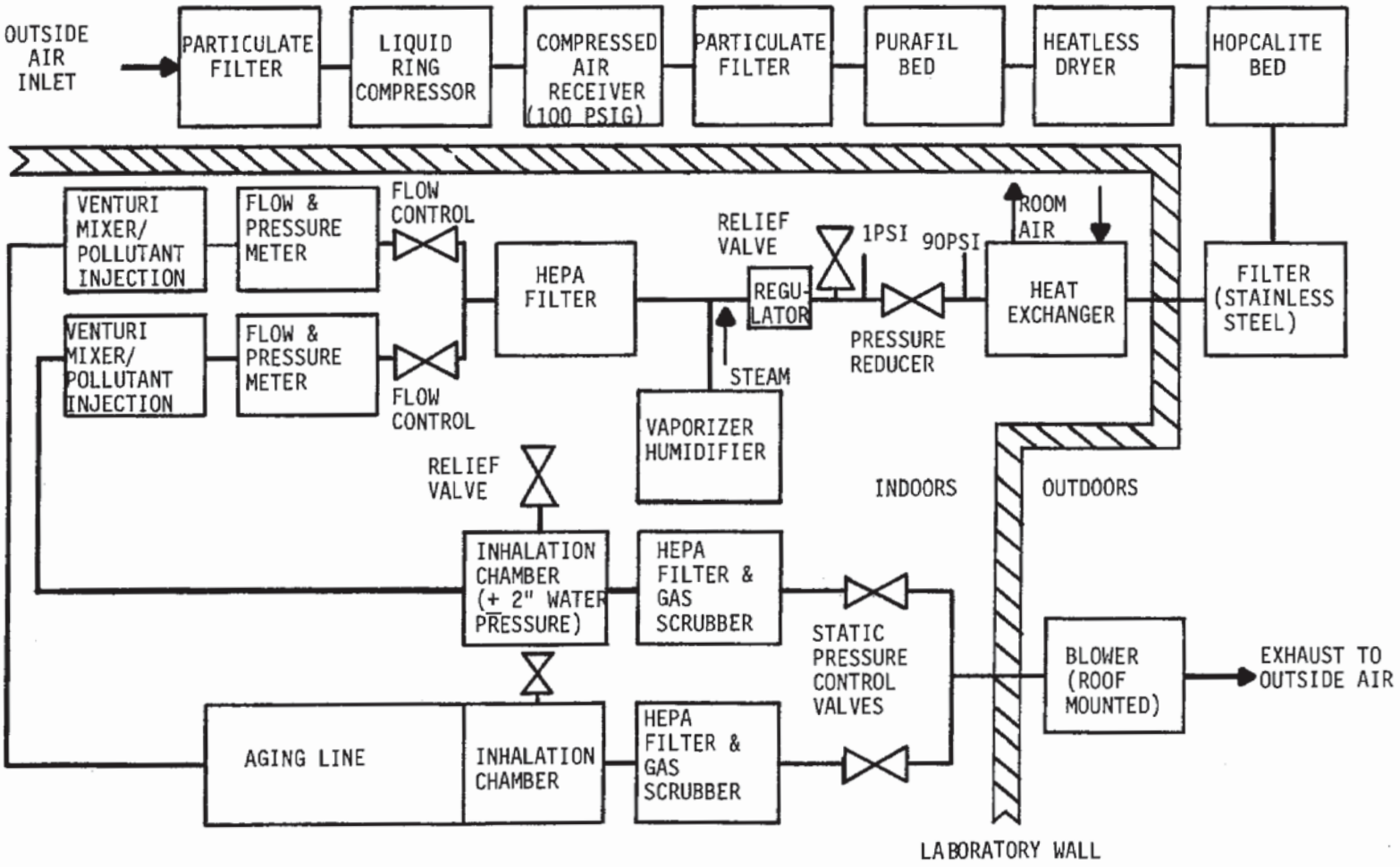

Figure 3.2
High-pressure air purification system used to supply two 1-m^3 volume chambers. (From Phalen, R. F., *Inhalation Studies: Foundations and Techniques*, CRC Press, Boca Raton, FL, 1984, 84.)

TABLE 3.6
Contaminant Removal by High-Pressure Air Purification System[a]

Compound	Ambient conc.	Purified air conc.	Measurement instrument
O_3	0–0.2 ppm	<0.01 ppm	Dasibi® Model 1003-AH Ozone Monitor
SO_2	0–1.0 ppm	<0.01 ppm	Teco® Model 43 SO_2 Analyzer
CO_2	0.04%	0.02%	Perkin-Elmer® #1100 Medical Mass Spectrometer
N_2	78.3%	78.3%	Perkin-Elmer® #1100 Medical Mass Spectrometer
O_2	21.0%	21.0%	Perkin-Elmer® #1100 Medical Mass Spectrometer
CO	0–30 ppm	<1.0 ppm[b]	Ecolyzer® Model 2000 CO Analyzer
NO	0.02 ppm	<0.01 ppm[b]	Beckman® Model 952 NO_x Analyzer
NO_2	0.08 ppm	0.04 ppm	Beckman® Model 952 NO_x Analyzer
CH_4	1.4 ppm	1.4 ppm	Beckman® Model 6800 Gas Chromatograph
C_2H_6	6.3 ppb	7.1 ppb	Beckman® Model 6800 Gas Chromatograph
C_2H_4	5.1 ppb	<2 ppb[b]	Beckman® Model 6800 Gas Chromatograph
C_2H_2	4.7 ppb	<2 ppb[b]	Beckman® Model 6800 Gas Chromatograph
C_3[c]	0.46 ppm	0.20 ppm	Beckman® Model 6800 Gas Chromatograph
Particulate	10^4–10^5 cc^{-1}	<100 cc^{-1}	Environment-One® Rich 100 Condensation Nuclei Counter

[a] Measured at system flow rates of 600 to 1200 std. liters min^{-1}.

[b] Lower detection limit for compound.

[c] Hydrocarbons with three or more carbon atoms.

Source: Phalen, R. F., *Inhalation Studies: Foundations and Techniques*, CRC Press, Boca Raton, FL, 1984, 85.

monoxide. This dryer/adsorption unit was designed originally for the purification of compressed breathing air (for scuba diving and other applications).

After passage through activated charcoal to remove heavier hydrocarbons, the airstream is passed through a filter to remove entrained dust and then is brought to indoor laboratory temperature using an air/air heat exchanger (similar to an automobile radiator in design). Delivery of the air to inhalation chambers follows air pressure reduction, humidification, and final high efficiency (HEPA) particle filtration. The pollution removal performance of the completed system for several common ambient pollutants was evaluated by monitoring ambient and processed air. The results are presented in Table 3.6. This performance is more than acceptable for conducting inhalation studies, even in an urban setting that has significant levels of air pollutants.

Useful air purification systems have been described by Doyle et al.,[6] Barsocchi and Knobel,[7] and Roehlich and Rodgers.[8] Doyle's system, a forerunner of that shown in Figure 3.2, was developed for purification and

humidification of air for atmospheric chemistry research at the University of California, Riverside. Barsocchi and Knobel's design was intended for the filling of high-pressure cylinders of dry, zero (very low contaminant) air. The air purifier of Roehlich and Rodgers was developed for the purpose of removing automotive exhaust from the breathing air in working areas subject to heavy vehicular traffic. All of these systems are good basic designs upon which to draw for inhalation studies.

VII. Suppliers of Equipment

A. Gauges, Meters, Fittings, Tools, Controllers, etc.

McMaster-Carr Supply Co.
P.O. Box 54960
Los Angeles, CA 90054-0960

Fisher Scientific
711 Forbes Avenue
Pittsburgh, PA 15219-4785

VWR Scientific
P.O. Box 7900
San Francisco, CA 94120

Cole-Parmer Instrument Co.
625 East Bunker Court
Vernon Hills, IL 60061

B. Filters, Air Purifiers, Air Dryers, Gas Scrubbers

Deltech Engineering Corp.
Century Park
P.O. Box 667
New Castle, DE 19720

Airotech, Inc.
Boyle Center
120 Ninth Avenue
Homestead, PA 15120-1600

CSC
P.O. Box 3, Route 92 East
Bath, NC 27808

AirTech
2007 Raymer Street, Suite S
Fullerton, CA 92633

Purafil, Inc.
2654 Weaver Way
Doraville, GA 30340

Costar
1 Alewise
Cambridge, MA 02140

Filtra Corp.
104 Wagaraw Road
P.O. Box 298
Hawthorne, NJ 07506

Millipore Corporation
80 Ashby
Bedford, MA 01730

Mine Safety Appliances Company
Filter Products Division
P.O. Box 426
Pittsburgh, PA 15230

Gelman Sciences
Air Analysis Division
600 South Wagner Road
Ann Arbor, MI 48103

Deltech Engineering, Inc.
P.O. Box 667
New Castle, DE 19720

Motor Guard Corp.
580 Carnegie Steet
Manteca, CA 95337

VIII. Sample Data Obtained

The contaminant removal efficiencies for the Dennison- and Walters-design air purification systems were shown in Tables 3.5 and 3.6. Such data are excellent for air purification system performance.

References

1. Phalen, R. F., *Inhalation Studies: Foundations and Techniques*, CRC Press, Boca Raton, FL, 1984, chap. 3.
2. Rollins, J.P., Ed., *Compressed Air and Gas Handbook,* Fourth ed., Compressed Air and Gas Institute, New York, 1973.
3. Nelson, G. O., *Controlled Test Atmospheres*, Ann Arbor Science, Ann Arbor, MI, 1972.
4. Dorman, R. G., Filtration, in *Aerosol Science*, Davies, C. N., Ed., Academic Press, New York, 1966, chap. 8.
5. Burchsted, C. A., Kahn, J. E., and Fuller, A. B., *Nuclear Air Cleaning Handbook*, Energy Research and Development Administration Report, ERDA-76-21, available from National Technical Information Service, Springfield, VA, 1970.
6. Doyle, G. J., Bekowies, P. J., Winer, A. M., and Pitts, J. N., Jr., Charcoal-adsorption air purification system for chamber studies investigating atmospheric photochemistry, *Environ. Sci. Technol.*, 11, 45, 1977.
7. Barsocchi, A. T. and Knobel, R., Zero air: selection of a high-volume preparation method, *Am. Lab.*, 12, 81, Feb., 1980.
8. Roehlich, F., Jr. and Rodgers, S. J., Development of an air purifier for personnel cubicles, *Am. Ind. Hyg. Assoc. J.*, 37, 586, 1976.