Lawrence Berkeley National Laboratory
Recent Work

Title
THE SPECTROPHOTOMETRY OF METAL-AMMONIA SOLUTIONS AT LOW TEMPERATURES

Permalink
https://escholarship.org/uc/item/42p6t7v0

Authors
Gold, Marvin
Jolly, William L.

Publication Date
1961-12-01

eScholarship.org Powered by the California Digital Library
University of California

UCRL-9887

UNIVERSITY OF CALIFORNIA

Lawrence Radiation Laboratory
Berkeley, California

Contract No. W-7405-eng-48

THE SPECTROPHOTOMETRY OF METAL-AMMONIA SOLUTIONS AT LOW TEMPERATURES

Marvin Gold and William L. Jolly

December 1961

DISCLAIMER

This document was prepared as an account of work sponsored by the United States Government. While this document is believed to contain correct information, neither the United States Government nor any agency thereof, nor the Regents of the University of California, nor any of their employees, makes any warranty, express or implied, or assumes any legal responsibility for the accuracy, completeness, or usefulness of any information, apparatus, product, or process disclosed, or represents that its use would not infringe privately owned rights. Reference herein to any specific commercial product, process, or service by its trade name, trademark, manufacturer, or otherwise, does not necessarily constitute or imply its endorsement, recommendation, or favoring by the United States Government or any agency thereof, or the Regents of the University of California. The views and opinions of authors expressed herein do not necessarily state or reflect those of the United States Government or any agency thereof or the Regents of the University of California.

The Spectrophotometry of Metal-Ammonia Solutions at Low Temperatures

By Marvin Gold and William L. Jolly

The Department of Chemistry and Lawrence Radiation Laboratory, University of California, Berkeley, California

ABSTRACT

Two types of apparatus are described for measuring the absorption spectra of metal-ammonia solutions with the Cary Model 14 Spectrophotometer. One apparatus was used for dilute solutions at -70°; the other was used for more concentrated solutions and had provision for holding the solutions at any temperature between their boiling points and -70°.

In order to study the species which exist in metal-ammonia solutions, we have designed and used two types of apparatus for measuring the absorption spectra of these solutions. Since such apparatus are of potential value for studying kinetics and equilibria in solutions of metals and other colored species in liquid ammonia (and conceivably for similar studies in other low-boiling solvents), we describe here the apparatus and certain unique aspects of their operation.

The following two facts were of particular concern in the design of the apparatus.

(1) Metal-ammonia solutions have very large extinction coefficients in the infrared. Therefore a very short light path is necessary if one wishes to investigate any but very dilute solutions. A short light path necessarily introduces a problem of mixing, and a procedure must be used which insures homogeneity of the sample. (2) An alkali metal reacts slowly with ammonia to form the corresponding alkali metal amide and hydrogen. This reaction is catalyzed by certain foreign matter such as heavy metals and rust. Because the rate of the reaction increases with increasing temperature, we decided to work at low temperatures in ordinary vacuum line equipment rather than use high pressure equipment at room temperature.

Apparatus I

This relatively simple apparatus (see Figure 1) was made entirely of Pyrex glass except for a wooden support which was cemented with plaster of Paris to the bottom. The support was shaped to fit between the two metal rods in the Cary sample compartment. The optical cell had a light path of about 0.5 mm. and was useful mainly for dilute solutions. The cell was

situated in an evacuated chamber for insulation. Two rotating side arms were attached to the upper part of the apparatus with standard taper joints. A length of 6 mm. tubing, closed at the bottom, dipped into the solution and served as a well for a copper-constantan thermocouple. The outlet near the top was for evacuation of the apparatus.

Operation - Excess ammonium chloride (relative to sodium) was placed in one side arm. A small piece of sodium was cut under oil, rinsed in benzene, and quickly placed in the other side arm. The whole apparatus was then evacuated. The annular space between the vacuum jacket and central tube was filled with dry ice and acetone; then about 40 ml. of ammonia, previously dried over sodium, was distilled into the apparatus. The ammonia ran down the walls, cooling and filling the optical cell. The refluxing ammonia in the cell reached a steady-state temperature of -70°. The apparatus was placed in the sample compartment of the spectrophotometer and the spectrum of the solvent recorded. During the recording, a black cloth was used to cover the apparatus so that no outside light could reach the optics. The sodium was then added by rotating the appropriate side arm. Dissolution and mixing took place rapidly because the solvent was refluxing. When the optical density reached a constant value at a given wavelength (about 5 minutes), the solution was presumed to be homogeneous and its spectrum was recorded.

Apparatus II

The optical cell had a light path of about 0.02 mm and was used for solutions of relatively high concentration. Because efficient mixing is hard to achieve in a cell with such a short light path, the solution was prepared in a make-up cell and then transferred to the optical cell. Two rotating side arms were attached with standard taper joints to the top of

the vessel (see Fig. 2). Except for the quartz optical cell the rest of the vessel was made of Pyrex.

An insulated cold box and cooling arrangement made up the rest of the apparatus. The cold box consisted of an inner box and an outer box, separated by "styrofoam" insulation. The outer box was designed to fit the sample compartment of the spectrophotometer. The lengths, widths and heights of the inner and outer boxes were 5-1/8 x 2-1/2 x 5-1/8 inches and 8-1/2 x 5 x 7-3/8 inches, respectively. Part of the front wall of the sample compartment had to be removed and a slot had to be cut from the bottom of the box in order for the box to rest on the cylindrical rods in the compartment. The windows of the box were 22 mm. quartz tubes, evacuated and sealed off near one end. The spaces between the outer box and the compartment walls were flushed with nitrogen to keep the windows free of moisture. Two wood strips, 3/8" wide, were glued to the box just about the windows in order to exclude light and minimize exposure of the windows to atmospheric moisture. An ordinary fuse clip fastened to the wall of the inner box held the cell in a vertical position and two V-shaped steel knife-edges at the base provided a firm support for the cylindrical optical cell. Two 8 mm. glass tubes extended from outside the box to the inside chamber, one pointing at the optical cell and one at the make-up cell of the vessel. One tube served as an entry for cold nitrogen, the other as an exit. Several pieces of styrofoam, placed around a square piece of cork cemented to the vessel, formed an insulating cover for the box.

Dry H.P. nitrogen was passed through a copper coil immersed in a large Dewar flask of dry ice and acetone. The nitrogen flow was adjusted with the

aid of a flowmeter to maintain temperatures of -45, -55 or -65° in the cold box. Temperature was measured with a Rubicon portable potentiometer and a copper-constantan thermocouple taped to the side of the optical cell.

Operation - The vessel was connected to the vacuum line in a horizontal position. A pellet of ammonium chloride was placed in side arm (A) and a piece of sodium placed in the long tube extending from the make-up cell. (When desired, other materials were added to the solution from side arm (B).) The tube was sealed off near the end and the vessel evacuated and flamed below the cork. The sodium was then distilled to point (C) and the tube sealed off at (D). The make-up cell was immersed in liquid nitrogen and about 3 ml. of dry ammonia were distilled in. The liquid nitrogen was then replaced by a dry-ice-acetone bath and the ammonia allowed to melt. The sodium was dissolved by shaking ammonia into the tube containing the sodium. The vessel was then put in the cold box with the make-up cell still pointing down and the cover pieces were put into place. The cold nitrogen was directed at the make-up cell and the box was cooled to about -60°. The flow was then directed at the optical cell for 10-15 seconds so that it would not be much warmer than the make-up cell. It was important that this cooling not be excessive since if the optical cell were colder than the solution, ammonia would condense between the windows. The box was turned 90°, allowing the solution to run into the optical cell, and then placed in the spectrophotometer sample compartment (see Fig. 3). The flow was again directed at the optical cell and cooling continued to about -70 to -72°, which was the lower limit. The solution was allowed to warm to -65° and the temperature maintained until the optical density remained constant at a given wave-length. The spectrum was then recorded and the procedure repeated to record the spectra at -55° and -45°. It was found that best results were obtained if the solution

was warmed, rather than cooled, to the desired temperature. When cooling, other glass surfaces in the vessel may cool more rapidly than the solution, causing ammonia to condense there and concentrate the solution in the optical cell.

By using a fogged photographic plate as a filter in the reference beam, it was possible to measure optical densities as high as 3.4. This permitted observation of the absorption peak for sodium solutions as concentrated as 0.035 M .

Miscellany - The optical cell was made in the glass shop of this laboratory. During its construction a piece of one mil copper foil was used to separate the two quartz windows which were fused to the cylindrical walls of the cell. The fact that the windows were not exactly parallel and that a portion of the light beam was scattered by the sides of the cell caused the effective light path to vary with concentration. Therefore, we calibrated the cell at several concentrations with alkaline potassium chromate solutions. When optical densities of the 3700A peak were plotted as a function of concentration, the curve showed a negative deviation from Beer's law. The effective light path was found to change by 20% on going from the lowest to the highest observed optical densities. Since chromate ion is known to obey Beer's law, a correction was calculated for each observed optical density and these corrections were applied to the metal-ammonia solution spectra. The infrared source was used for the calibration because the ultraviolet and visible sources do not illuminate the same area of the cell as does the infrared source.

The optical cell was cleaned with hot aqua regia. Rinsing was facilitated by applying a vacuum with the optical cell immersed in boiling water. Every

effort was made to keep insoluble matter from getting into the cell.

All mercury in the vacuum line was closed off from the cell while the ammonia was being distilled. To further insure that no mercury contaminated the solution, some gold foil was placed in the tubing just above the stopcock of the vessel.

Addition of the room-temperature ammonium chloride pellet caused sodium to be splattered onto the walls above the solution. In order to avoid this splattering, the pellet was cooled to the solution temperature with a cold bath immediately before its addition.

Concentration Determination

Identical procedures were used for both apparatus; however, after the spectra were recorded with apparatus II, the vessel was removed from the cold box and the optical cell immediately immersed in a dry ice-acetone bath. The amount of sodium that had reacted with ammonia during the run was determined by pumping off the hydrogen with a Toepler pump and measuring its pressure in a calibrated gas buret. Addition of ammonium chloride resulted in the reaction:

$$NH_4^+ + Na \longrightarrow NH_3 + Na^+ + 1/2\ H_2$$

The total hydrogen evolved was pumped into the gas buret and its pressure measured. Two liquid nitrogen traps were maintained between the solution and Toepler pump to prevent any ammonia from reaching the gas buret. The ammonia was then absorbed in a flask containing 80% sulfuric acid, the flask being weighed before and after the absorption of ammonia. The density of pure liquid ammonia was used to calculate the volume of the solution.

Acknowledgment

This work was supported by the U.S. Atomic Energy Commission.

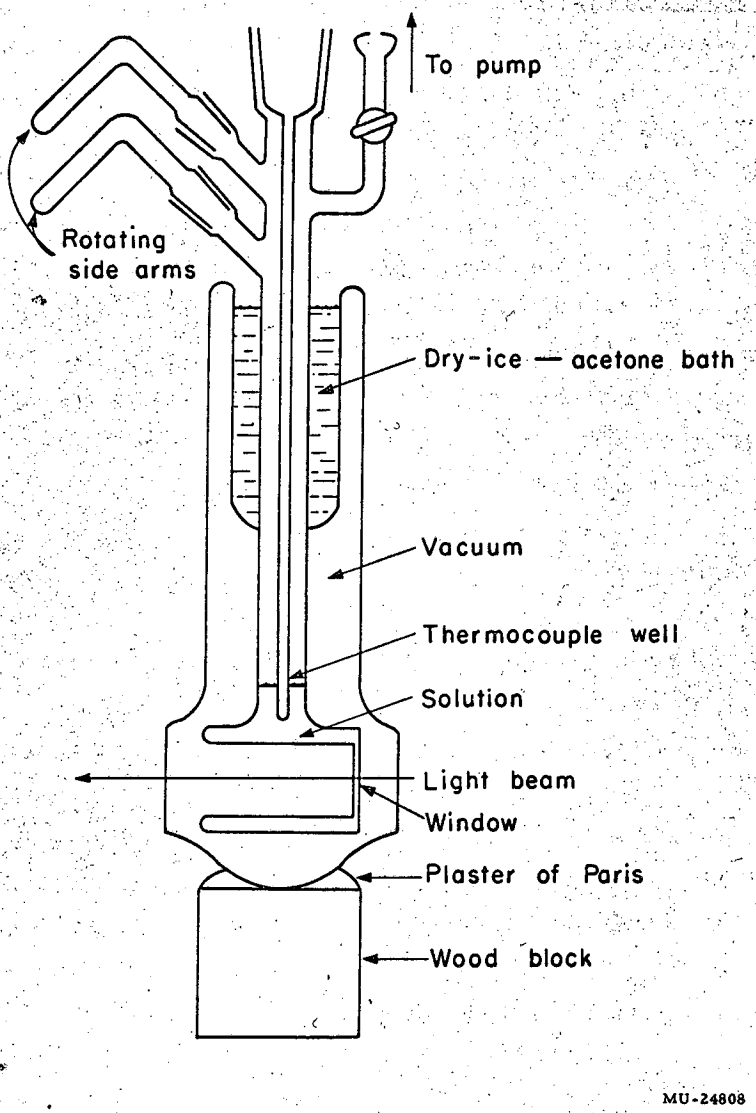

[illegible]
or recordin[illegible]

A - [illegible]
B - [illegible] Paris
C - [illegible] Compartment
D - Warm Nitrogen Inlet
E - Wood Strips
F - Reference Compartment.

Fig. 1. Apparatus I (cross-section).

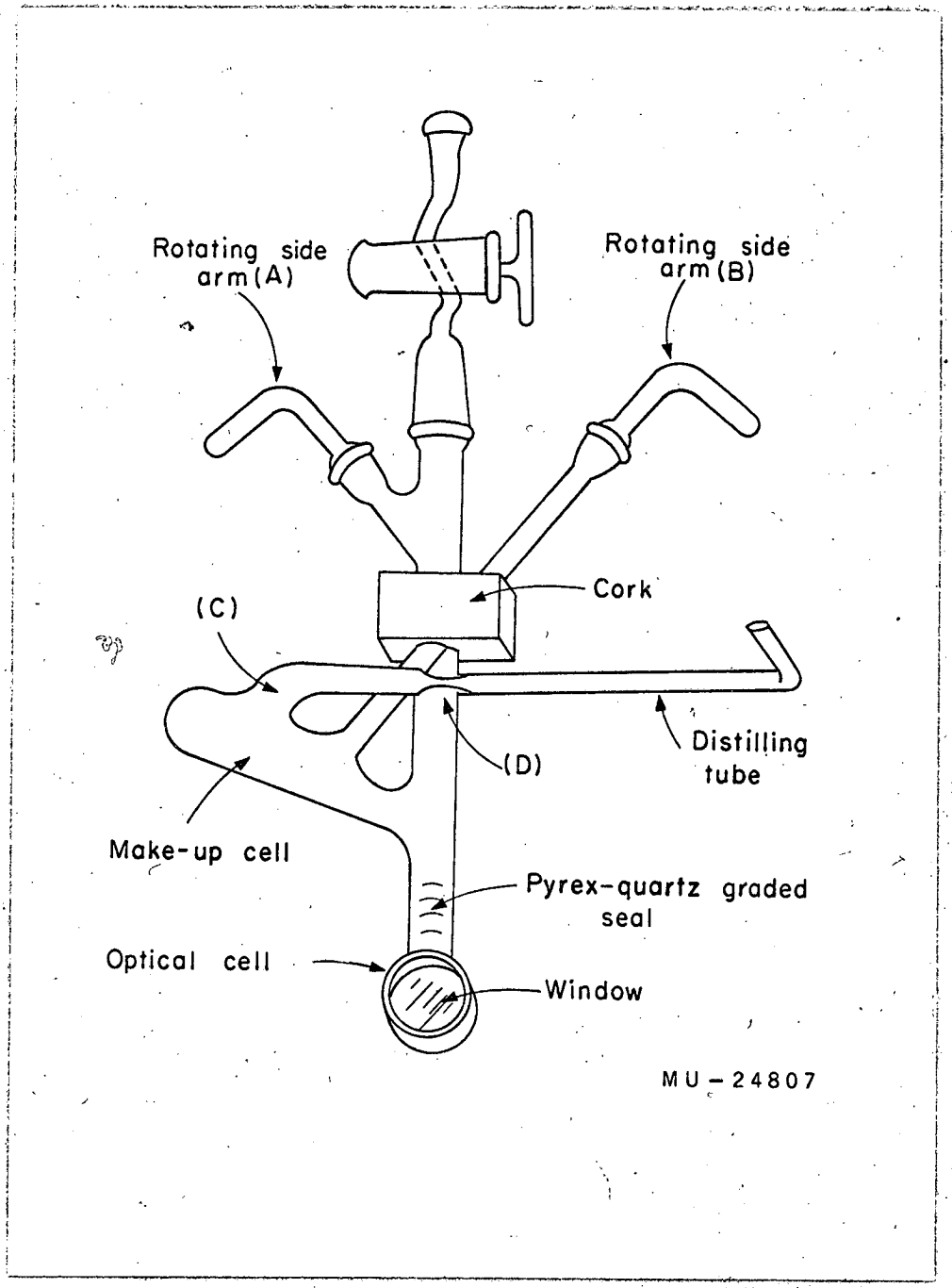

Fig. 2. Vessel of Apparatus II.

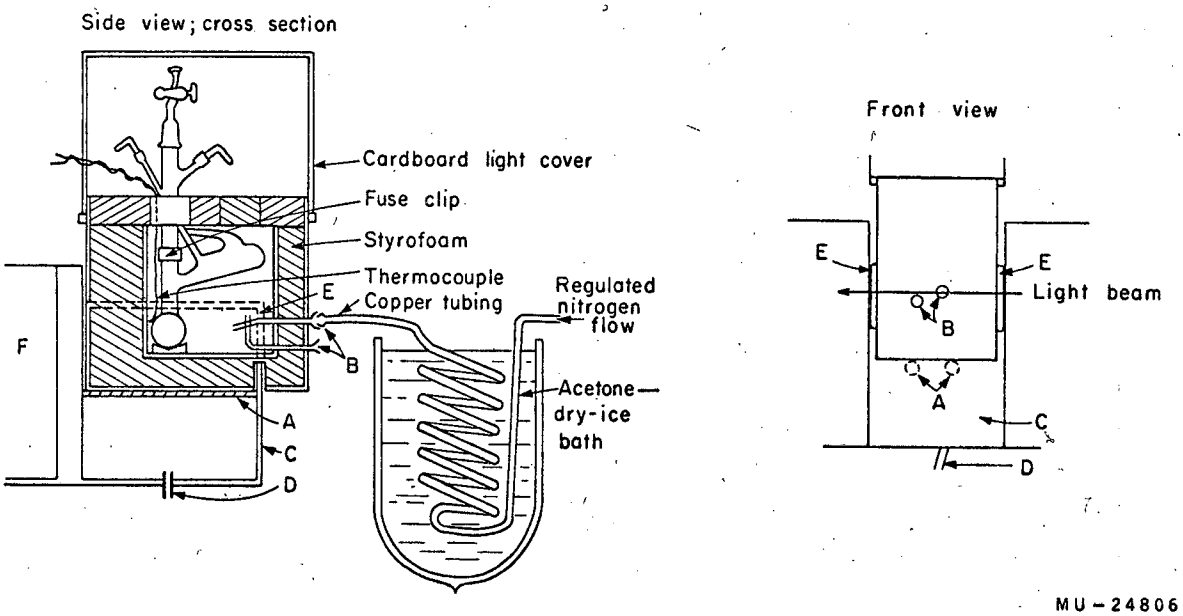

Fig. 3. Apparatus II. Experimental arrangement for recording spectra.

A - Cylindrical Rods
B - Cold Nitrogen Ports
C - Front Wall of Sample Compartment
D - Warm Nitrogen Inlet
E - Wood Strips
F - Reference Compartment