Lawrence Berkeley National Laboratory
Recent Work

Title
A TIME OF FLIGHT MASS SPECTROGRAPH

Permalink
https://escholarship.org/uc/item/54j7w6fk

Author
Glenn, William E.

Publication Date
1952-01-10

eScholarship.org Powered by the California Digital Library
University of California

UCRL- 1628
cy.2

University of California

Ernest O. Lawrence Radiation Laboratory

TWO-WEEK LOAN COPY

This is a Library Circulating Copy which may be borrowed for two weeks. For a personal retention copy, call Tech. Info. Division, Ext. 5545

Berkeley, California

UCRL- 1628
cy. 2

DISCLAIMER

This document was prepared as an account of work sponsored by the United States Government. While this document is believed to contain correct information, neither the United States Government nor any agency thereof, nor the Regents of the University of California, nor any of their employees, makes any warranty, express or implied, or assumes any legal responsibility for the accuracy, completeness, or usefulness of any information, apparatus, product, or process disclosed, or represents that its use would not infringe privately owned rights. Reference herein to any specific commercial product, process, or service by its trade name, trademark, manufacturer, or otherwise, does not necessarily constitute or imply its endorsement, recommendation, or favoring by the United States Government or any agency thereof, or the Regents of the University of California. The views and opinions of authors expressed herein do not necessarily state or reflect those of the United States Government or any agency thereof or the Regents of the University of California.

UCRL-1628
Declassified-Insturmentation Distribution

UNIVERSITY OF CALIFORNIA

Radiation Laboratory

Contract No. W-7405-eng-48

A TIME OF FLIGHT MASS SPECTROGRAPH

William Ellis Glenn, Jr.
(Thesis)

January 10, 1952

Berkeley, California

TABLE OF CONTENTS

	Page
LIST OF ILLUSTRATIONS	3
ABSTRACT	5
Part	
I. INTRODUCTION	6
A. Principle of Operation	7
B. Advantages and Limitations	10
II. ANALYSIS OF OPERATION	13
A. Resolving Power and Stability	16
B. Transmission	19
C. Harmonic Elimination	22
III. CONSTRUCTION OF THE INSTRUMENT	28
A. Pulse Generator Circuit	28
B. Saw-Tooth Generator	31
C. Blanking Pulse Generator	34
D. Pulsed Voltage Regulator	37
E. Repeller Grid Voltage	40
F. Accelerating Voltage Measurement	40
G. Ion Source	42
H. Grid Construction	47
I. Collection Assembly	49
J. Charge Neutralization	57
IV. TYPICAL OPERATING PROCEDURE	59
A. Calibration Procedure	59
B. Operating Procedure	62
V. RESULTS	63
A. Resolution	63
B. Stability	63
C. Transmission	66
D. Harmonic Elimination	67
E. Collector Current	67
F. Isotope Separation	67
VI. CONCLUSIONS	70
ACKNOWLEDGMENTS	71

LIST OF ILLUSTRATIONS

Figure		Page
1.	Block diagram of time-of-flight mass spectrograph	8
2.	Axial magnetic field harmonic eliminator	25
3.	Wave form of the blanking pulse	27
4.	Circuit diagram of the gate pulse generator	29
5.	Photograph of the gate pulse wave form displayed on a cathode-ray oscilloscope	30
6.	Circuit diagram of the frequency divider	32
7.	Circuit diagram of the saw-tooth voltage generator and ion source	33
8.	Photograph of the saw-tooth voltage wave form displayed on a cathode-ray oscilloscope	35
9.	Circuit diagram of the blanking pulse generator	36
10.	Photograph of the blanking pulse displayed on a cathode-ray oscilloscope	38
11.	Circuit diagram of the pulsed voltage regulator and accelerating voltage measuring circuit	39
12.	Repeller grid voltage supply and accelerating voltage supply	41
13.	Block diagram of circuit interconnections	43
14.	Photograph of front panel of circuits used in the mass spectrograph	44
15.	Cross section of source, field rings, and bunching grids	45
16.	Photograph of ion source, field rings, and bunching grids	46
17.	Diagram of grids before pressing	48
18.	Photograph of a completed 1 3/4 inch grid	50

LIST OF ILLUSTRATIONS (Cont.)

Figure		Page
19.	Cross section of gate grids, repeller grid, and electron multiplier	51
20.	Trajectories of particles in collection system . . . . . A. Positive ions of wrong mass B. Positive ions of mass to be detected C. Paths of secondary electrons knocked out by positive ions D. Paths of positive ions knocked out by high energy neutral atoms	54
21.	Circuit diagram and cross section of dual isotope collection system	56
22.	Photograph of the mass spectrograph vacuum chamber . . .	58
23.	Outline of the instrument showing the positions of the controls	60
24.	Reproduction of current vs. mass curve of rubidium made with the mass spectrograph	64
25.	Reproduction of current vs. mass curves of rubidium (left) and cesium (right) made with the mass spectrograph . . .	65
26.	Top: Reproduction of current vs. mass curve of rubidium without the harmonic eliminator Bottom: Reproduction of current vs. mass curve of rubidium with the harmonic eliminator	68

A TIME-OF-FLIGHT MASS SPECTROGRAPH

William Ellis Glenn, Jr.
Radiation Laboratory and Department of Electrical Engineering
University of California, Berkeley, California

nuary 10, 1952

ABSTRACT

A mass spectrograph has been designed and constructed which measures e/m by measuring the time-of-flight of ions that have been accelerated and bunched by electrostatic fields. This instrument is similar to the Smyth and Wilson "Isotron." It has been able to collect about 20 percent of the ions formed of a given isotope. The resolution is such that the width of the intensity versus mass peaks is 3/4 of a mass unit wide at 1 percent of the maximum intensity for all masses. The stability and linearity of the mass calibration is accurate to less than 1/10 of a mass unit. Experimental determinations of the transmission, resolution, and calibration were made with rubidium, cesium, and thallium. Methods of detection include the use of an electron multiplier and vibrating reed electrometer. Methods of eliminating the direct, neutral beam and ions of the wrong transit time have been devised. The instrument can be used for the isolation of individual artificially produced radioactive isotopes and some preliminary experiments of this type have been performed.

A TIME-OF-FLIGHT MASS SPECTROGRAPH

William Ellis Glenn, Jr.
Radiation Laboratory and Department of Electrical Engineering
University of California, Berkeley, California
January 10, 1952

I. INTRODUCTION

Until recently the usual method of measuring the charge-to-mass ratio of an ion has been through observing its trajectory in a combination of an electrostatic and magnetic field. The author has proposed a new type of mass spectrograph which measures the charge-to-mass ratio of an ion by its transit time when acted on by electrostatic fields alone. The following thesis will discuss the advantages and limitations of the instrument as compared with conventional mass spectrographs, its theory of operation, construction, and experimental results.

A limited amount of work has been done using time-of-flight for the measurement of e/m. A radio frequency mass spectrograph has been designed by Bennett at the Bureau of Standards[1] which uses the principle of time-of-flight with electrostatic fields. This spectrograph, however, has a lower transmission, for the same resolution, than the proposed instrument by several orders of magnitude. The term "transmission" is used to denote the percentage of the ions formed that are collected.

Another instrument designed by Goudsmit[2] uses time-of-flight in a magnetic field. This instrument has been able to attain very high resolving power, but has extremely low transmission.

---

[1] Willard H. Bennett, "A Radio Frequency Mass Spectrometer," National Bureau of Standards Technical News Bulletin 32, 105 (1948).

[2] Samuel A. Goudsmit, Physical Review 74, 622 (1948).

The proposed instrument is somewhat similar to the "Isotron" invented by Smythe and Wilson at Princeton.[3] It, however, yields much better resolution than the "Isotron" with no loss in transmission and uses circuits that are much simpler.

A. Principle of Operation

A block diagram of the time-of-flight mass spectrograph is given in Fig. 1. A brief description of its operation is as follows.

The saw-tooth bunching voltage is applied between the grids B-B' and a gate pulse is applied between the grids G'-G. A D.C. accelerating voltage is applied to the source S and a retarding voltage applied to the repeller grid R. The ions to be analyzed are formed at the source S and are accelerated by a D.C. accelerating voltage V to the first buncher grid B. As the ions cross the gap between the buncher grids B-B', they are accelerated by the saw-tooth voltage appearing across it. The ions then enter the drift tube. Those that leave the buncher in the early part of the saw-tooth cycle have lower velocity and those later achieve higher velocity. All ions of a given mass will consequently reach the gate grids G'-G at the same time. Ions will reach these grids in bunches at a time corresponding to their mass. If the ions are of the mass to be separated, they will appear between the gate grids during the pulse applied between them and gain energy. Since the repeller grid R is at a higher potential than the source, only ions that have gained energy between the gate grids can pass through it. These ions are then collected on the collector plate C and the resulting current

---

[3] Henry D. Smyth, "Atomic Energy for Military Purposes," Princeton University Press, Princeton, 1945.

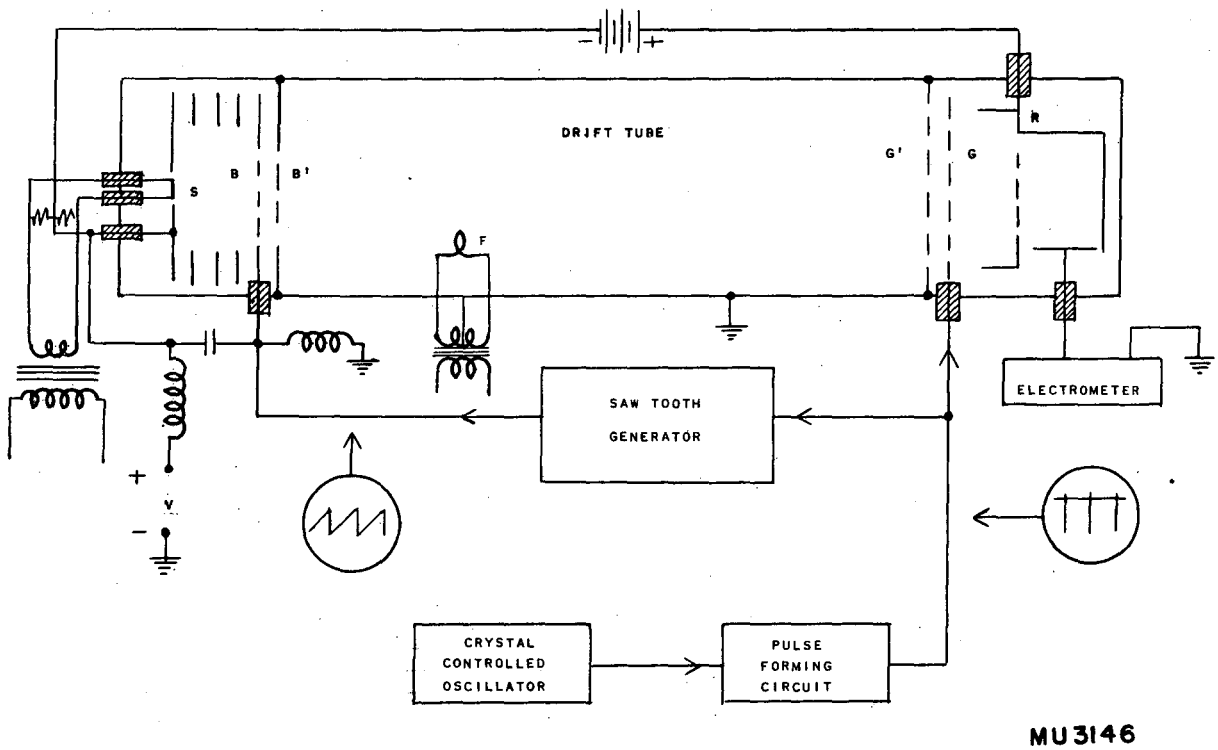
DRIFT TUBE
S
B
B'
F
G'
G
R
SAW TOOTH
GENERATOR
ELECTROMETER
V
CRYSTAL
CONTROLLED
OSCILLATOR
PULSE
FORMING
CIRCUIT
MU3146

Fig. 1

flow is measured by an electrometer. When the instrument is used as a separating device, the collector plate is removed after the desired material has been deposited on it. The ions of the wrong mass are repelled back into the drift tube and land on its walls.

In the instrument that has been built the transit time (and consequently the master oscillator frequency) is held constant and the accelerator voltage V is adjusted so that the ion to be separated has the correct transit time. This system provides a linear scale, since the mass separated is directly proportional to the accelerating voltage. It also has an approximately constant resolution in mass units for all masses. The proportional accuracy is better for higher masses since the thermal energy of the ions is a smaller fraction of the higher accelerating voltage.

In some applications it may be desirable to hold the accelerating voltage constant and vary the transit time (consequently the frequency). In this case the transit time is proportional to the square root of the mass collected. If a variable oscillator were used the mass would be directly proportional to either the capacitance or inductance in the tuned circuit. This system would have a constant percentage resolution. For reasons that will be discussed later, the transit time is selected to be forty times as long as the time between cycles of the oscillator that generates the gate pulses and saw-tooth voltage. The gate pulse that selects the ions of the proper transit time is consequently the fortieth pulse after the one occurring at the beginning of the saw-tooth that bunched these ions. It is possible also for ions which arrive during the 39th pulse, or any other integral number, to be collected.

In the subsequent discussions all ions which are collected with some integral transit time other than forty cycles will be called "harmonics." In many applications these harmonics can be tolerated. Methods have been devised to eliminate them for applications where it is necessary to remove this source of ambiguity. These methods will be discussed later.

B. Advantages and Limitations

A comparison between the time-of-flight mass spectrograph and the conventional magnetic type will now be presented briefly.

1. Stability.-- The magnetic mass spectrograph has the following variables in determining the e/m of an ion:

(a) length

(b) accelerating voltage

(c) magnetic field.

The time-of-flight instrument has the variables:

(a) length

(b) accelerating voltage

(c) frequency.

Items (a) and (b) of the two instruments are the same and are relatively easy to control with a high degree of accuracy. In the time-of-flight instrument, however, the magnetic field variable is replaced by a frequency which can be accurately controlled by a crystal oscillator. Not only is a magnetic field hard to regulate and measure - it is also not linearly variable in a single valued manner because of hysteresis of the core.

2. Calibrations.-- In the magnetic mass spectrograph absolute calibration is difficult because of the difficulty in measuring the

magnetic field and in taking into consideration fringing fields. If the magnetic field is changed to control the mass detected, the field must vary as the square root of the mass. If the field strength is determined by measuring the magnet current, hysteresis and saturation of the core must be considered.

In the time-of-flight mass spectrograph the variables of length, voltage, and frequency are readily measured to a high degree of accuracy. Nonlinearities equivalent to hysteresis and saturation are not present. If the mass to be measured is selected by varying the frequency, it is possible to have a linear relation between the mass and capacitance or inductance of the oscillator.

In either instrument a direct proportionality exists between the accelerating voltage and mass if the magnetic field or frequency is held constant.

3. Transmission.-- In the magnetic instrument the ions must pass through a narrow slit if high resolution is to be obtained. The fraction of the ions transmitted through this slit may be increased by having a very small source. Even so, usually less than 1 percent of the ions formed are collected. The remaining 99 percent or more hit the slit plate.

In the time-of-flight mass spectrograph there are no slits. The source may be very large without reducing transmission. The transmission is limited, for the most part, by the transparency of the grids. Under ideal conditions as much as 75 percent of the ions formed can be collected. Other factors, which will be discussed later, may reduce this value somewhat. In practice, therefore, a transmission of about 25 percent is usually obtained.

4. Weight and Expense.-- Since the time-of-flight instrument has no magnet, it is much lighter and less expensive to manufacture than the conventional mass spectrograph. Its greatly reduced weight makes it more practical for semi-portable use.

5. Other Factors.-- The physical simplicity of the time-of-flight instrument makes it easier to decontaminate when working with radioactive samples.

The magnetic instrument lends itself more readily to the collection of several masses simultaneously. A system for doing this with the time-of-flight mass spectrograph has been devised. However, it is rather cumbersome.

The time-of-flight instrument has so-called "harmonics" under normal high transmission operation which are not present in the magnetic instrument. A method will be described later for the elimination of these but with a reduction of transmission to a value comparable to the magnetic instrument. Elimination of harmonics with high transmission is possible but difficult.

The upper (space charge) limit of beam current for reasonable sizes is about the same for the 60° magnetic instrument and the time-of-flight mass spectrograph. The 180° magnetic mass spectrograph can handle considerably higher currents since the entire trajectory is in the magnetic field and a plasma of electrons is set up along the ion path which tends to neutralize space charge effects.

II. ANALYSIS OF OPERATION

A mathematical analysis of the acceleration, bunching, and mass separation will now be considered.

Let t = time of leaving buncher grids in seconds

τ = time of arrival at gate grids in seconds

L = distance between buncher and gate grids in cm

v = velocity of ions in cm/sec

V = accelerating voltage in volts

m = mass of ion in mass units (for O^{16} $m = 16$)

It is desired to find what accelerating voltage V is required for any ion leaving the buncher grids at time t such that they will all reach the gate grid at time τ. The ions will be assumed to be singly charged and of mass m.

The transit time = $\tau - t$.

The velocity $v = \frac{L}{\tau - t}$.

$$\text{Also (1)} \quad v' = \sqrt{\frac{2eV}{m'}}$$

where e = charge in coulombs

V = accelerating voltage in volts

m' = mass in kilograms

v' = velocity in meters/sec

or applying appropriate constants:

$$\text{(2)} \quad v = 1.396 \times 10^6 \sqrt{\frac{V}{m}}$$

$$\text{thus} \quad \frac{L}{\tau - t} = 1.396 \times 10^6 \sqrt{\frac{V}{m}}$$

$$\text{or (3)}\ \frac{V}{m} = 5.11 \times 10^{-13} \left(\frac{L}{\tau}\right)^2 \left(\frac{1}{1-t/\tau}\right)^2 .$$

Expanding in series:

$$(4)\ \frac{V}{m} = 5.11 \times 10^{-13} \left(\frac{L}{\tau}\right)^2 \left(1 + 2\frac{t}{\tau} + 3\left(\frac{t}{\tau}\right)^2 + 4\left(\frac{t}{\tau}\right)^3 + \ldots\ldots\right)$$

for $t/\tau \ll 1$ the voltage per mass unit is approximately:

$$(5)\ \frac{V}{m} = 5.11 \times 10^{-13} \left(\frac{L}{\tau}\right)^2 \left(1 + 2\frac{t}{\tau}\right) .$$

This represents a D.C. voltage plus a linearly rising voltage. If the wave form is repeated with a period t' this represents a D.C. accelerating voltage plus a saw-tooth voltage.

Consider now for example:

$$t' = \frac{1}{40}\,\tau$$

and let:

$$-\frac{\tau}{80} \leq t \leq \frac{\tau}{80} .$$

For the lower limit the series in (4) (neglecting the constants) becomes

$$1 - \frac{2}{80} + \frac{3}{6400} - \ldots\ldots$$

and the upper limit becomes

$$1 + \frac{2}{80} + \frac{3}{6400} + \ldots\ldots$$

The third and higher terms, which are neglected in the wave form, then cause an error of approximately 1/2130 of the voltage (or mass) for both limits. This is far greater accuracy than is needed to separate mass 250 from 251.

A similar analysis taking

$$t = \frac{1}{30}\tau$$

gives an error of 1/1200 which is still small enough to be neglected.

In this instrument t/τ is taken as 1/40 rather than 1/30 since the saw-tooth voltage required is smaller.

By substituting values in equation (5) the magnitude of the voltage required per mass unit is obtained. The drift tube length was chosen at a reasonable value and the remaining variables are a function of this.

Repetition frequency = 2.2 mc/sec

$t' = 0.455$ μsec

$\tau = 40 \times 0.455 = 18.2$ μsec

$L = 66$ cm

$$\frac{V}{m} = 5.11 \times 10^{-13} \left(\frac{66}{18.2 \times 10^{-6}}\right)^2$$

$$= 6.76$$

V at mass 250 will be:

$$V = 250 \times 6.76 = 1690 \text{ volts.}$$

The saw-tooth peak-to-peak voltage will then be:

$$V_{st} = \frac{6.76}{20} m = 0.338m.$$

V_{st} at mass 250 will be:

$$V_{st} = 250 \times 0.338 = 84.5 \text{ volts.}$$

A. Resolving Power and Stability

It is now desirable to consider all of the possible sources of error in mass determination. The most important of these is the thermal energy distribution as the ions leave the source.

About 1 percent of the ions have energies greater than 6.5 times the most probable energy.[4]

Also energy = KT.

At room temperature the most probable thermal energy is about 1/30 electron volt. Therefore, at 2000°C (the maximum source temperature) 1 percent of the ions will have energies above:

$$\frac{1}{30} \times 6.5 \times \frac{2000}{300} = 1.45 \text{ electron volts.}$$

Since this may be in either the positive or negative direction, the voltage spread may be considered to be about 3 electron volts. For V/m = 6.76 this amounts to about

$$\frac{3}{6.76} \approx \frac{1}{2.2}$$

mass unit. At mass 250 the fractional error will be

$$\frac{3}{1690} = \frac{1}{563} .$$

Another source of error is the nonlinearity of the saw-tooth voltage. At 2.2 megacycles it is difficult to make a saw-tooth voltage with an inaccuracy much less than 2 percent. This amounts to an accelerating voltage error of

$$\frac{0.02}{40} = \frac{1}{2000} .$$

---

[4] Karl R. Spangenberg, "Vacuum Tubes," McGraw-Hill Book Co., Inc., New York, 1948, p. 751.

(The maximum saw-tooth voltage is 1/40 of the accelerating voltage.)

Another source of error is the finite width of the gate pulse. The effective width of the gate pulse is about 1/100 μsec. This will give an error in transit time of about 1/1800 or a voltage variation of

$$(1 + \frac{1}{1800})^2.$$

This amounts to an error of about 1/900.

The gate grids are constructed of 1 mil (0.001 inch) wires, 8 mils apart. They are spaced 8 mils between the grid planes. Including fringing, the effective gap between grids is approximately

$$15 \text{ mils} = 1/2.62 \text{ mm}.$$

This represents an error in drift length of this value. This will then give a length error of

$$\frac{1}{660 \times 2.62} \cong \frac{1}{1730}.$$

This corresponds to a variation in mass of

$$(1 + \frac{1}{1730})^2$$

or an error of 1/865.

Using an analogy to the summations of standard deviations in statistics it will be assumed that as a rough approximation all of the errors add as the square root of the sum of the squares.

A tabulation of the errors is as follows for mass 250:

$$\text{bunching error (with } \frac{t'}{\tau} = \frac{1}{40}) = \frac{1}{2130}$$

$$\text{thermal error} = \frac{1}{563}$$

$$\text{saw-tooth voltage error} = \frac{1}{2000}$$

$$\text{gate pulse error} = \frac{1}{900}$$

$$\text{length error} = \frac{1}{865} .$$

The summation of errors will then be approximately:

$$\Delta = \sqrt{(\frac{1}{2130})^2 + (\frac{1}{563})^2 + (\frac{1}{2000})^2 + (\frac{1}{900})^2 + (\frac{1}{865})^2}$$

$$= \frac{1}{405} = 0.62 \text{ mass units.}$$

This is well within the accuracy needed to separate adjacent masses.

Other sources of error or instability that are negligibly small are:

(a) Loss of energy due to collision with gas molecules in transit. If the pressure in the vacuum system is 10^{-6} mm Hg or lower, this error is quite negligible. At a pressure of 10^{-5} mm Hg or higher, a "tail" has been observed on the high mass side of the intensity vs. mass peaks due to the collision of ions with gas molecules.

(b) Stability of the accelerating voltage.

An accelerating voltage stability better than 0.1 percent is required for a mass error of less than 1/1000. This can be obtained with a

well-regulated power supply that is adequately filtered. By using a potentiometer and standard cell, the accelerating voltage can be measured to an accuracy greater than this.

(c) Stability of frequency.

The oscillator must have a stability of better than 0.05 percent for an error in mass of less than 1/1000. Greater stability is easily obtained with a crystal oscillator.

(d) Stability of drift distance.

The length of the drift tube and the length of the different paths down the tube must be the same to an accuracy of better than 0.05 percent for an error in mass of less than 1/1000. This accuracy is easily obtained. Thermal variations in length are quite negligible. Variations in path length are much less than this if the gate grids have a diameter less than 1/15 the drift length and if the gate grids are perpendicular to the axis of the beam to within $1/2^{\circ}$.

B. Transmission

Since one of the main advantages of this instrument is its high transmission, an evaluation of the factors affecting this will now be considered.

1. Grid Transparency.-- An obvious source of loss of transmission is the imperfect transparency of the bunching and gate grids. The grids, in this instrument, are constructed of 1 mil wires 7.8 mils apart. Each grid will therefore have a transparency of 87.2 percent. Since the ions must go through four grids, the total transparency of the system will be $(0.872)^4$ or 57.5 percent. If 1/2 mil grid wires were used with the same spacing, the total transparency would be 76.8 percent.

2. Transverse Thermal Velocities.-- As was demonstrated earlier, about 1 percent of the ions at 2000°C have an energy over 1.5 electron volts. Since these velocities may be in any direction, a large percentage of these will have significant components of thermal velocity perpendicular to the axis of the ion beam.

Let E_L = energy of the ion in the direction of the beam axis in electron volts

E_T = energy of the ion perpendicular to the beam axis in electron volts

D_L = drift distance in cm (in this case 66)

D_T = radius of gate grids in cm (in this case 2)

Then, since $E = 1/2\ mv^2$:

$$\frac{E_T}{E_L} = \frac{\frac{1}{2}m(\frac{D_T}{t})^2}{\frac{1}{2}m(\frac{D_L}{t})^2} \quad \text{for ions which just miss the gate grids}$$

$$\frac{E_T}{E_L} = (\frac{D_T}{D_L})^2 .$$

Substituting the known values of D_T, D_L, and E_T:

$$E_L = \frac{(\frac{66}{2})^2}{1.5} = 725$$

The accelerating voltage must therefore be above approximately 725 volts for there to be negligible loss in transmission due to thermal velocities alone. With the design parameters under consideration this will be true for masses greater than 107. For lower masses there

will be a decreasing transmission as the voltage is reduced.

If high transmission is desired at lower masses, t'/τ may be chosen to be a lower value. This will increase the accelerating voltage needed for a given mass but decrease the percentage resolution. This can be tolerated in this region since adjacent masses are separated by a higher percentage of their mass.

Possibly a more satisfactory method of handling lower masses would be to keep the accelerating voltage constant and change the frequency, keeping the same t'/τ. Fortunately, in the instrument's immediate application, high transmission is needed only in the high mass region.

3. Non-parallel Accelerating Field.-- Irregularities in the accelerating field can give the ions components of energy perpendicular to the axis of the beam. These are particularly serious in the vicinity of the ion source where the ions have very low energy. Fringing fields around the edge of the filament and transverse fields due to a part of the filament not being perpendicular to the beam axis are the worst causes of transverse velocity.

Field grading rings connected by a potential divider are placed along the accelerating field to reduce non-parallel fields due to fringing at the edge of the accelerating plates. A rubber diaphragm model of the electrostatic field in the region near the filament was studied to find the proper location of the filament for a minimum of transverse energy.

The highest value obtained experimentally under these conditions for the loss in transmission due to transverse fields alone has been a 40 percent loss (or a transmission of 60 percent). Higher transmission

may be obtained with better source design.

A slight increase in transmission was obtained by using an electrostatic lens in the drift tube. This was abandoned because of the added complexity.

4. Efficiency of the Collection System.-- Various collecting systems, to be discussed later, have been used. The efficiency of these collectors varies from 100 percent to about 5 percent.

In this model the total transmission is about 30 percent multiplied by the efficiency of the collector. With extra attention being paid to the design of the source and by the use of 1/2 mil grid wires, a transmission of 75 percent could probably be obtained.

C. Harmonic Elimination

As was mentioned earlier (page 9) ions with a transit time of any integral multiple of the period of the oscillator can be collected. When t'/τ is chosen as 1/40, this multiple is 40. Ions with transit times of 39, 41, etc. cycles can also be collected. These "false" transit time ions will be called harmonics.

1. Rejected Harmonic Elimination Systems.-- Several means of eliminating harmonics have been devised - most of which have been rejected. Some of these will be discussed, since even the ones rejected may have special application or may become useful through improved techniques.

Several methods have been devised which eliminate harmonics by making the gate pulses correspond to each bunch of ions only for the proper transit time. Since the effective gate pulse width is 1/40 of the time between pulses harmonic bunches may correspond to gate

pulses one out of 40 times. The harmonics then will cause a D.C. background current which may vary more than the current of low abundance mass peaks. Since samples with mass peaks of low abundance are quite often analyzed, this is a serious difficulty and consequently these methods were rejected.

These methods will be mentioned briefly:

(a) Frequency modulate the oscillator over a frequency range of 2:1 with a modulation period equal to the transit time of the ions to be analyzed. Saw-tooth and pulse wave patterns for successive transit time periods must be the same, but adjacent periods of the wave patterns must be unequal and should preferably have a linearly varying period during the frequency modulation cycle.

(b) Frequency modulate the oscillator at a low frequency rate. Delay the pulse used in producing the saw-tooth voltage by the transit time and apply the delayed pulse to the gate grids.

(c) Bunch the ions by applying the sum of two saw-tooth voltages of equal amplitude, one with a period equal to the desired transit time and the other with a period 1/40 of this value. Apply pulses to the gate grids of a frequency of 41/40 that of high frequency saw-tooth voltage. Form the low frequency saw-tooth voltage from the coincidence of the gate pulses and pulses used for the high frequency saw-tooth.

Another group of systems was devised which in principle preserved the high transmission and eliminated harmonics, but these were rejected because of their difficulty of construction, necessity of high magnetic fields, and reduction in transmission due to fringing fields.

Two of these are mentioned briefly as follows:

(a) Use a low resolution magnetic mass spectrograph in cascade with the time-of-flight instrument.

(b) Use crossed electrostatic and magnetic fields as a velocity selector that will leave undeflected only ions of a velocity corresponding to the desired transit time.

Another type of velocity selector was devised which used two pairs of gate grids in cascade. This system was rejected because the first gate grids would change the velocity by an amount which is difficult to hold constant for all ions.

Another velocity selector which is ideal in theory but difficult in practice at high masses uses an axial magnetic field. A solenoid around the drift tube provides a magnetic field in the direction of the axis of the beam. It is well known that the angular velocity of an ion depends on e/m and H and not on the energy of the ion. If the beam is then injected into the drift tube at a slightly skew angle with the axis, as shown in Fig. 2, the ions will travel in a helix with only the desired ions traversing 360° of the helix in transit. If the magnetic field remains proportional to the accelerating voltage, the desired ions can be made to always traverse 360°. This system has the further advantage that it provides 360° magnetic focusing of the ion beam at the collector. The radius of curvature of the helix and the angular dispersion will remain constant for all masses. The disadvantage is that at mass 250 the magnetic flux required is about 8000 gauss. The power required for a reasonable size solenoid would be about 15 kilowatts. This leads to almost impossible cooling problems. Since the power

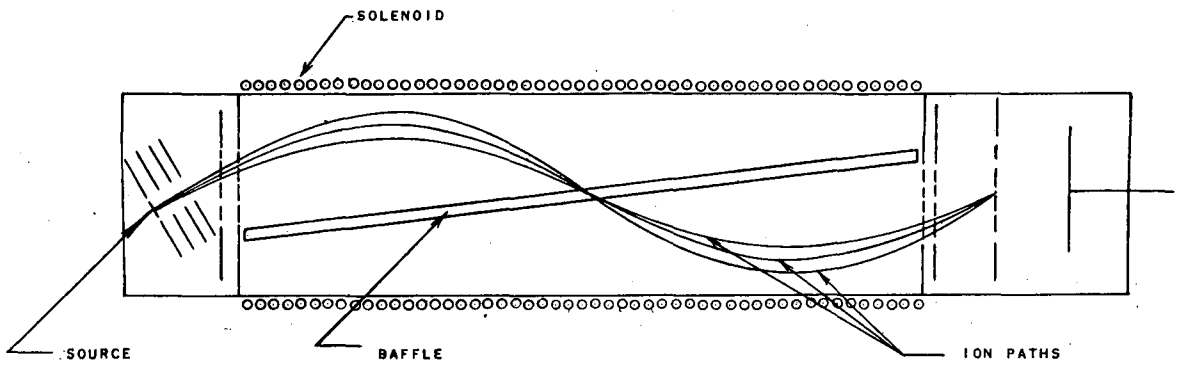

MU 3147

Fig. 2

required goes down as the square of the mass, the power dissipation will be within reason at low masses and may make this system feasible in this region.

2. A Successful Harmonic Elimination System.-- A successful harmonic eliminator has been built which, however, reduces the transmission of the instrument. The instrument can be used with the harmonic eliminator and by a flip of a switch can be reverted to its normal high transmission operation. For isotope separation, where high transmission is required, harmonics seldom cause trouble since isotope separation usually involves a small section of the mass scale. For detection of the presence of an isotope with an electrometer, harmonics cause serious interference. However, if the detector is sensitive enough, lowered transmission is of little disadvantage.

If only one bunch of ions is injected into the drift tube each transit time and there is only one gate pulse per transit time, there will be no harmonics. Since it is difficult to gate the ion beam without changing its energy, all bunches other than the desired bunch must be eliminated in another way. At first deflector plates were considered for deflecting the unwanted bunches into the walls of the drift tube. Elementary calculations, however, showed that any reasonable size deflection plate would change the energy of the beam because of transit time effects in the fringing field of the plates. A successful method for eliminating these bunches uses a square pulse added to the linearly rising bunching voltage as shown in Fig. 3. This pulse will subsequently be called the "blanking pulse."

A D.C. voltage equal to the height of the square pulse is also added to the repeller grid (R in Fig. 1) voltage. Only ions bunched

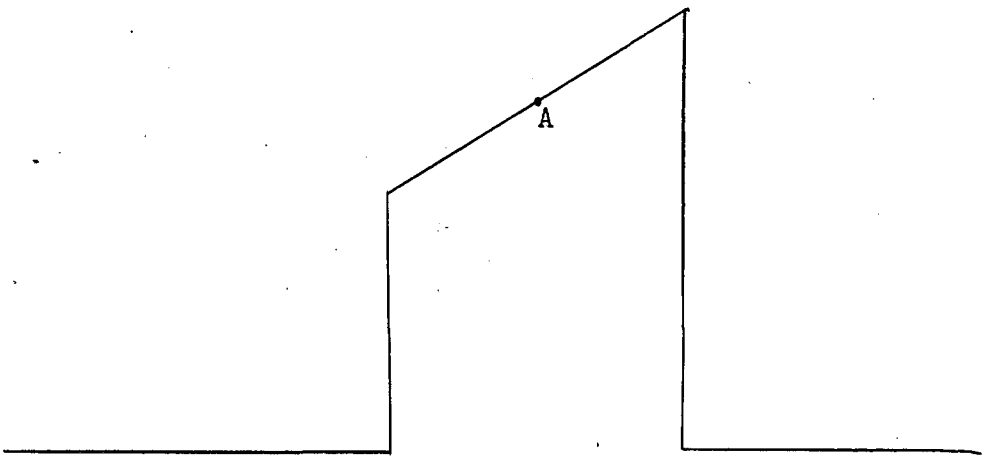

Fig. 3. Wave form of the blanking pulse.

during the pulse have enough energy to overcome this repelling voltage. Since there is only one gate pulse per transit time, the only ions that are collected are those of the proper transit time that were bunched during the blanking pulse. For convenience in measurement, the D.C. voltage of the bunching grid is regulated such that point A (Fig. 3) of the blanking pulse is at zero voltage. This has the additional advantage that the voltage is low across the bunching grids during the bunching of the ions that will be selected. This reduces transverse velocities due to fringing fields around the grid wires.

A variation of the above system might use a constant accelerating voltage and vary the mass selected by varying the time between the square pulse applied to the buncher grid and the gate pulse. The slope of the bunching voltage in this case would have to increase linearly with the mass. The time between the square pulse and gate pulse (transit time) should decrease proportional to the square root of the mass.

III. CONSTRUCTION OF THE INSTRUMENT

A. Pulse Generator Circuit

The circuit used to generate the gate pulse is shown in Fig. 4. This pulse generator is also used to drive the saw-tooth voltage generator.

The circuit is driven by a crystal-controlled Pierce oscillator (T_1), using an AT cut crystal. This cut of crystal was chosen because of its low temperature coefficient at room temperature. The circuit usually operates at 2.2 megacycles per second. However, a crystal of 1.5 megacycles has been used in special applications.

The oscillator is followed by a series of transformer-coupled amplifiers (T_2, T_3, T_4, T_5, and T_6) operating in class C. The amplifiers clip off and amplify a successively smaller fraction of the crest of the sine wave generated by the crystal. The output of the fifth stage (T_6) is a pulse of about 1/50 microsecond width and 300 volt amplitude. One of the windings of the transformer in this stage drives the saw-tooth generator and the other drives the power output tubes that supply the gate pulse. The transformers used in these amplifiers consist of a few turns of heavy wire on a permalloy core with 0.001 inch thick laminations. The power output stage consists of two 6AS7's (T_7) connected in parallel with a 50Ω plate load. The gate pulse is a negative pulse of less than 1/50 microsecond duration and an amplitude of about 400 volts. Fifty ohm coaxial cable is used between the power amplifiers and the gate grids. A photograph of the gate pulse wave form is shown in Fig. 5.

When it is desired to run the machine with the harmonic eliminator, a frequency divider with a ratio of 40 is inserted between the fifth

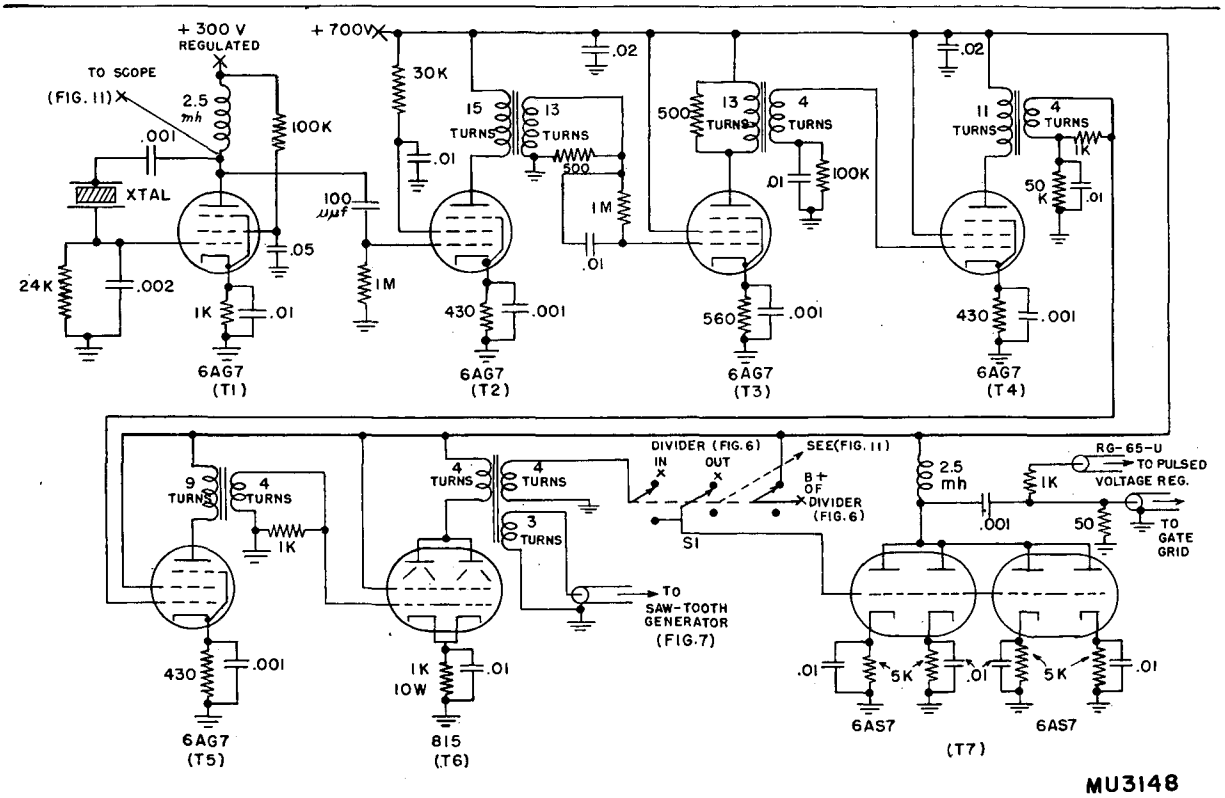
+ 300 V REGULATED
+ 700V
TO SCOPE (FIG. 11)
2.5 mh
100K
.001
XTAL
100 μμf
.05
24K
.002
1K
.01
1M
6AG7 (T1)
30K
.01
15 TURNS
13 TURNS
500
1M
.01
430
.001
6AG7 (T2)
.02
500
13 TURNS
4 TURNS
.01
100K
560
.001
6AG7 (T3)
.02
11 TURNS
4 TURNS
1K
50 K
.01
430
.001
6AG7 (T4)
9 TURNS
4 TURNS
1K
430
.001
6AG7 (T5)
4 TURNS
4 TURNS
3 TURNS
1K 10W
.01
815 (T6)
TO SAW-TOOTH GENERATOR (FIG.7)
DIVIDER (FIG. 6) IN
OUT
SEE(FIG. 11)
B+ OF DIVIDER (FIG. 6)
S1
2.5 mh
.001
1K
RG-65-U TO PULSED VOLTAGE REG.
50
TO GATE GRID
.01
5K
.01
5K
.01
6AS7
6AS7
(T7)
MU3148

Fig. 4

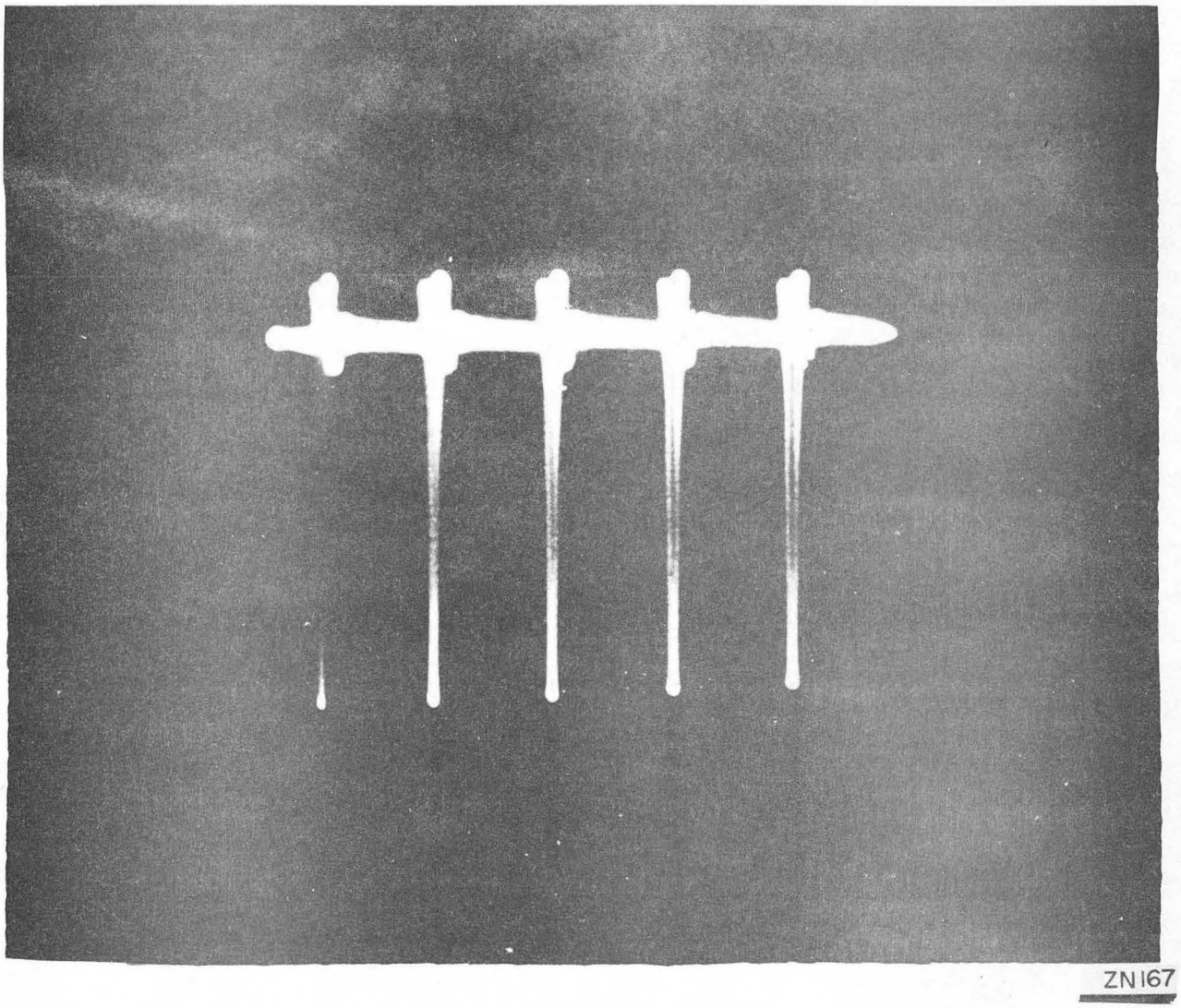

Fig. 5

amplifier (T_6) and the power output tubes by means of switch S_1 in Fig. 4. This circuit, shown in Fig. 6, consists of three stages in cascade (T_1, T_2, and T_3) followed by a power output stage (T_4). Each stage consists of a free running blocking oscillator, again using permalloy cores, synchronized by the previous output pulse. The dividers have ratios of 5, 4, and 2, respectively. A pulse is taken from one of the windings of the output transformer (I) of the frequency divider circuit to drive the blanking pulse generator. Another winding drives the power output tubes of the gate pulse generator. It is interesting to note that the pulse amplitude needed to drive the gate pulse power stages (T_7 in Fig. 4) is much less with the frequency divider than without. This is because the cathodes of the 6AS7's are capable of much higher pulse currents with the shorter duty cycle.

B. Saw-Tooth Generator

The circuit for the saw-tooth voltage generator is shown in Fig. 7. The pulse from the pulse generator circuit is amplified by a power tube (T_1) which drives the grids of two 815's in parallel (T_2). The plate current of (T_2) is maintained proportional to the accelerating voltage by varying the plate and screen voltage. To prevent the accelerating voltage from having to supply the plate current of these tubes, a cathode follower (T_3) with its grid controlled by the accelerating voltage supplies the current. An external vernier control is provided to regulate this current.

The plate load of the output tubes of the saw-tooth generator (T_2) consists of the stray capacitance of the circuit, which amounts to about 500 mmf. The plate current of T_2 is supplied through a high inductance.

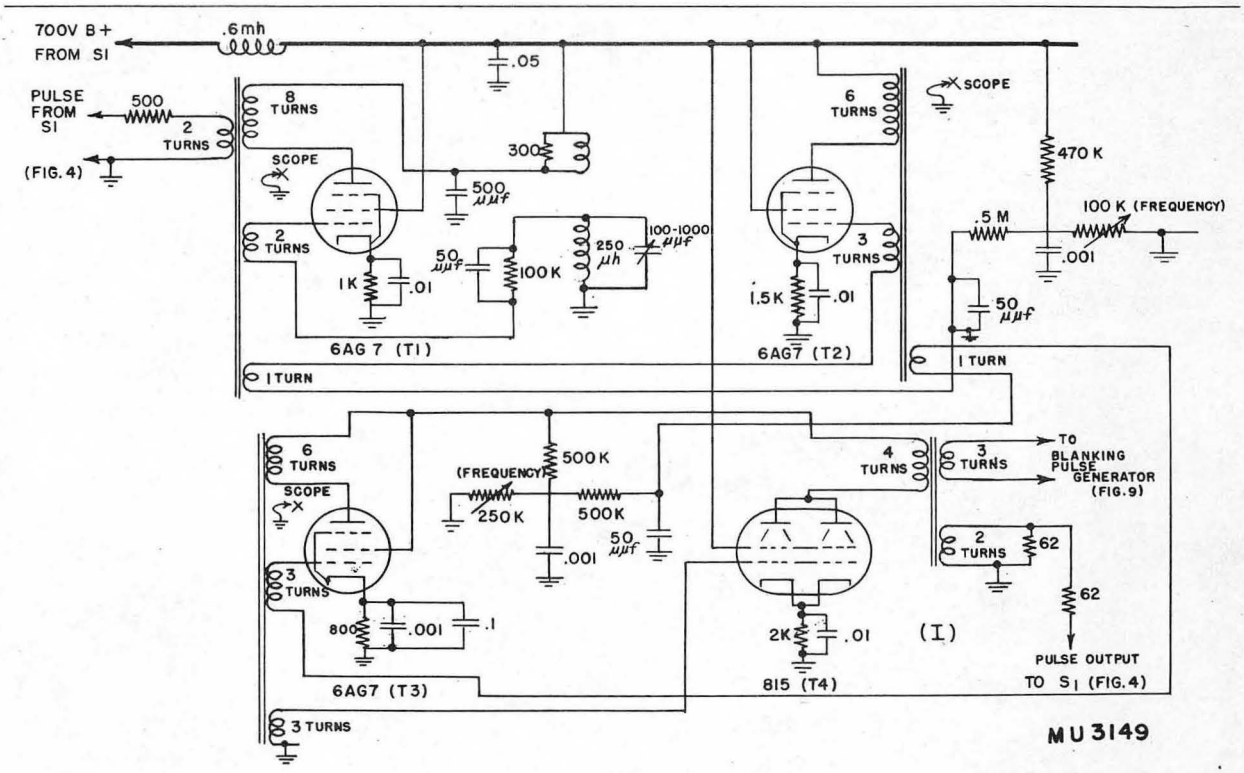
700V B+
FROM SI
.6mh
.05
PULSE
FROM
SI
500
2
TURNS
(FIG. 4)
8
TURNS
SCOPE
300
500
μμf
2
TURNS
1K
.01
50
μμf
100K
250
μh
100-1000
μμf
6AG 7 (T1)
1 TURN
6
TURNS
SCOPE
470 K
.5 M
100 K (FREQUENCY)
.001
3
TURNS
1.5K
.01
50
μμf
6AG7 (T2)
1 TURN
6
TURNS
SCOPE
(FREQUENCY)
500K
250K
500K
.001
50
μμf
3
TURNS
800
.001
.1
6AG7 (T3)
3 TURNS
4
TURNS
3
TURNS
TO
BLANKING
PULSE
GENERATOR
(FIG. 9)
2
TURNS
62
62
2K
.01
(I)
815 (T4)
PULSE OUTPUT
TO S1 (FIG. 4)
MU 3149

Fig. 6

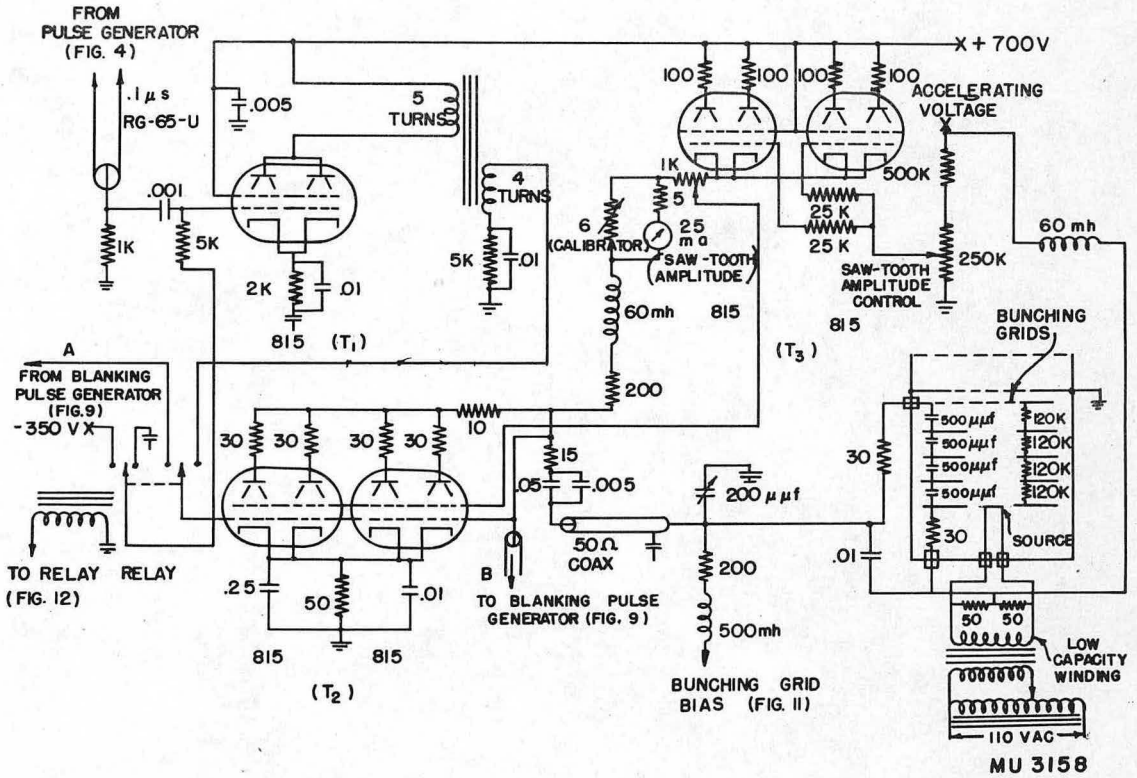
FROM PULSE GENERATOR (FIG. 4)
.1 μs
RG-65-U
.005
5 TURNS
4 TURNS
.001
1K
5K
2K
.01
815 (T1)
5K
.01
X + 700V
100
100
100
100
ACCELERATING VOLTAGE
1K
5
500K
6 (CALIBRATOR)
25 ma
SAW-TOOTH AMPLITUDE
25 K
25 K
SAW-TOOTH AMPLITUDE CONTROL
250K
60 mh
60mh
815
815
(T3)
BUNCHING GRIDS
A
FROM BLANKING PULSE GENERATOR (FIG.9)
-350 V
200
10
30 30 30 30
15
.05
.005
200 μμf
30
500 μμf
500 μμf
500 μμf
500 μμf
120K
120K
120K
120K
30
SOURCE
.01
50Ω COAX
B
TO BLANKING PULSE GENERATOR (FIG. 9)
TO RELAY
RELAY
(FIG. 12)
.25
50
.01
815
815
(T2)
200
500mh
BUNCHING GRID BIAS (FIG. 11)
50 50
LOW CAPACITY WINDING
110 VAC
MU 3158

Fig. 7

When a pulse is applied to the grid of the saw-tooth generator tubes (T_2) the plate current discharges the circuit capacitance. Since an inductance tends to be a constant current device if it is large enough, the capacitance will then be charged up linearly by the inductance in the plate circuit. The slope of the saw-tooth voltage will be proportional to the plate current of the output tubes, if the tubes are cut off between pulses. A meter is placed in the plate circuit to measure this current since the slope of the saw-tooth voltage must remain proportional to the mass analyzed. The plate current meter is calibrated in mass units for ease in adjustment of this saw-tooth bunching voltage. A photograph of the saw-tooth bunching voltage wave form is shown in Fig. 8.

Since it is desired to accelerate the ions by a D.C. field up to the first bunching grid, the saw-tooth voltage must be applied to all of the field rings, source, and first bunching grid. The saw-tooth bunching voltage field will appear only across the gap between the bunching grids.

Low value resistors are placed in series with many of the elements in the bunching grid circuit to suppress resonant oscillations which occur from wiring inductance and capacitance.

C. Blanking Pulse Generator

The circuit for the blanking pulse generator is shown in Fig. 9. As was stated earlier, for harmonic elimination the bunching voltage must consist of a square pulse added to a linearly rising voltage with a width of 1/40 the transit time.

In this circuit the pulse input is first amplified by a pair of 6AU5's (T_1) connected in parallel. The pulse output of these tubes is

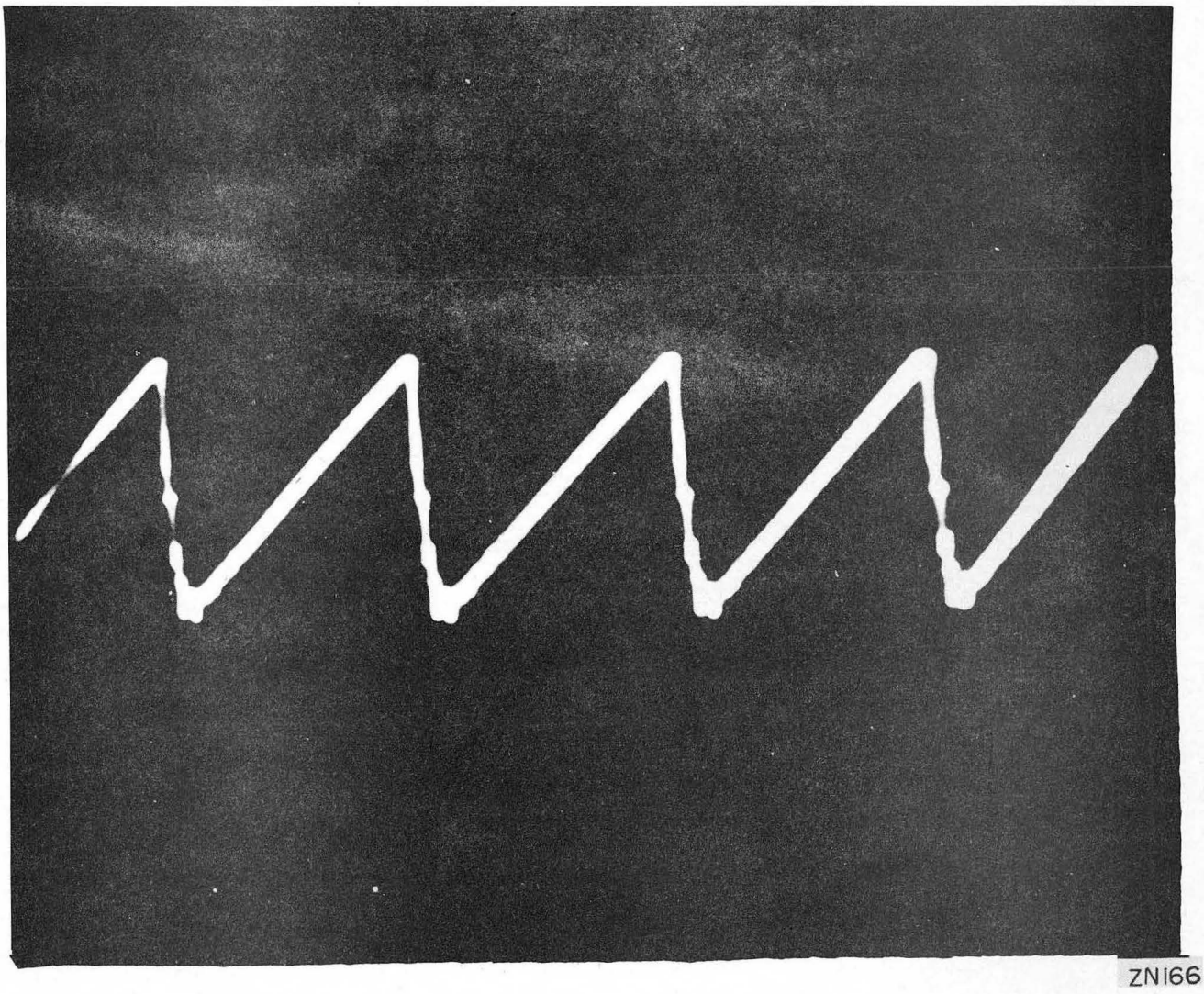

Fig. 8

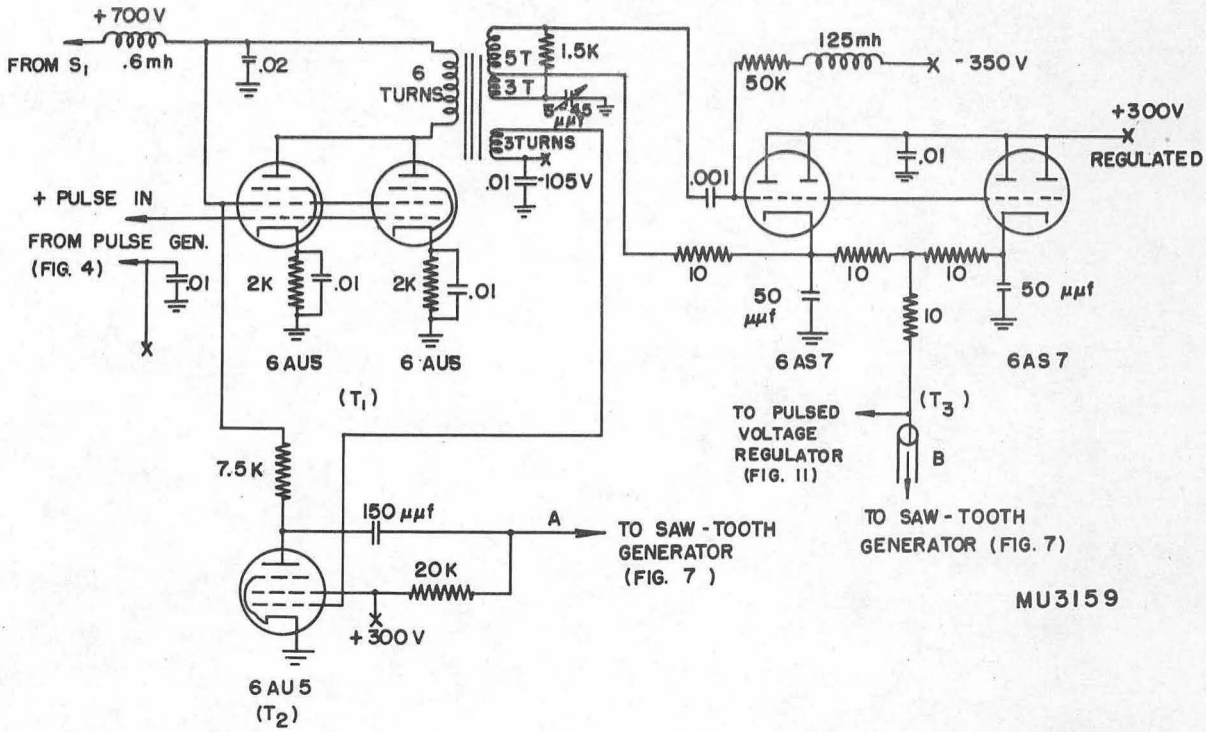
+700 V
FROM S1
.6mh
.02
6 TURNS
5T
3T
1.5K
5 μμf
3TURNS
.01
105V
125mh
50K
-350 V
+300V
REGULATED
.001
.01
+ PULSE IN
FROM PULSE GEN.
(FIG. 4)
.01
2K
.01
2K
.01
10
10
10
50 μμf
50 μμf
10
6AU5
6AU5
(T1)
6AS7
6AS7
(T3)
TO PULSED VOLTAGE REGULATOR (FIG. 11)
B
7.5K
150 μμf
A
TO SAW-TOOTH GENERATOR (FIG. 7)
20K
+300V
TO SAW-TOOTH GENERATOR (FIG. 7)
6AU5
(T2)
MU3159

Fig. 9

applied to a pair of 6AS7's (T_3) in parallel and to a 6AU5 (T_2). The load for the blanking pulse is essentially capacitive. The two 6AS7's (T_3) charge up the load capacitance at the same time the plate of the 6AU5 (T_2) drops in voltage and cuts off the pair of 815's (T_2) in Fig. 7 that have been conducting up to this time. The bunching voltage will now rise linearly because of the current flowing in the inductance in the plates of the 815's (T_2) in Fig. 7. When the voltage on the grids of these 815's has decayed up above cut-off they will again conduct and discharge the load capacitance. This returns the circuit to its normal condition.

Low value resistors are used in the wiring between tubes to damp out resonances. A photograph of the blanking pulse wave form is shown in Fig. 10.

D. Pulsed Voltage Regulator

When the harmonic eliminator is used it is necessary to add the height of the middle of the blanking pulse to the D.C. source voltage in order to obtain the effective accelerating voltage for the bunch to be analyzed. As mentioned on page 27, the bunching grid is held at a negative D.C. voltage such that the middle of the blanking pulse (point A in Fig. 3) is at zero voltage with respect to ground. The accelerating voltage used to calculate the mass analyzed is then the difference between the D.C. bunching grid voltage and the voltage applied to the source.

A pulsed voltage regulator is used to hold the middle of the blanking pulse at zero voltage. The circuit for this is shown in Fig. 11. In this circuit a voltage regulator is used which is active only at the

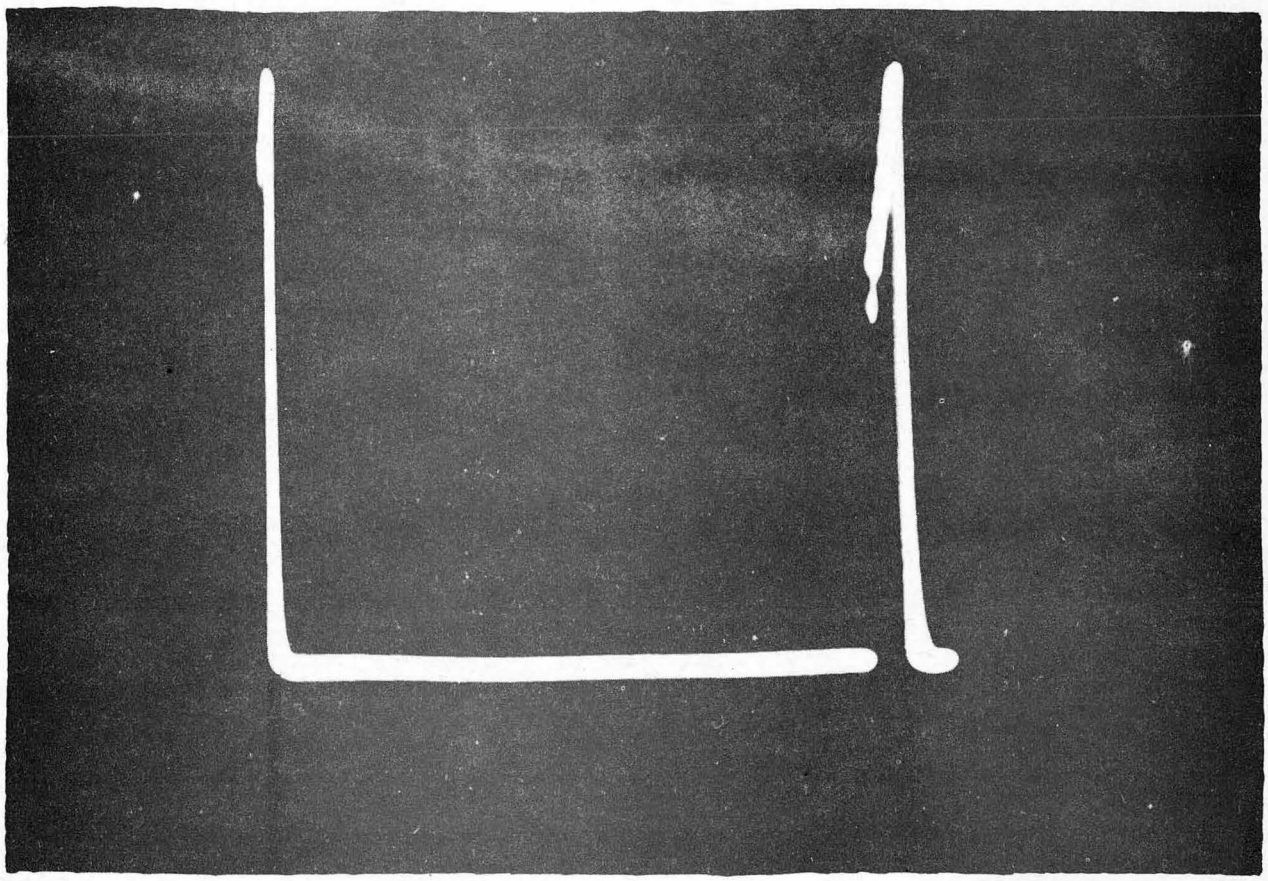

ZN165

Fig. 10

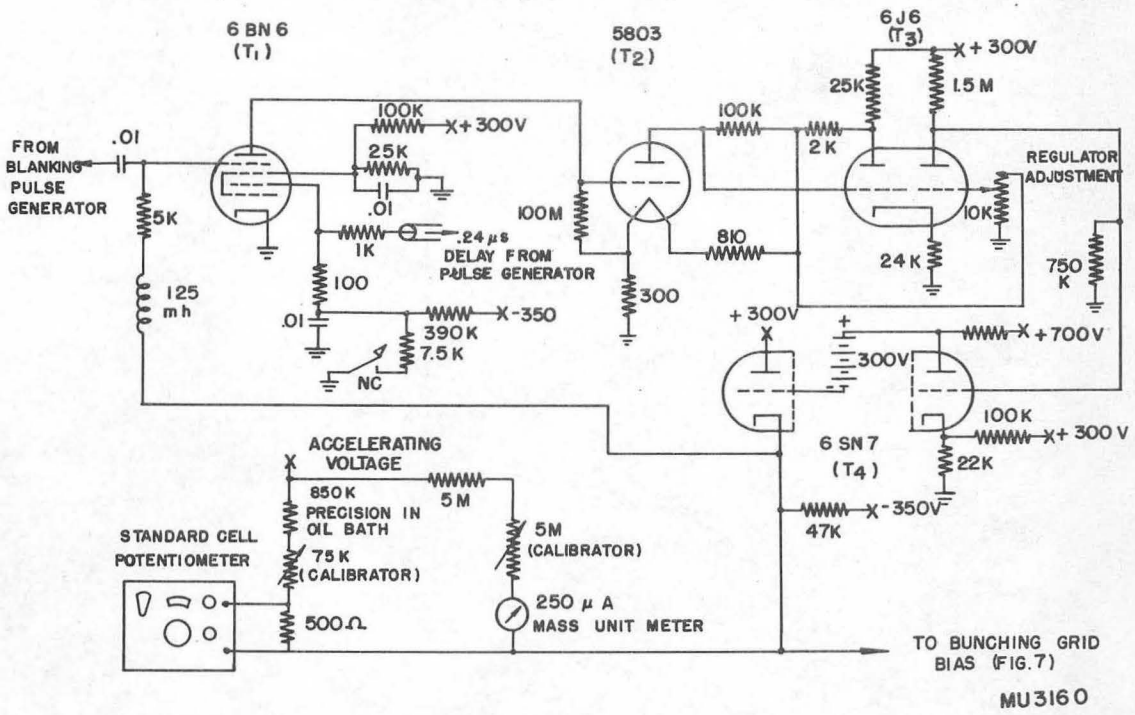
6 BN 6
(T1)
5803
(T2)
6J6
(T3)
+300V
25K
1.5 M
100K
+300V
100K
2K
FROM
BLANKING
PULSE
GENERATOR
.01
25K
.01
REGULATOR
ADJUSTMENT
5K
100M
10K
1K
.24 μs
DELAY FROM
PULSE GENERATOR
810
24K
750
K
125
mh
100
300
.01
-350
390K
7.5K
NC
+300V
+700V
300V
100K
+300 V
6 SN 7
(T4)
22K
ACCELERATING
VOLTAGE
850K
PRECISION IN
OIL BATH
5M
-350V
47K
STANDARD CELL
POTENTIOMETER
75K
(CALIBRATOR)
5M
(CALIBRATOR)
250 μ A
MASS UNIT METER
500Ω
TO BUNCHING GRID
BIAS (FIG.7)
MU3160

Fig. 11

desired point on the wave form. A 6BN6 (T_1) is used as the gated control tube. A signal from the output of the gate pulse generator is delayed 0.24 microseconds by a length of RG-65-U delay cable and is applied to the first control grid of the 6BN6. The blanking pulse voltage is applied to the second control grid. The plate of the 6BN6 (T_1) is connected to a high gain direct coupled amplifier (T_2, T_3, and T_4) which controls the D.C. level of the blanking pulse voltage. Since this bias affects the output of the 6BN6 (T_1), this circuit constitutes a negative feedback loop which regulates the desired point on the blanking pulse wave form at zero voltage.

E. Repeller Grid Voltage

The circuit diagram of the repeller grid voltage supply is given in Fig. 12. Since the effective accelerating voltage with the blanking pulse applied is higher than the source voltage by the height of the middle of the blanking pulse, the repeller grid voltage must be increased by this value when the harmonic eliminator is turned on. This increase in voltage is supplied by a battery (B_1) which is switched in by a relay operated by S_1 in Fig. 4. The repeller grid will then be raised in voltage the proper amount when the harmonic eliminator is turned on.

The repeller grid must be held at a voltage above the effective accelerating voltage but below the energy of the ions which have been accelerated by the gate pulse. The additional voltage which is added to the effective accelerating voltage is obtained from the battery (B_2).

F. Accelerating Voltage Measurement

The effective accelerating voltage is measured between the bunching grid and source. A 3-in. meter is used for coarse measurement and a

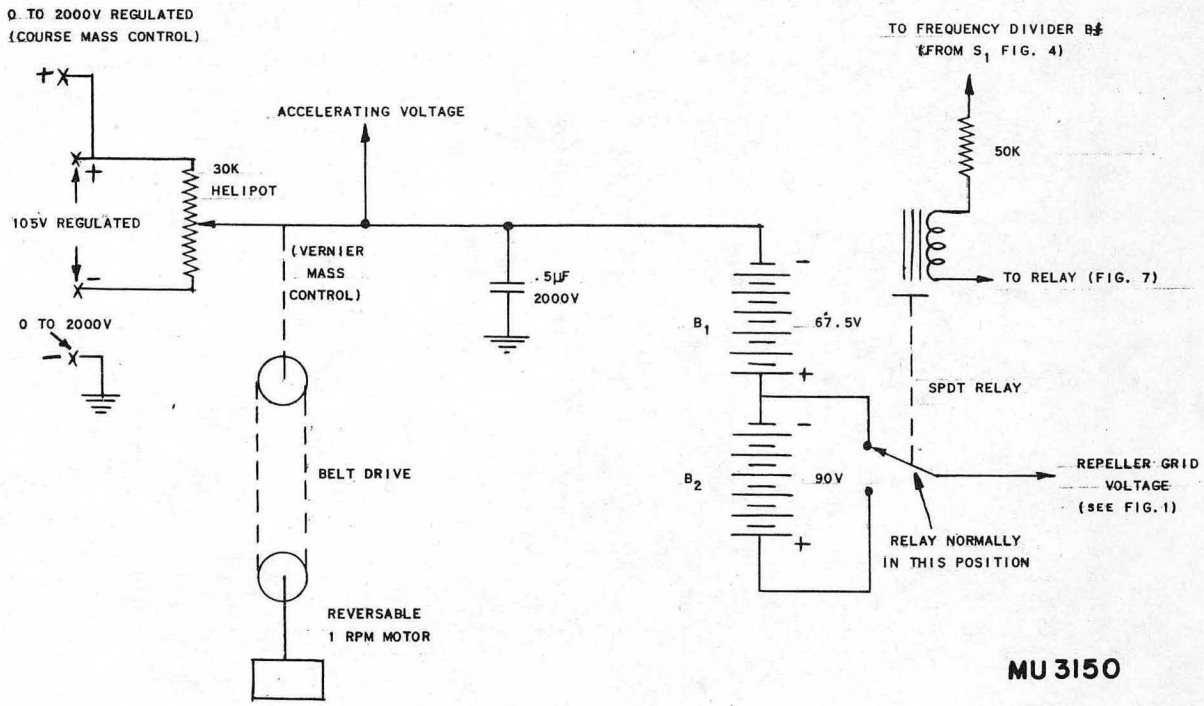
0 TO 2000V REGULATED
(COURSE MASS CONTROL)
+
105V REGULATED
-
0 TO 2000V
30K
HELIPOT
ACCELERATING VOLTAGE
(VERNIER
MASS
CONTROL)
.5μF
2000V
BELT DRIVE
REVERSABLE
1 RPM MOTOR
TO FREQUENCY DIVIDER B
(FROM S1 FIG. 4)
50K
TO RELAY (FIG. 7)
B1
67.5V
SPDT RELAY
B2
90V
REPELLER GRID
VOLTAGE
(SEE FIG. 1)
RELAY NORMALLY
IN THIS POSITION
MU 3150

Fig. 12

potentiometer and standard cell are used for accurate measurement. The potentiometer is capable of an accuracy in voltage measurement which corresponds to about 1/10 of a mass unit. Since the potentiometer measures a maximum voltage of only 1.1 volts, a stable potential divider must be used. This is composed of precision resistors in an oil bath. The oil bath is necessary to reduce variations in temperature due to the power dissipated in the resistors. These measuring devices are shown in Fig. 11. The complete block circuit diagram of the mass spectrograph with all interconnections between circuits is shown in Fig. 13. A photograph of the assembled circuits is shown in Fig. 14.

G. Ion Source

In the present model of the mass spectrograph a thermal ion source is used. The material to be analyzed is dissolved in a solution, dropped on a tungsten filament and allowed to dry. Ions are obtained by heating the filament to the temperature necessary for thermal ionization of the material to be analyzed. This type of source is often quite inefficient in the production of ions and the ion current cannot be held constant easily over a long period of time. This source was chosen because the ions produced have a low kinetic energy, there is little multiple ionization, sample preparation is simple, and it is easier to keep the accelerating field parallel in the region of the source.

A cross section of the source and accelerating system is shown in Fig. 15. A photograph of this system is shown in Fig. 16. The field rings are used to keep the accelerating field lines parallel.

An electron bombardment source could be used with the instrument with the sample introduced as a gas. This type of source produces ions

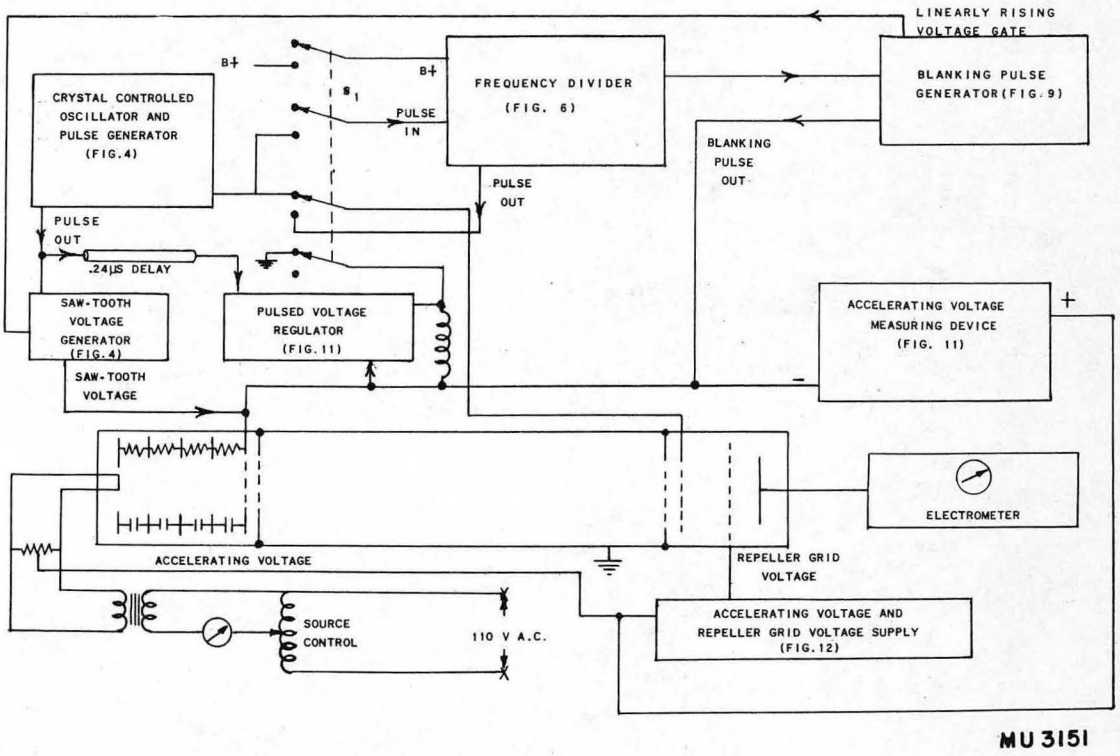
LINEARLY RISING VOLTAGE GATE
B+
B+
S_1
CRYSTAL CONTROLLED OSCILLATOR AND PULSE GENERATOR (FIG.4)
PULSE IN
FREQUENCY DIVIDER (FIG. 6)
BLANKING PULSE GENERATOR(FIG.9)
BLANKING PULSE OUT
PULSE OUT
PULSE OUT
.24μS DELAY
SAW-TOOTH VOLTAGE GENERATOR (FIG.4)
PULSED VOLTAGE REGULATOR (FIG.11)
ACCELERATING VOLTAGE MEASURING DEVICE (FIG. 11)
+
−
SAW-TOOTH VOLTAGE
ELECTROMETER
ACCELERATING VOLTAGE
REPELLER GRID VOLTAGE
SOURCE CONTROL
110 V A.C.
ACCELERATING VOLTAGE AND REPELLER GRID VOLTAGE SUPPLY (FIG.12)
MU 3151

Fig. 13

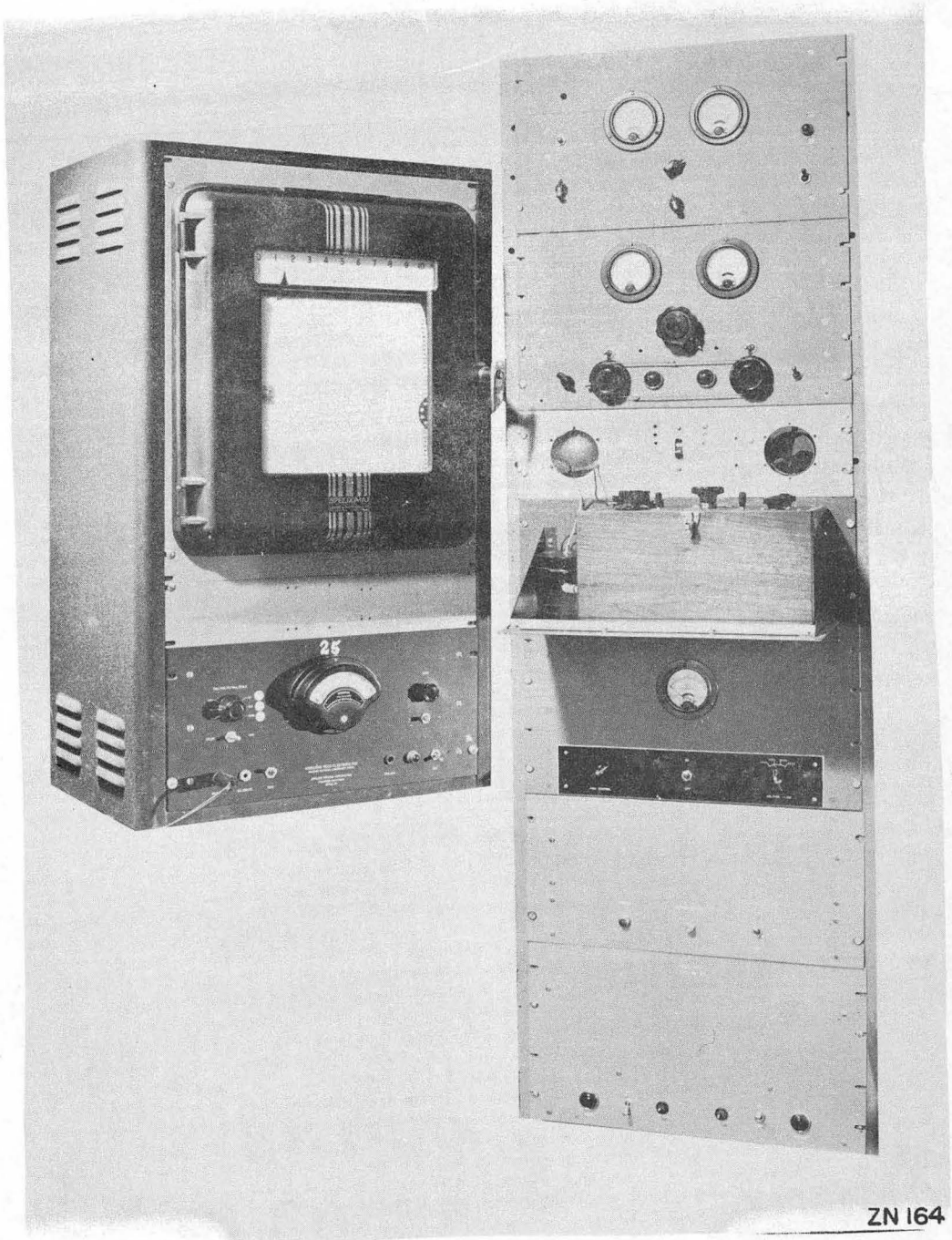

Fig. ~~10~~ 14

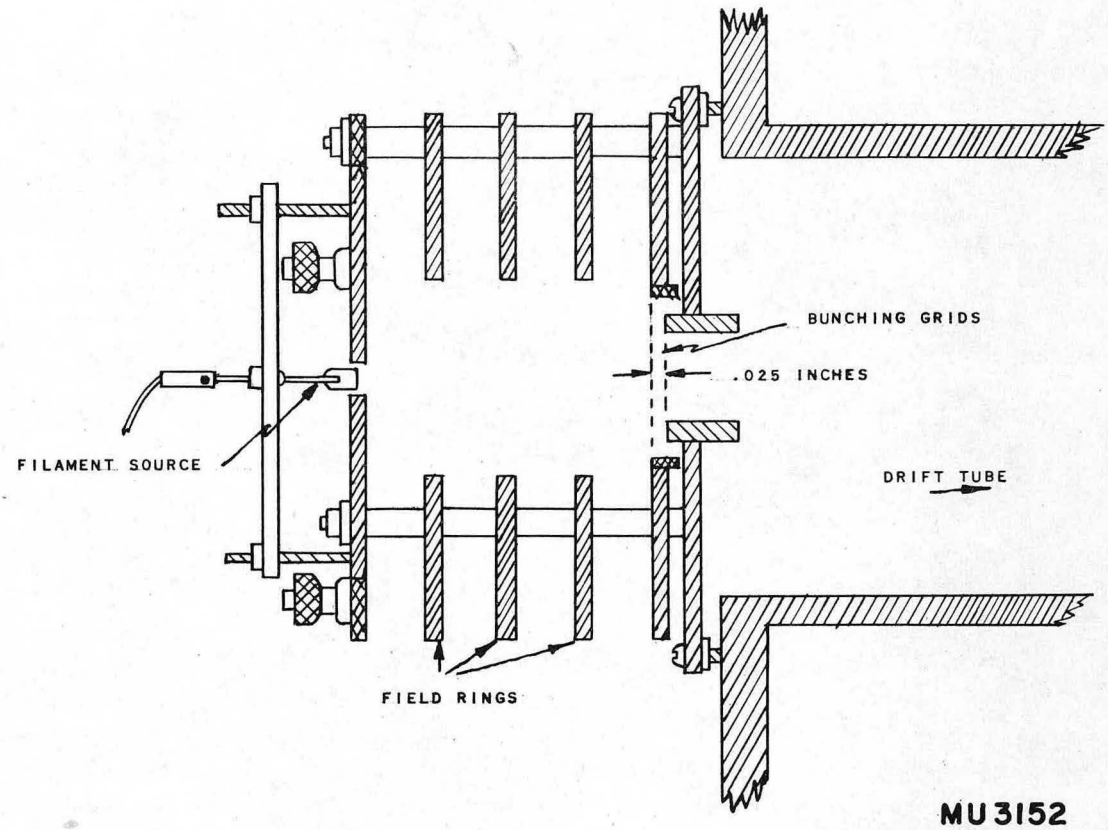
BUNCHING GRIDS
.025 INCHES
FILAMENT SOURCE
DRIFT TUBE
FIELD RINGS
MU3152

Fig. 15

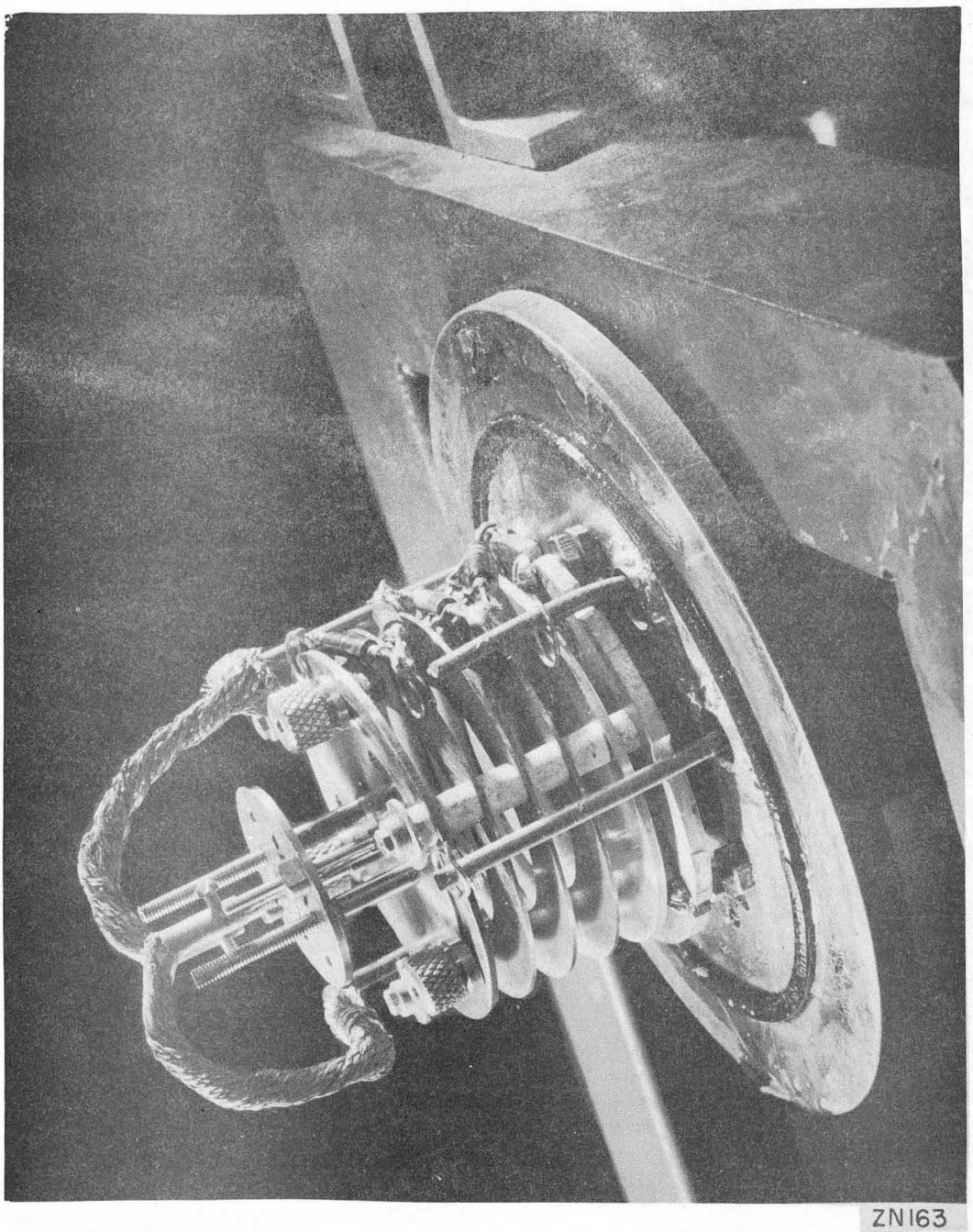

Fig. 16

with a low kinetic energy, few multiply-ionized ions, and has an accurately controlled ion beam. However, the efficiency of ionization is low, and it is difficult to keep the accelerating field sufficiently parallel in the region of the source.

If high ionization efficiency is desired, several types of sources could be used, such as an arc source or pig source. These, however, produce ions with high kinetic energy, and consequently higher accelerating voltages and higher frequencies would have to be used in the mass spectrograph.

H. Grid Construction

This design of mass spectrograph places rather stringent requirements on the grids used as bunching and gate grids. They must be as transparent as possible. It would be desirable to have grids that were about 90 percent transparent. The grids must also have relatively flat potential planes within 5 mils of the grid. These conditions can be adequately satisfied by a grid composed of 1 mil wires spaced 8 mils apart. The geometry of the system requires that the gate grids be about 1 3/4 inches in diameter.

Since no grids were available commercially with the desired characteristics, a method of construction of these grids was devised by machinist Earl Hostetter and the author. A diagram of the construction system before the grids are pressed is shown in Fig. 17.

A tool steel paddle is machined and threads are cut in the edges with a pitch equal to the grid spacing. The paddle is then hardened and the two faces are ground and polished. It is then inserted in the lathe, and 1 mil tungsten wire is wound under slight tension around the

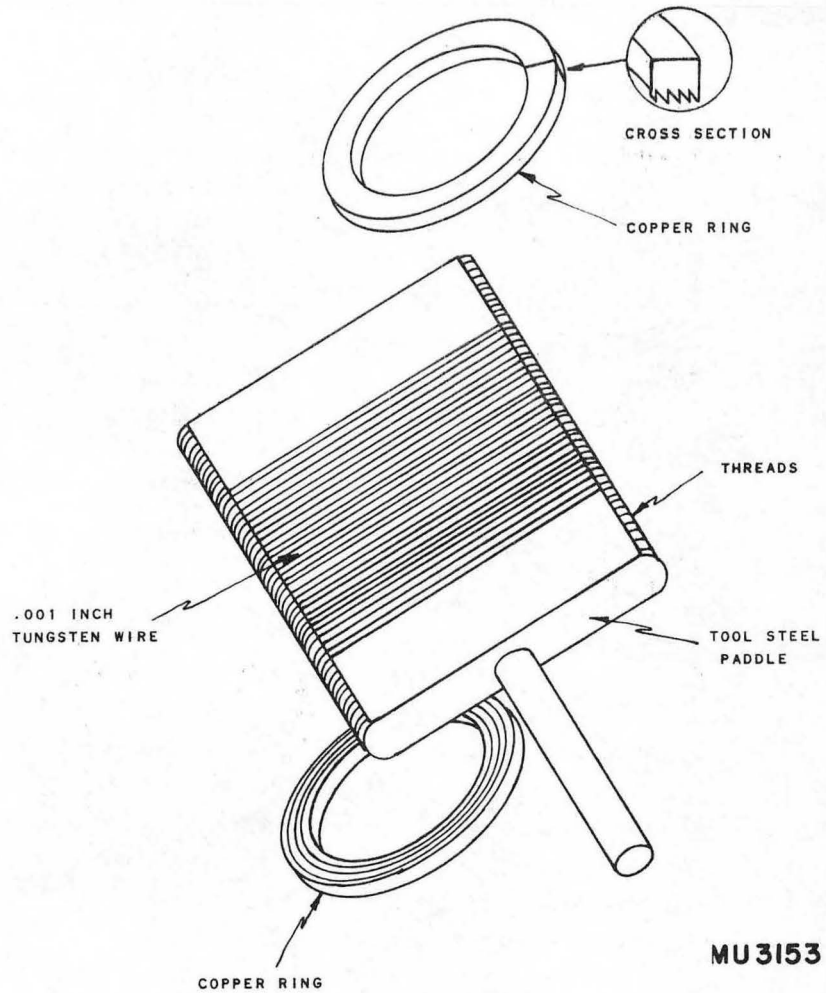
CROSS SECTION
COPPER RING
THREADS
.001 INCH
TUNGSTEN WIRE
TOOL STEEL
PADDLE
COPPER RING
MU3153

Fig. 17

paddle in the threads. The lathe tool holder is used as guide for the wire. The feed is set for the same pitch as the thread machined on the edges of the paddle. Two copper rings are then prepared with a scroll cut in their faces as shown in the section view (Fig. 17). The rings are usually mounted on flanges before turning. The rings are then pressed onto the two faces of the paddle with a pressure of about 10 tons per square inch of ring surface. The copper flows around the tungsten wire and makes a firm mechanical bond. During the pressing the ridges turned on the surface of the ring (see section view) fold out from the center and pull the wires tight. The wires are cut from the paddle after pressing, and a small file is used to trim them around the outer edge of the ring. Once a paddle has been constructed grids can easily be made in large numbers. A photograph of a finished grid is shown in Fig. 18.

I. Collection Assembly

1. Electron Multiplier Collection System.-- A cross section of the electron multiplier collection system is shown in Fig. 19. This consists of a pair of gate grids (G_1 and G_2), a repeller grid G_3 followed by an electron multiplier as detector. If isotope separation is desired a collector plate is placed over the face of the cathode of the electron multiplier.

The original construction did not use a repeller grid. The D.C. repelling voltage was applied to the second gate grid (G_2) along with the gate pulse. This system had four major disadvantages compared with the present system:

(a) The field strength was so high between the grids that electrical breakdown would often occur and burn out the grids.

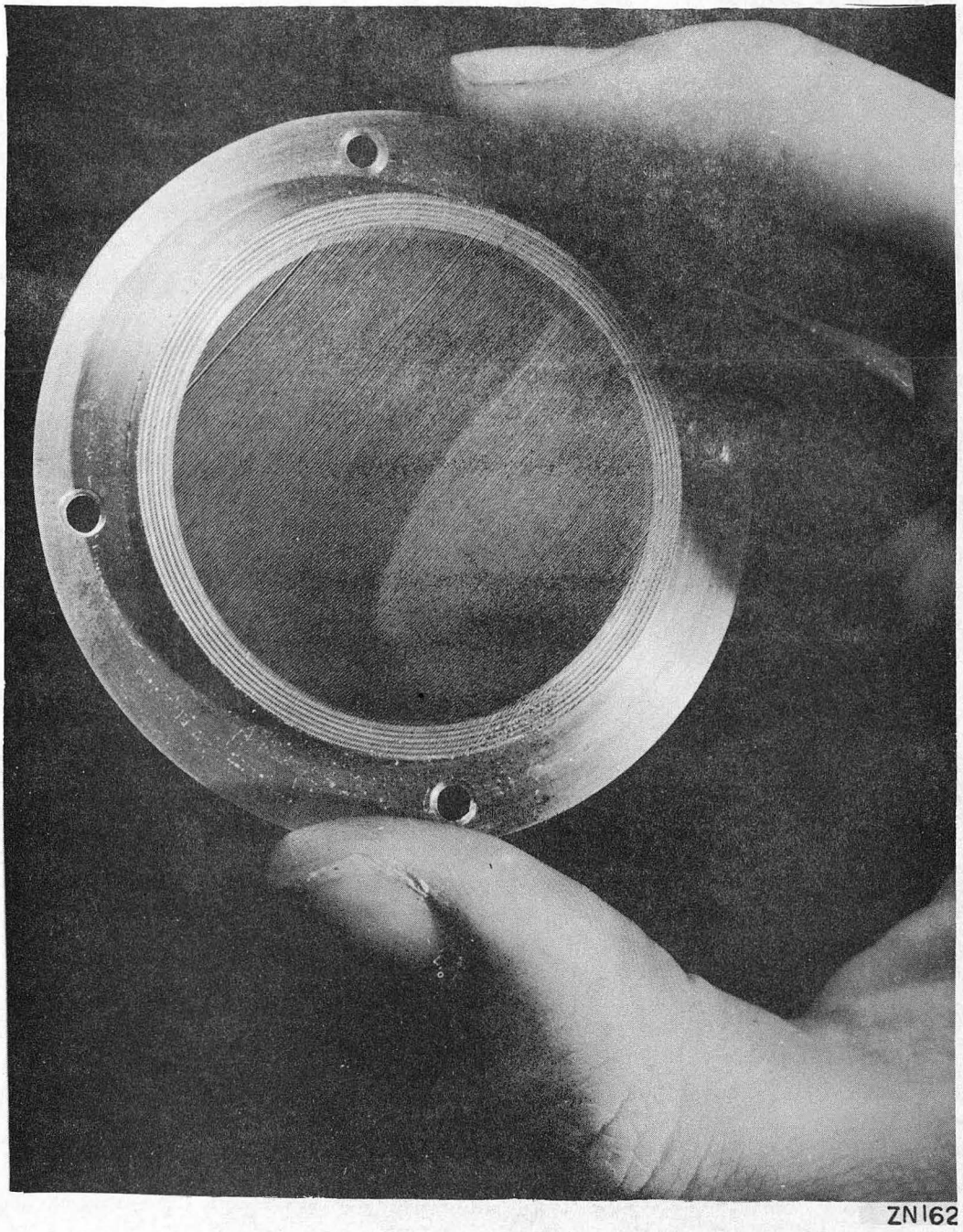

Fig. 18

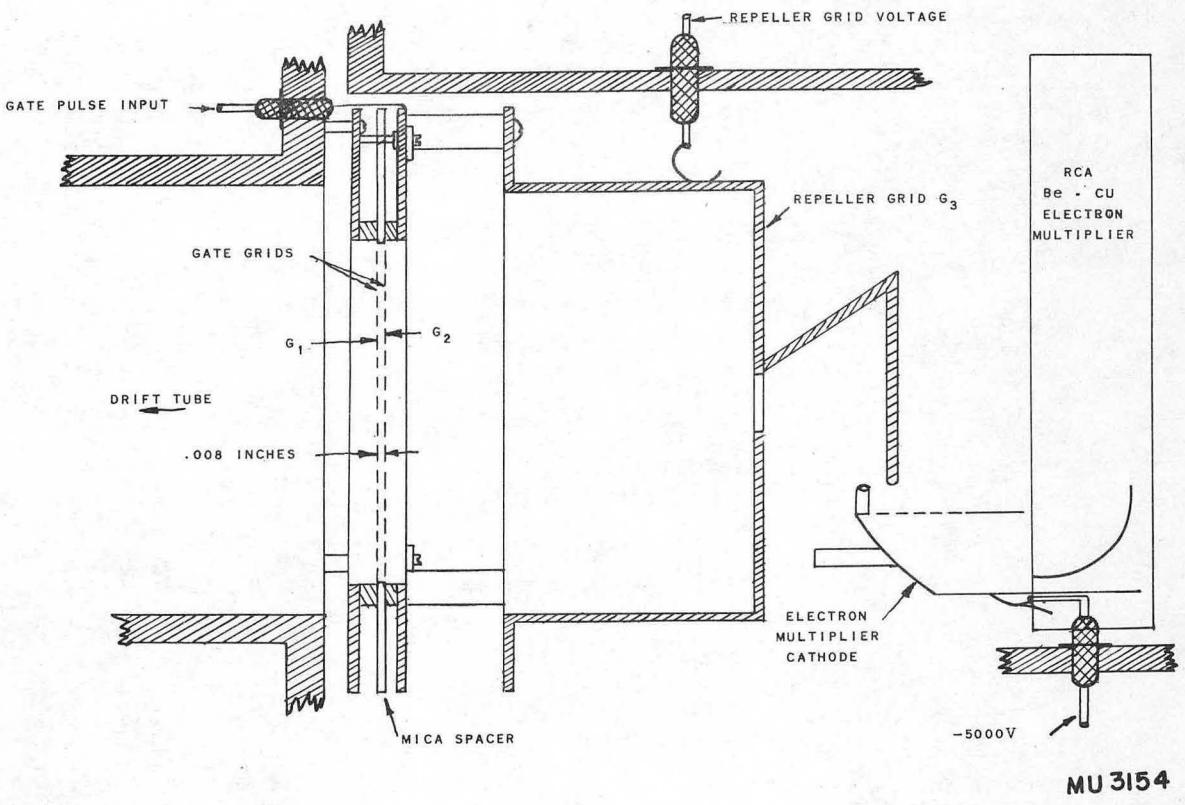
REPELLER GRID VOLTAGE
GATE PULSE INPUT
REPELLER GRID G_3
RCA
Be - CU
ELECTRON
MULTIPLIER
GATE GRIDS
G_1
G_2
DRIFT TUBE
.008 INCHES
ELECTRON
MULTIPLIER
CATHODE
MICA SPACER
-5000V
MU 3154

Fig. 19

(b) The transit time between the grids was four times as long as the present system.

(c) The detecting device was often affected by the fields from the pulse applied to the gate grid (G_2), since there was no electrical shielding between them.

(d) Neutral atoms emitted by the source and knocked out of the walls of the drift tube by the ion beam could strike the collector.

In the repeller grid system (Fig. 19) care must be taken that the transit time of ions between the gate grid (G_2) and the repeller grid (G_3) is long compared to the gate pulse width. In this way the ions can gain energy from the pulse between the gate grids and yet not lose much energy from the pulse between the gate grid (G_2) and the repeller grid (G_3).

In collecting radioactive samples it is necessary that the collector be shielded from the neutral atoms that may be emitted from the source. It is also desirable that ions collected be focused in a small area on the collector to simplify activity measurement.

Another requirement of the repeller grid system becomes evident from the following phenomena. A repeller grid was used that did not shield the collecting electrode from neutral particles from the source or drift tube walls.

(a) Secondary electrons are emitted by the gate grids or drift tube walls, when struck by positive ions. These are accelerated by the repeller grid, pass through it, and knock off positive ions on the other side. These positive ions are then accelerated again by the repeller grid field and are collected by the detector. A current can

then result that is not a function of the presence of the isotope to be analyzed.

(b) High energy neutral atoms may be knocked out of the drift tube walls or gate grid wires. These atoms may strike the collector and knock out secondary electrons, again causing a false current.

The electrode system shown in Fig. 19 greatly reduces these effects. The particle trajectories of several important cases are shown in Fig. 20. These are:

(a) Ions of the wrong mass that do not have enough energy to penetrate the repeller grid;

(b) Ions of the desired mass which have gained energy from the gate pulse, penetrate the repeller grid, and are collected by the detector;

(c) Secondary electrons emitted by the grids or drift tube walls;

(d) High energy neutral atoms which knock positive ions out of the partition in the repeller grid.

All other particles emitted cannot overcome potential barriers because of energy considerations. It is clear from these trajectories that the only current that can be collected without a tremendous loss factor is from positive ions of the proper mass. These trajectories were approximated by rolling steel balls on a rubber diaphragm field plot of the electrode system. They were then verified, as well as possible, by current measurements on the actual instrument.

The detector, which is shown in Fig. 19, consists of a 13-stage beryllium copper electron multiplier made by RCA, to which an extra cathode, made by the author, has been added. This electron multiplier has a current gain of about 50,000 and is used in conjunction with a

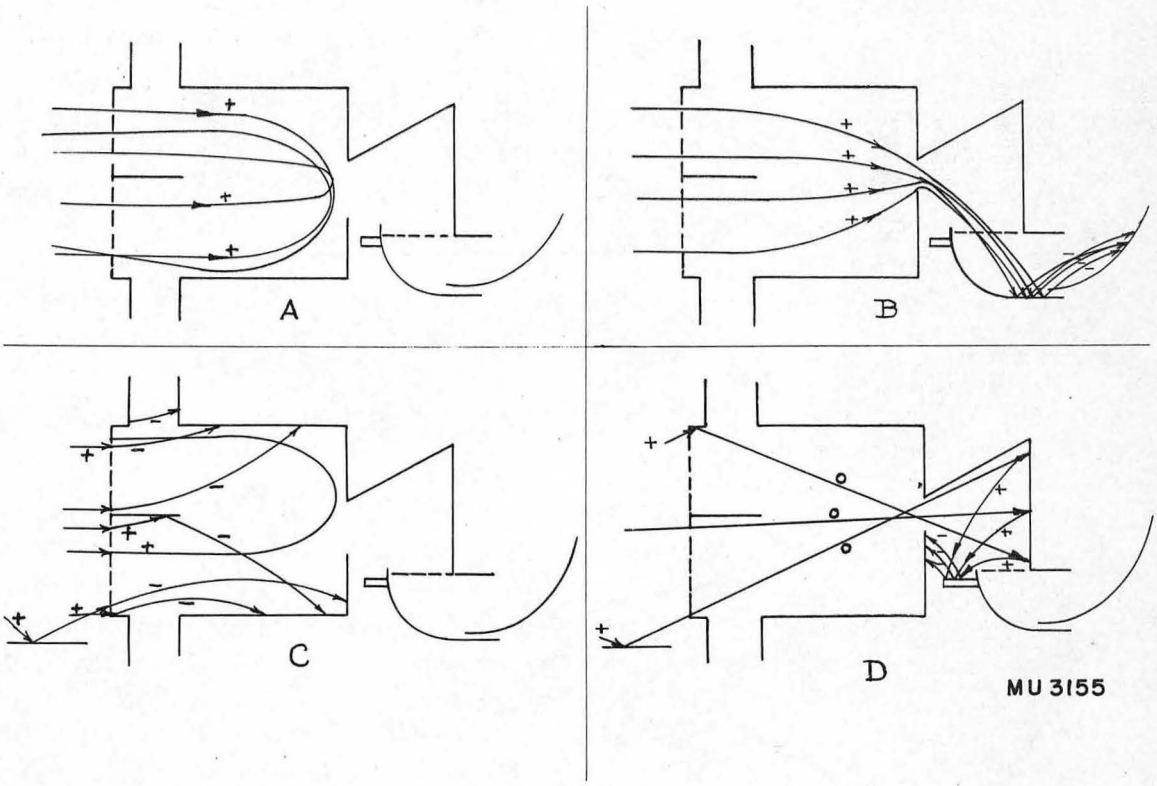

Fig. 20

vibrating-reed electrometer. The electrometer drives a speedomax recorder. With proper precautions this system can read a current of 10^{-17} amperes or lower.

2. Dual Isotope Collector System.-- Another collection system has been constructed for isotope separation which has two collector plates. By applying proper potentials to these plates two isotopes from the same sample can be separated without letting the system down to air.

Fig. 21 is a diagram of the dual isotope collector system. Radioactive samples are usually used with this. The isotopes are collected on standard one inch sample plates and are counted. In this system the ions to be collected penetrate the repeller grid R and are collected on either plate A or B. A relay switches each plate from ground potential to the repeller grid voltage. The fields are such that the ions that penetrate the repeller grid are focused on to the grounded collector plate. As the ion beam is switched back and forth between plate A and B the accelerating voltage is alternated between the values corresponding to the two isotopes to be separated. In this way one isotope is collected on plate A and the other on plate B.

Since the ion beam is on a plate only half of the time, this procedure reduces the effective transmission by a factor of two. Provision is made (not shown here) on the stepping relay for switching the ion beam five times as long on one plate as the other. In this way the effective transmission for one isotope may be increased at the expense of the other.

The position of the collector plates is such that they are shielded from the direct neutral atoms that may be emitted by the source.

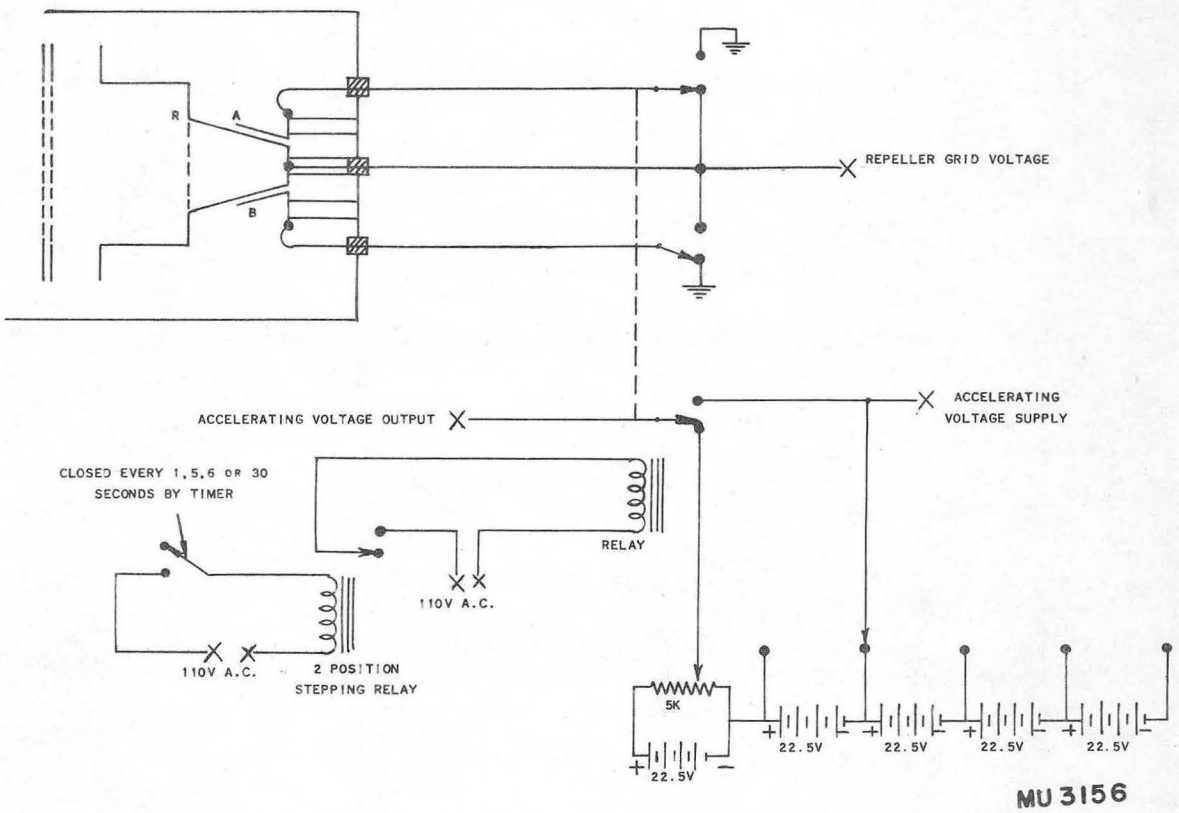
R
A
B
REPELLER GRID VOLTAGE
ACCELERATING VOLTAGE OUTPUT
ACCELERATING VOLTAGE SUPPLY
CLOSED EVERY 1, 5, 6 OR 30 SECONDS BY TIMER
RELAY
110V A.C.
110V A.C.
2 POSITION STEPPING RELAY
5K
22.5V
22.5V
22.5V
22.5V
22.5V
MU 3156

Fig. 21

J. Charge Neutralization

It was found that positive charges build up on insulated spots in the drift tube. This deflected the ion beam and changed the calibration of the instrument for high beam currents. A filament (f in Fig. 1) was placed in the drift tube. This emitted electrons which neutralized the areas which tended to accumulate positive charge.

A photograph of the assembled mass spectrograph vacuum chamber is shown in Fig. 22.

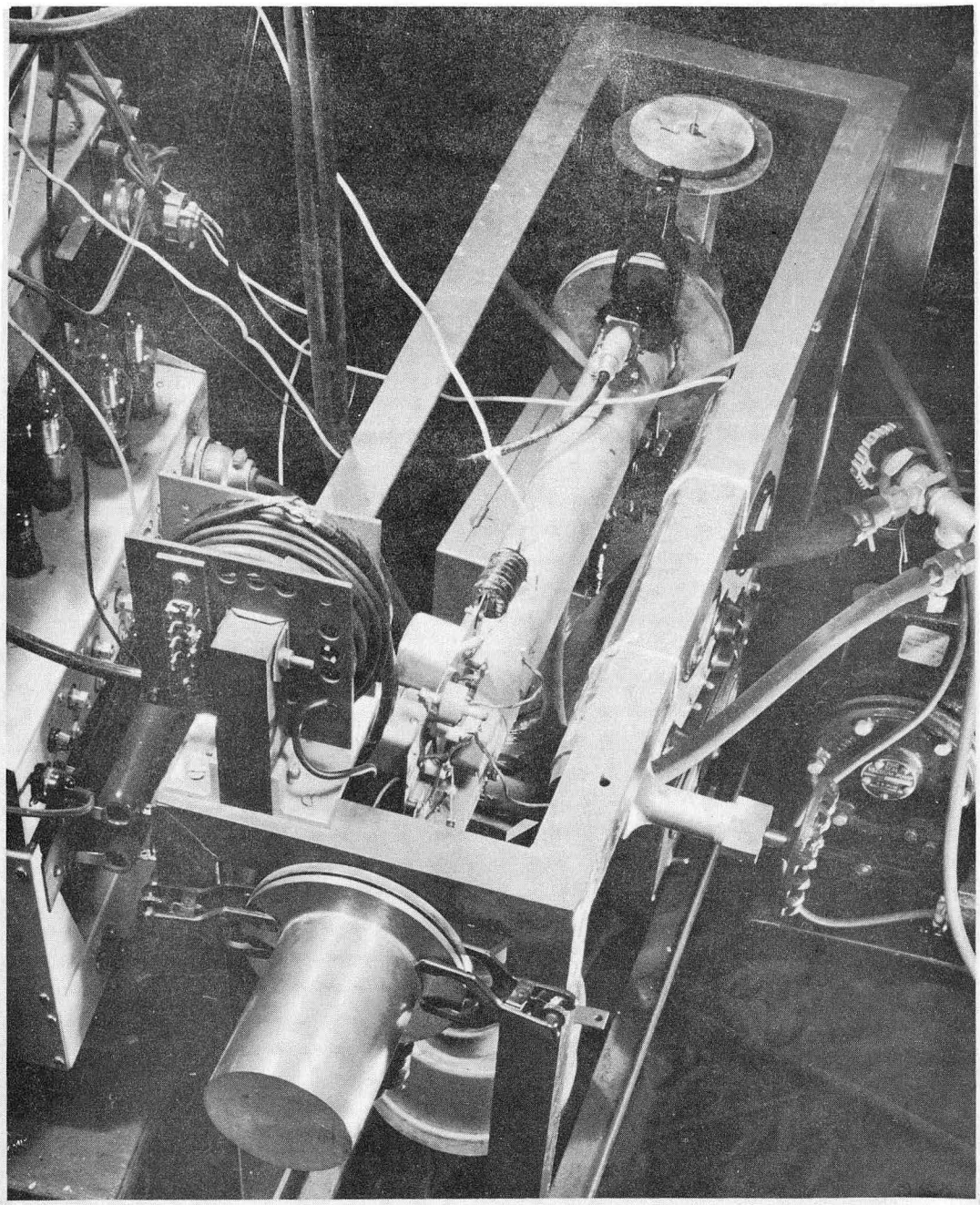

ZN 161

Fig. 22

IV. TYPICAL OPERATING PROCEDURE

This section will describe typical procedure in the calibration and operation of the time-of-flight mass spectrograph. The operating procedure includes all frequent checks that ensure the operator that the instrument is working properly. Fig. 23 is an outline of the instrument as built by the author showing the positions of the controls.

A. Calibration Procedure

1. Insertion of Standard.-- In the calibration of the instrument a standard sample is used. The solution containing the dissolved standard is dropped on the source filament by means of a pipette. The filament may be dried by warming it slightly. The author has found cesium and rubidium to be good for use as standards. These have masses high enough for adequate calibration up to mass 250. Both are efficiently ionized at a low temperature by a thermal source. They can be introduced along with the sample to be analyzed. In this way the instrument can be calibrated at a low source temperature. Later the filament temperature can be raised to the value at which the sample to be analyzed becomes ionized. Rubidium has the advantage of having two mass peaks (85 and 87) of an abundance ratio of about 3 to 1. This presents a characteristic simple spectrum.

2. Adjustment of Frequency Divider.-- The switch S_1 is turned to "Harmonic Eliminator On" and an oscilloscope is connected to each frequency divider successively. The dividers are adjusted to a dividing ratio of 5, 4, and 2, respectively, starting from the highest frequency.

3. Adjustment of the Pulsed Voltage Regulator.-- With the pulsed voltage regulator test button pressed the regulator adjustment is used to

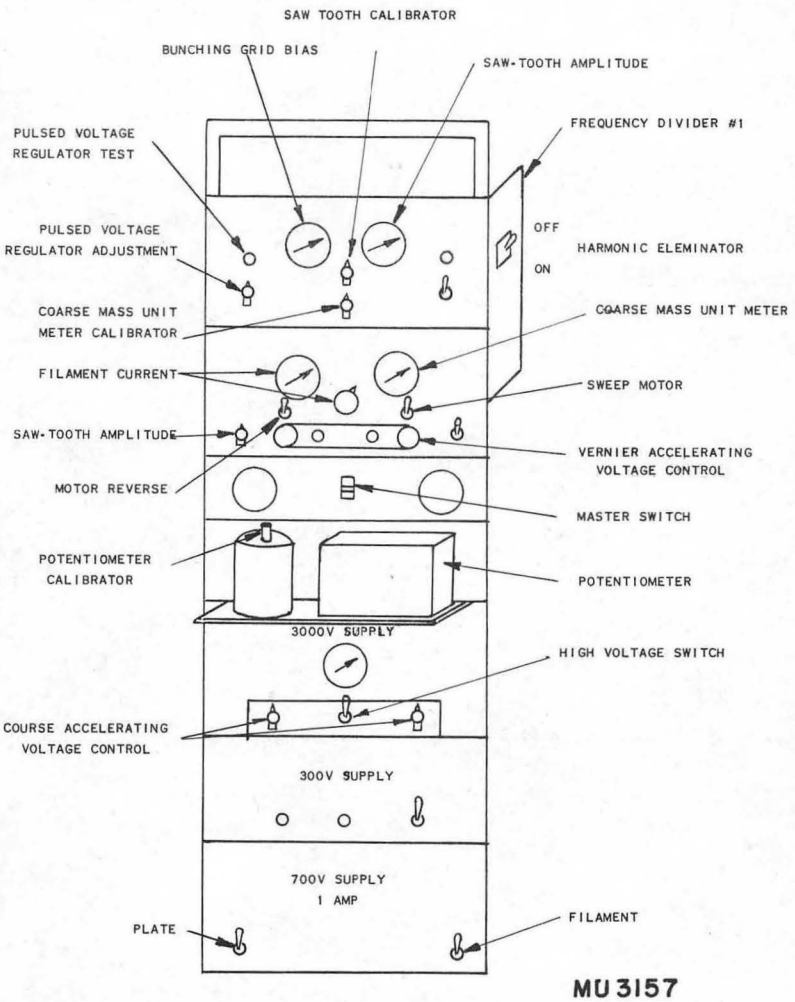
SAW TOOTH CALIBRATOR
BUNCHING GRID BIAS
SAW-TOOTH AMPLITUDE
FREQUENCY DIVIDER #1
PULSED VOLTAGE REGULATOR TEST
PULSED VOLTAGE REGULATOR ADJUSTMENT
OFF
ON
HARMONIC ELEMINATOR
COARSE MASS UNIT METER CALIBRATOR
COARSE MASS UNIT METER
FILAMENT CURRENT
SWEEP MOTOR
SAW-TOOTH AMPLITUDE
VERNIER ACCELERATING VOLTAGE CONTROL
MOTOR REVERSE
MASTER SWITCH
POTENTIOMETER CALIBRATOR
POTENTIOMETER
3000V SUPPLY
HIGH VOLTAGE SWITCH
COURSE ACCELERATING VOLTAGE CONTROL
300V SUPPLY
700V SUPPLY
1 AMP
PLATE
FILAMENT
MU 3157

Fig. 23

set the bunching grid bias at +50 volts. This places the direct coupled amplifier in its proper operating range.

4. Adjustment of Saw-tooth Voltage.-- With S_1 turned to "Harmonic Eliminator On" the filament current is raised until a current is detected in the electrometer. It may be necessary to sweep the accelerating voltage over the region where the standard is expected to be detected in order to find the beam as the filament warms up. When a current is detected the accelerating voltage is adjusted to maximize the electrometer reading. The current is then again maximized by adjusting the saw-tooth amplitude control. As a further check the accelerating voltage should be readjusted and the saw-tooth amplitude again maximized. The saw-tooth amplitude meter should then be adjusted by means of its calibrating resistor so that it reads the mass number of the sample detected.

This adjustment should be made with exactly the same saw-tooth voltage load as will be used when the machine is in operation. If an oscilloscope is connected to the bunching grids during operation, the saw-tooth amplitude should be adjusted with it connected.

5. Calibration of Potentiometer and Mass Unit Meter.-- With the adjustments made as in 4, the mass units meter calibrating resistor is adjusted so that the meter reads the mass of the standard. The potentiometer calibrating resistor is then adjusted so that the potentiometer reads 0.004 times the mass of the standard. (The potentiometer will read 1.000 for mass 250.)

To calibrate the instrument without the harmonic eliminator, the above procedure is followed with the "Harmonic Eliminator" switch in the "off" position.

B. Operating Procedure

1. Harmonic Eliminator Off.-- To detect or collect atoms of a certain mass the following adjustments are made:

Harmonic eliminator - off

Accelerating voltage - adjusted to the mass according to the calibration obtained above

Saw-tooth amplitude - adjusted to read the mass to be detected

The filament is then heated to the temperature at which ions of the sample are formed.

If it is desired to sweep over a mass region, the accelerating voltage vernier may be driven automatically by its motor. By recording the detected current on the speedomax recorder a plot is obtained of current vs. mass that has the same number of mass units per inch regardless of the mass detected.

2. Harmonic Eliminator On.-- To detect or collect atoms of a certain mass with the harmonic eliminator on the following adjustments are made:

Harmonic eliminator - on

Accelerating voltage - adjusted to the mass according to the calibration obtained

Saw-tooth amplitude - adjusted to read the mass to be detected

The filament is then heated to the temperature at which ions of the sample are formed.

The motor driven sweep may be used as described in A. It may be necessary to check the dividing ratio of the frequency divider periodically to ensure its proper operation. The saw-tooth amplitude in both A and B will usually remain proportional to the accelerating voltage. Only small adjustments should be necessary for a wide variation in accelerating voltage.

V. RESULTS

A. Resolution

Fig. 24 shows a current versus mass curve of rubidium obtained with the mass spectrograph with the harmonic eliminator off. The more abundant peak is the isotope of mass 85 and the other is of mass 87. The peak width at 1 percent of the peak height is approximately 2/3 of a mass unit. This value of peak width agrees very closely with that derived in the "Analysis of Operation."

Fig. 25 shows a curve of Cs^{133} and rubidium made with the same number of mass units per inch so that their resolution can be compared directly. These curves support the conclusion derived in the "Analysis of Operation" that the resolution in mass units is almost independent of the mass.

B. Stability

Table 1 shows the stability of the mass spectrograph calibration with the harmonic eliminator off and on. The values given indicate long time stability and are not affected by minor disturbances of the instrument such as changing the source or collector system. As this table shows, the stability with the harmonic eliminator off is excellent. The stability in this condition is usually better than $\pm 1/20$ of a mass unit.

The relative lack of stability with the harmonic eliminator on is probably due to the inaccuracy of the pulsed voltage regulator. This is partly caused by the inadequacy of the 6BN6 as a reference tube. One of the causes of this inadequacy is transit time effects from the short pulse width used as the gate. Other methods of regulating the bunching grid bias have resulted in comparable stability.

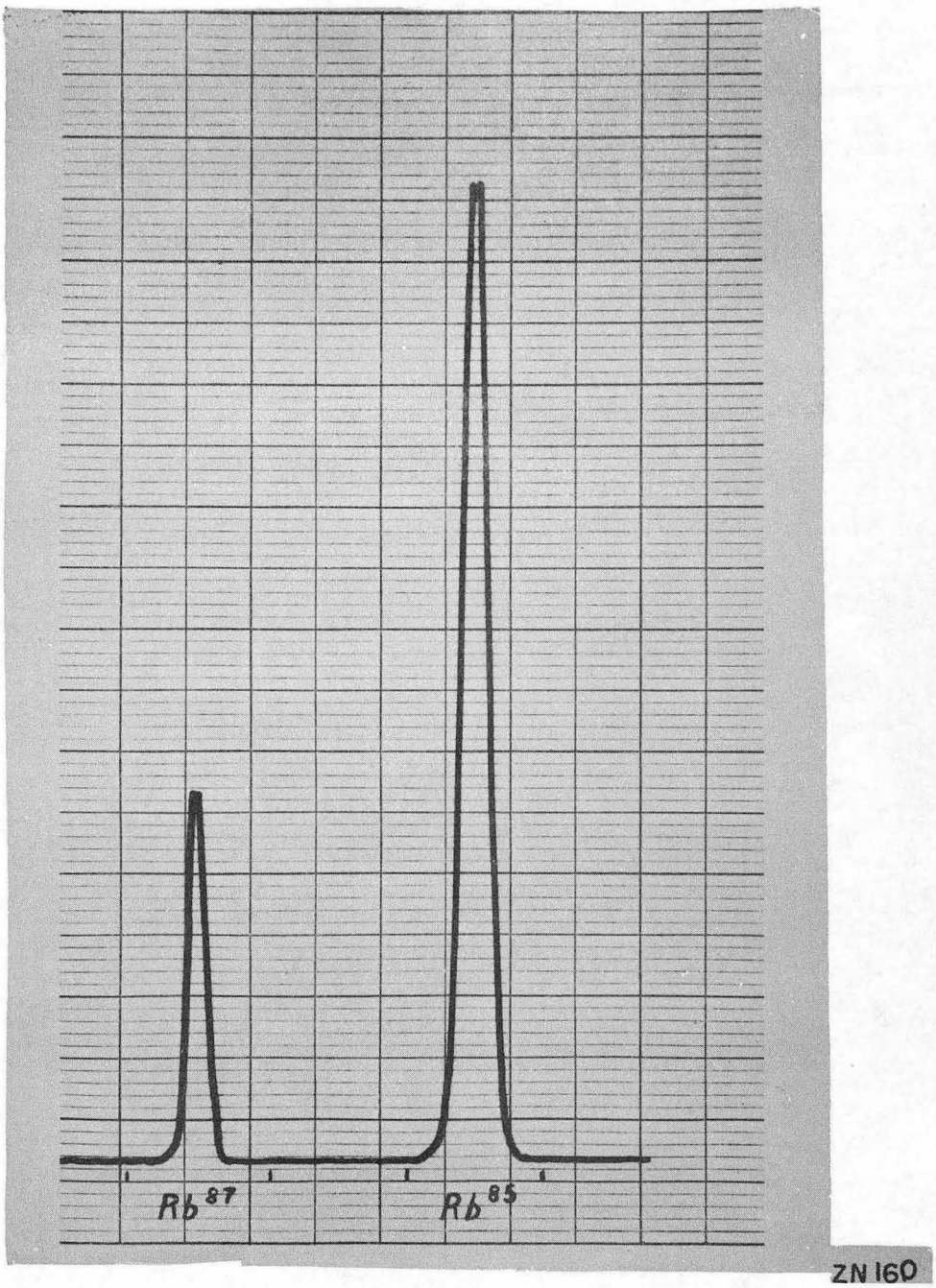

Fig. 24

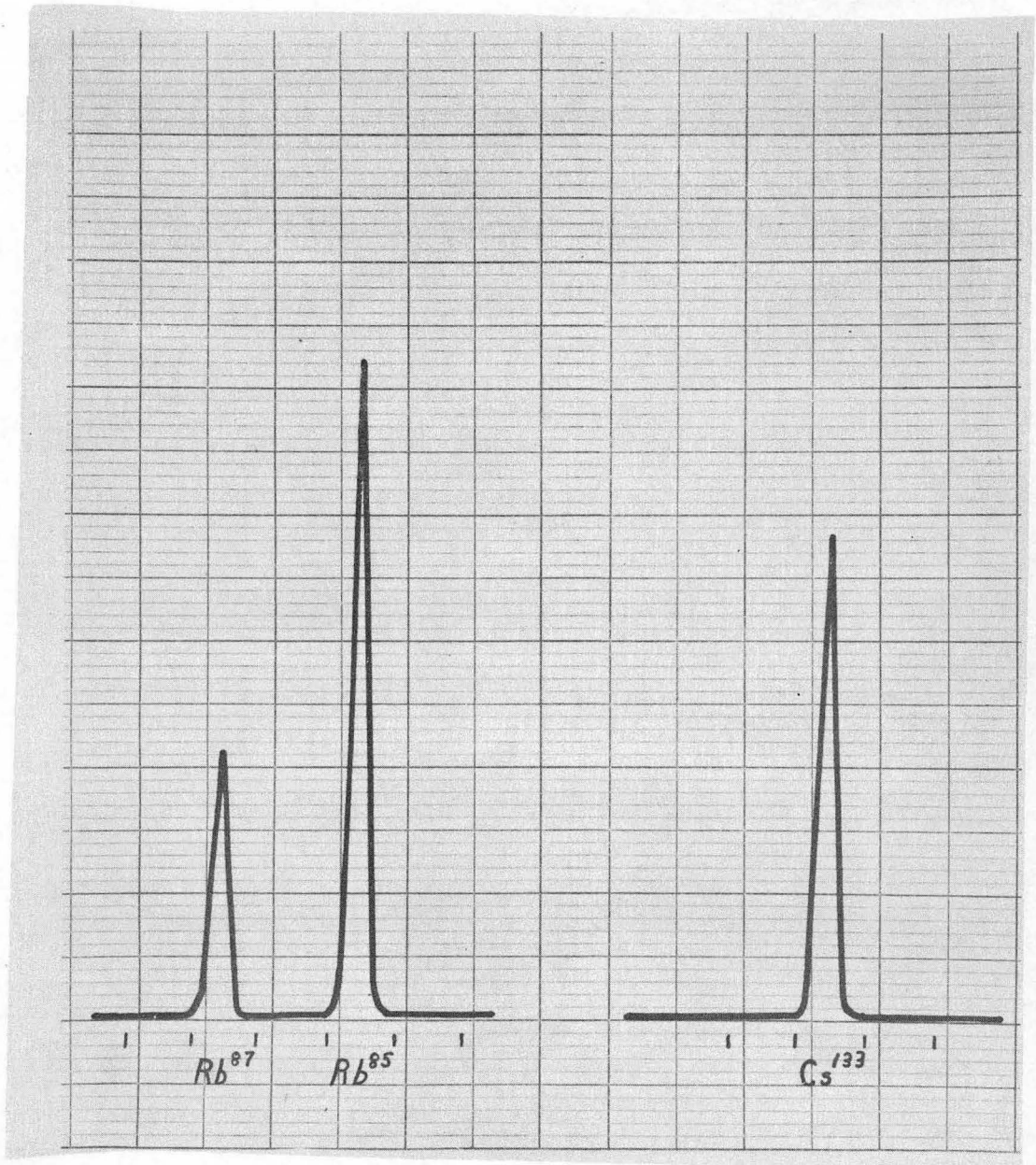

Fig. 25

Table 1

Calibration of the Mass Spectrograph

Ion	Mass (mass units)	Potentiometer Reading (theoretical) (volts)	Potentiometer Reading Harmonic Eliminator Off (volts)	Potentiometer Reading Harmonic Eliminator On (volts)
Rb^+	85	0.3400	0.3400 ± 0.0002	0.3390 ± 0.0015
Rb^+	87	0.3480	0.3480 ± 0.0002	0.3470 ± 0.0015
Cs^+	133	0.5320	0.5320 ± 0.0002	0.5310 ± 0.0015
Cs^+	137	0.5480	separated*	
Tl^+	204	0.8160	0.8160 ± 0.0002	0.8150 ± 0.0015
Tl^+	206	0.8240	0.8240 ± 0.0002	0.8230 ± 0.0015
Fr^+	212	0.8480	separated*	

*Isotope collected in proper mass position

C. Transmission

A rough determination of the transmission of the instrument was made by measuring the current collected by the first bunching grid and the current detected on the collector plate. Since the transparency of the bunching grid is known, the ion current emitted by the source could be calculated. Since the grid was made of tungsten wires, a tungsten collector plate was used so that the secondary ratio in both cases would be approximately the same. The dual isotope collector system was used in this measurement. The transmission obtained was 20 percent with the harmonic eliminator off. This value was reduced to 0.5 percent with the harmonic eliminator on.

D. Harmonic Elimination

Fig. 26 (top) shows a current versus mass curve of rubidium with the harmonic eliminator off. Harmonics of cesium can be seen to be present as well as those of rubidium. The unequal spacing of the harmonics is partly a real effect and partly due to the nonlinearity of the accelerating voltage sweep.

Fig. 26 (bottom) shows a sweep over the same range as above with the harmonic eliminator on. The harmonics were completely eliminated. However, there was a reduction in the current collected of a factor of 40. The resolution with the harmonic eliminator on is slightly worse. This is probably caused by the blanking pulse not rising perfectly linearly on top and not falling off fast enough on the trailing edge.

E. Collector Current

With the electron multiplier as detector currents as low as 10^{-17} amperes can be detected. Often an electrometer is used as the detector. Most calibration runs are made with a collector current of 10^{-10} amperes. It was found that above a current of a few microamperes space charge debunching occurred which reduced the resolution.

F. Isotope Separation

Standard one inch platinum sample plates were inserted in the plate holders of the dual collector system described earlier. A sample of Fr^{212}, that had been made in a cyclotron bombardment of protons on thorium, was placed on the source filament as francium sulphate. Masses 211 and 212 were separated in the mass spectrograph. The two sample

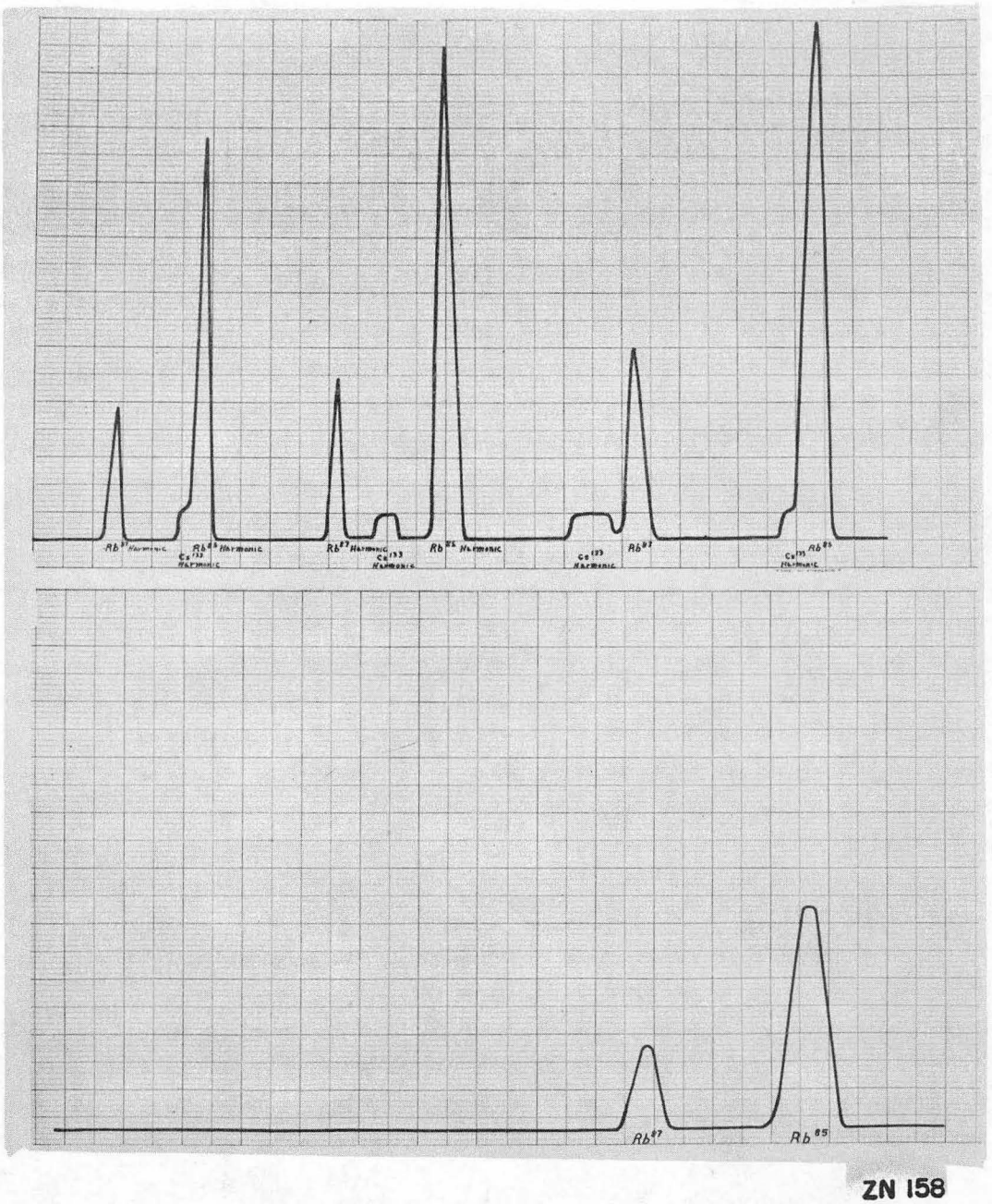
Rb87 Harmonic
Cs133 Harmonic
Rb85 Harmonic
Rb87 Harmonic
Cs133 Harmonic
Rb85 Harmonic
Cs133 Harmonic
Rb87
Cs133 Harmonic
Rb85
Rb87
Rb85
ZN 158

Fig. 26.

plates were then counted in the alpha pulse analyzer. The alpha activities that had previously been attributed to Fr^{212} and that of its daughter product Em^{212} were observed on the mass 212 sample plate and not on the 211 plate. This confirmed the mass assignment of Fr^{212} raising it from a class B to a class A assignment.

VI. CONCLUSIONS

A new type of mass spectrograph has been proposed. An experimental model has been constructed and found to operate satisfactorily. Preliminary experiments have been performed using the instrument as a separating device for the mass assignment of radioactive isotopes.

If another instrument is constructed for laboratory or commercial use, higher safety factors should be used, particularly in the harmonic eliminator. In such an instrument special consideration should be given to the following:

(a) Operate all components well within their power rating.

(b) Consider the placement and shielding of all components carrying high frequencies.

(c) Consider the stability of the frequency divider and the constancy of the time between its input and output pulses.

Under high transmission conditions with the harmonic eliminator off there is little need for recalibration or adjustment over long periods of time.

Theoretically and experimentally it has been shown that this type of mass spectrograph is a versatile instrument that can equal or surpass the performance of the conventional mass spectrograph in cases where transmission, stability, and reproducibility are important and where a peak width of 2/3 of a mass unit is adequate. This instrument has the added advantages of being more portable and less expensive than the conventional mass spectrograph. It will probably be of greatest value as an isotope separating device under high transmission conditions.

ACKNOWLEDGMENTS

The author wishes to express his appreciation of the assistance given him by Albert Ghiorso, Earl K. Hyde, Earl Hostetter, and H. P. Robinson.
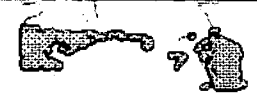
This work was done under the auspices of the United States Atomic Energy Commission.