Lawrence Berkeley National Laboratory
Recent Work

Title
THE CRYSTAL AND MOLECULAR STRUCTURE OF XENON BIS(OXOPENTAFLUOROSELENATE(VI)),Xe(OSeF5)2

Permalink
https://escholarship.org/uc/item/5cv729z7

Author
Templeton, Lieselotte K.

Publication Date
1976-04-01

eScholarship.org Powered by the California Digital Library
University of California

0 0 0 0 4 5 0 0 3 9 8

Submitted to Inorganic Chemistry

LBL-5104
Preprint c.1

THE CRYSTAL AND MOLECULAR STRUCTURE OF XENON BIS(OXOPENTAFLUOROSELENATE(VI)), $Xe(OSeF_5)_2$

Lieselotte K. Templeton, David H. Templeton,
Konrad Seppelt, and Neil Bartlett

April 1976

Prepared for the U. S. Energy Research and
Development Administration under Contract W-7405-ENG-48

For Reference

Not to be taken from this room

LAWRENCE BERKELEY LABORATORY
UNIVERSITY OF CALIFORNIA
BERKELEY

LBL-5104
c.1

DISCLAIMER

This document was prepared as an account of work sponsored by the United States Government. While this document is believed to contain correct information, neither the United States Government nor any agency thereof, nor the Regents of the University of California, nor any of their employees, makes any warranty, express or implied, or assumes any legal responsibility for the accuracy, completeness, or usefulness of any information, apparatus, product, or process disclosed, or represents that its use would not infringe privately owned rights. Reference herein to any specific commercial product, process, or service by its trade name, trademark, manufacturer, or otherwise, does not necessarily constitute or imply its endorsement, recommendation, or favoring by the United States Government or any agency thereof, or the Regents of the University of California. The views and opinions of authors expressed herein do not necessarily state or reflect those of the United States Government or any agency thereof or the Regents of the University of California.

0 0 0 0 4 5 0 5 3 9 9

Contribution from the Materials and Molecular Research Division, Lawrence Berkeley Laboratory, and Department of Chemistry, University of California, Berkeley California 94720

The Crystal and Molecular Structure of Xenon bis(oxopentafluoroselenate(VI)), $Xe(OSeF_5)_2$[1]

Lieselotte K. Templeton, David H. Templeton,* Konrad Seppelt[2] and Neil Bartlett

Received:

Crystals of $Xe(OSeF_5)_2$ are rhombohedral, space group $R\bar{3}m$. At 23.5°C the hexagonal axes are: a = b = 8.588(3), c = 11.918(3)Å, Z = 3, d_{calcd} = 3.345 gm cm^{-3}, V = 761.23Å^3. The molecule lies on a 3-fold axis, and there is orientational disorder of the oxygen and fluorine positions. X-ray diffraction data obtained with an automatic diffractometer were analyzed on the basis of a molecular model with some constraints based on chemical considerations to reduce the number of independent parameters of the poorly resolved oxygen and fluorine atoms. For 122 unique reflections with $F^2 > \sigma(F^2)$ and with anisotropic thermal parameters, R = 0.064. Bond distances are Xe-O = 2.12(5), Se-O = 1.53(5), and Se-F = 1.70(2)Å (uncorrected) and Se-F = 1.77Å (corrected for thermal motion).

Introduction

The synthesis[3] of xenon(II) bis(oxopentafluoroselenate(VI)) had provided a xenon(II) compound of relatively high thermal stability and melting point. Several substitutional derivatives of xenon difluoride had previously been obtained,[4,5] but hitherto $FXeOSO_2F$ was the sole compound for which a full crystal structure had been reported.[6] In this paper in which we describe the single crystal x-ray diffraction analysis of $Xe(OSeF_5)_2$ we have the first description of Xe(II) bound symmetrically to two oxygen ligands.

Experimental Section

Xenon(II) bis(oxopentafluoroselenate(VI)) was prepared from xenon difluoride and pentafluoroselenic acid, $HOSeF_5$, as previously described.[3] Crystals were grown by sublimation in Teflon-FEP tubing under dynamic vacuum. Raman spectra of the crystals studied established that they were representative of the bulk material.[7] The hydrolytically unstable crystals, which were pale yellow tablets, were loaded in a nitrogen-filled Vacuum Atmospheres DRILAB, into 0.2 mm diameter thin-walled quartz capillaries. The capillaries were sealed in a small flame.

After preliminary study of several crystals by the precession method, diffractometer measurements were made of a crystal which did not have well defined faces. Its dimensions were approximately 0.11 × 0.13 × 0.22 mm. Unit cell dimensions were determined from 9 hand-centered reflections ($36<2\theta<42°$) measured with a Picker FACS-I auto-

matic diffractometer which was equipped with a graphite monochrometer and used Molybdenum radiation (λ = 0.70926Å for $K\alpha_1$). The same instrument was used to collect the intensity data. The integrated intensity of each reflection was measured using a θ - 2θ scan technique with a scanning rate of 1°/min from 0.6° below the 2θ angle at which $K\alpha_1$ was diffracted to 0.6° above the 2θ angle at which $K\alpha_2$ was diffracted. Two 20-sec background counts were taken with the apparatus stationary and offset 0.5° from each end of the scan. Three strong reflections (330, 404, 033) were checked every 100 reflections for crystal decomposition and/or instrument malfunction. There was no decay within the accuracy of the measurements. Reflections were collected in the hemisphere $\pm h, \pm k, \pm l$ to 2θ of 45°. Of 723 reflections which were measured, 140 are unique. For 123 of them $F^2 > \sigma(F^2)$. The strongest reflection, 110, was calculated to be even stronger than observed and appeared to suffer from some unidentified experimental error; it was assigned zero weight in the refinement.

Absorption corrections calculated by an analytical integration[8] ranged from 2.337 to 4.602. Their validity was justified by multiple measurements of two reflections at various azimuthal angles.

Crystal Data

The crystals are rhombohedral, space group $R\bar{3}m$, with hexagonal unit cell dimensions at 23.5 ± 1°C: a = b = 8.588(3), c = 11.918(3), Z = 3, d_c = 3.345 gm cm^{-3}, V = 761.23Å^3, molecular weight = 511.20 gm, μ = 102.71 cm^{-1}.

For the rhombohedral cell containing one molecule, a = 6.354(2)Å, α = 85.04(2)°.

Structure Determination

The structure was solved by Fourier and least-squares methods. Scattering factors for neutral Xe, Se, O and F were taken from Doyle and Turner[9] and the anomalous dispersion correction from Cromer and Liberman.[10] The Laue symmetry $\bar{3}$m and the lack of systematic absences, other than those of the rhombohedral lattice, limit the choice of space groups to R32, R3m and R$\bar{3}$m. The centric group R$\bar{3}$m was adopted for reasons discussed later. The xenon atom is at the origin, and the positions of two selenium atoms above and below it on the three-fold axis are obvious from the Patterson function. Electron density maps, phased by the heavy atoms, show the fluorine and oxygen atoms as peaks at the corners of an octahedron around each selenium atom, but because of the 3-fold symmetry no particular peak could be assigned to oxygen. On the basis of previous spectroscopic work[7] it was apparent that the oxygen atom of the $OSeF_5$ ligand was linked to the Xe atom. We made this assumption in the assignment of electron density peaks. We also assumed that in each orientation of the molecule the O-Xe-O angle was 180°. The molecules must have disorder among three orientations, with oxygen and fluorine in the three positions with one-third and two-thirds probability respectively. The peak shapes are irregular and suggest that they are almost resolved into separate peaks for the alternate orientations.

Space group R32 offers no alternative for the positions of Xe and Se; R3m permits two different Xe-Se distances, but such a difference is chemically unrealistic. Neither of these noncentric groups permits any escape from the orientational disorder, and in the face of the large amplitudes of thermal motion, together with the disorder, it is implausible that the lower symmetry could be maintained. For these reasons the centric group $R\bar{3}m$ was used in the analysis.

A model was tested which assigned a single atom to each peak (four distinct atoms in the asymmetric unit), with scattering power of one-third oxygen and two-thirds fluorine for the peak which bridged between Xe and Se. Least-squares refinement, with individual anisotropic thermal parameters (18 independent parameters in all) reduced $R_1 = \Sigma|\Delta F|/\Sigma|F_o|$ to 0.061 and $R_2 = [\Sigma w(\Delta F)^2/\Sigma wF_o^2]^{1/2}$ to 0.085 for 122 reflections. This model gives reasonably good agreement with the diffraction data, but fails to give molecular dimensions which differentiate the role of oxygen and fluorine in the structure.

Several attempts were made to determine independent parameters for oxygen and fluorine, which of necessity were assigned to the three molecular orientations with one-third probability. Refinement reduced R_2 as low as 0.059, but the resulting bond distances and thermal parameters were unrealistic. We conclude that the data are insufficient to permit valid refinement of so many independent variables which are highly correlated with each other.

The model finally adopted, Figure 1, used this approach, but several chemically plausible constraints beyond those required by the space group were imposed. It consists of the superposition of three molecules with

identical Xe and Se positions. One of these molecules is shown in Figure 2. The three crystallographically independent Se-F bond lengths are constrained to be equal, the F(1)-Se-F(3) bond angle is required to be 180°, and F(1) and F(3) are given equal thermal parameters, as are F(2) and O. These constraints on the thermal parameters are in harmony with the fact that selenium has the smallest thermal parameters of any atom in the structure, including xenon, and with the concept of a relatively rigid $OSeF_5$ group. The molecule has 2/m symmetry, and F(2) and O are constrained to lie in the mirror plane. With this model of 6 atoms in the asymmetric unit and anisotropic thermal parameters (22 independent parameters in all) the full matrix least-squares refinement reduced R_2, the quantity minimized, to 0.080 and R_1 to 0.064 for 122 reflections with $F^2 > \sigma(F^2)$. We used $\sigma^2(F^2) = s^2(F^2) + (0.10F^2)^2$; $s^2(F^2)$ is the variance of F^2 based on counting statistics or alternatively that based on the scatter of measurements of equivalent reflections when the latter exceeds 16 times the former. The factor 0.10 which reduced the effect of strong reflections was chosen by trial and error to give a flat distribution of $\langle w(\Delta F)^2 \rangle$ as a function of magnitude of F; $w = (\sigma(F))^{-2}$, or zero for reflections weaker than $\sigma(F^2)$. The standard deviation of observation of unit weight was 1.345. In the last cycle, no parameter changed more that 0.0045σ. Final parameters are listed in Table I.[11]

Discussion

The bond angles are listed in Table II. The F-Se-F angles in each $OSeF_5$ group, other than the two constrained to be 180°, are 90° within the experimental accuracy, and thus correspond to a regular octahedral configuration. The O-Se-F(2) angle deviates by 10° from linearity, a deviation which although outside the accuracy limits estimated by least squares, nevertheless has rather doubtful significance in view of the constrained nature of the model. For the same reason the Xe-O-Se angle, 125(2)°, may not be as accurate as indicated.

The bond distances are: Xe-O = 2.12(5), Se-O = 1.53(5) and Se-F = 170(2)Å, uncorrected for thermal motion. It is clear that thermal motion effects are significant, and a correction based on the riding model gives a weighted average of 1.77Å for the Se-F bonds. Thermal corrections for bonds to oxygen are not reported because the thermal parameters of this atom were not determined independently, and because the propriety of the riding model is doubtful. We estimate that the effects for oxygen are less than for fluorine.

Figure 3 shows how the dumb-bell shaped molecules, one per primitive cell, pack in the pseudocubic rhombohedral unit cell. The packing is dominated by the interactions of the nearly spherical fluoroselenate groups; from this point of view the structure is nearly body-centered cubic. It is evident from a comparison of the vibrational spectra[7] of $Xe(OSeF_5)_2$ and $OSeF_5^-$ salts that the $OSeF_5$ group in the xenon compound is not simply ionic. In particular the ν Se-O in $KOSeF_5$ is ~920 cm^{-1} whereas in the xenon compound the highest frequency fundamentals lie

at 791 and 731 cm^{-1}. Unfortunately the alkali oxopentafluoroselenates(VI) are all cubic[7] and the anions are evidently disordered. The $OSeF_5^-$ ion has therefore not been defined. We can be sure, however, that the O-Se distance of 1.53(5)Å observed in $Xe(OSeF_5)_2$ is longer than that which occurs in the discrete anion. Moreover, the Xe-O distance of 2.12(5)Å is less than one would anticipate for a Xe^{2+} cation $OSeF_5^-$ anion contact. The Xe-O distance is indeed not significantly different from the Xe-O distance of 2.155(8)Å observed[6] in the $FXe\text{-}OSO_2F$ compound. The Xe-O-Se angle of 125(2)° is also similar to the Xe-O-S angle (123.7(5)°) found[6] in $FXeOSO_2F$. Evidently the Xe-O bonding is essentially the same in both $Xe(OSeF_5)_2$ and $FXeOSO_2F$ with the orbital hybridization of the oxygen atom approximately sp^2. It is of interest that the Xe-O-Se(S) angles are significantly different from those recently observed[12] in these laboratories in the compound $U(OTeF_5)_6$ where the U-O-Te angle is ~170°. Although ligand crowding in the $U(OTeF_5)_6$ compound alone could account for the approach to linearity it is also possible that π bonding throughout the U-O-Te three-center system may be the inherent reason for the greater angle. π-Bonding influences are considered by us to be much less likely for the Xe containing systems. As in XeF_2, $FXeOSO_2F$ and related molecules we assume that the canonical forms $((F_5SeOXe)^+OSeF_5^-)$ and $(F_5SeO^-(XeOSeF_5)^+)$ are dominant.

Crystals of the corresponding tellurium compound, $Xe(OTeF_5)_2$, were found to be orthorhombic (space group Cmca),[5] but a detailed structure has not been determined. The unit cell and symmetry require the molecular axes to have two orientations rather than the single one found in the selenium compound. It is intriguing that the molecules of these two

substances, which one supposes will be similar in size and shape (apart from the relatively subtle changes anticipated to accompany substitution of Se by Te), pack somewhat differently. It is of interest also that KrF_2 and XeF_2, which are both tetragonal, pack with two perpendicular orientations of the linear molecules in the krypton compound[13] and all parallel orientations in the xenon compound.[14] All of these molecules (to a first approximation at least) possess quadrupolar character but it is of interest that none adopts the Pa3 space group utilized by CO_2.[15] It has been suggested that quadrupolar interactions determine the molecular orientations of CO_2 in this cubic structure.[16] Evidently the factors which determine the packing arrangement of such molecules are subtle indeed.

Supplementary Material Available: A listing of structure factor amplitudes (1 page). Ordering information is given on any current masthead page.

REFERENCES AND NOTES

1. Work supported by the U.S. Energy Research and Development Administration and by a grant (to K.S.) from the Deutsche Forschungsgemeinschaft.

2. Present address: University of Heidelberg, 69 Heidelberg, Im Neuenheimer Feld 7, W. Germany

3a. K. Seppelt, Angew. Chem., 84, 715 (1972); Angew. Chem. internat. Edit., 11, 723 (1972).

b. K. Seppelt and D. Nothe, Inorg. Chem., 12, 2727 (1973).

4. N. Bartlett and F. Sladky, The Chemistry of Krypton, Xenon and Radon, Comprehensive Inorganic Chemistry, Pergamon Press, Oxford and New York, 1973, p213.

5. F. Sladky, Monatsh. Chem., 101, 1559 (1970).

6. N. Bartlett, M. Wechsberg, G. R. Jones and R. D. Burbank, Inorg. Chem., 11, 1124 (1972).

7. K. Seppelt, Z. anorg. allg. Chem., 399, 87 (1973).

8. L. K. Templeton and D. H. Templeton, Amer. Crystallogr. Assoc. Prog. Abstr., Ser. 2, 1, 143 (1973).

9. P. A. Doyle and P. S. Turner, Acta Crystallogr., Sec. A 24, 390 (1968).

10. D. T. Cromer and D. Liberman, J. Chem. Phys., 53, 1891 (1970).

11. See note at end of paper concerning supplementary material.

12. L. K. Templeton, D. H. Templeton, K. Seppelt, and N. Bartlett, to be published.

13. R. D. Burbank, W. E. Falconer, W. A. Sunder, Science, 178, 1285 (1972).

14. S. Siegel and E. Gebert, J. Am. Chem. Soc., 85, 240 (1963).

15. J. de Smedt, Koninkl. Ned. Akad. Wetenschap. Proc., 27, 839 (1924).

16. A. D. Buckingham, Quart. Rev., 13, 183 (1959).

Table I. Atomic parameters and Esd's.[a]

Atom	x	y	z	B_{11}[b]	B_{22}	B_{33}	B_{12}	B_{13}	B_{23}
Xe	0	0	0	14.8(2)	14.8	7.7(2)	7.4	0	0
Se	0	0	.2723(2)	8.5(2)	8.5	7.5(2)	4.2	0	0
F(1)	-.201(2)	-.074(16)	.207(2)	9.7(10)	23.5(77)	11.0(10)	8.7(32)	-2.8(9)	-1.2(19)
F(2)	-.077(2)	.077	.378	13.7(21)	13.7	12.4(20)	10.8(21)	-1.4(6)	1.4
F(3)	.201	.074	.337	9.7	23.5	11.0	8.7	-2.8	-1.2
O	.055(2)	-.055	.164(5)	13.7	13.7	12.4	10.8	-1.4	1.4

[a]Estimated standard deviation of last digit is enclosed in parenthesis; if none is given, the parameter is subject to a constraint.

[b]The form of the temperature factor is $\exp\left[-0.25\left(B_{11}\, h^2 a^{*2} + 2B_{12}\, hka^*b^* + \ldots\right)\right]$

0004503404

Table II. Bond Angles (deg) with Esd's.

O-Xe-O	180[a]
F(1)-Se-F(1')	88(8)
F(1)-Se-F(2)	88(3)
F(1)-Se-F(3)	180[b]
F(1)-Se-F(3')	92(8)
F(1)-Se-O	85(2)
F(2)-Se-F(3)	92(3)
F(2)-Se-O	170(2)
Xe-O-Se	125(2)
F(3)-Se-F(3')	88(8)
F(3)-Se-O	95(2)

[a]By symmetry. The diffraction data, with the disorder, would permit alternative values of 141°, but these are rejected on chemical grounds.

[b]Assumed value.

FIGURE CAPTIONS

Figure 1. $Xe(OSeF_5)_2$ molecule. Disorder model.

Figure 2. $Xe(OSeF_5)_2$ molecule as refined by least squares; three of these molecules are superimposed to give the disorder model shown in Figure 1.

Figure 3. Molecular packing of $Xe(OSeF_5)_2$. The upper diagram shows the arrangement with respect to the primitive rhombohedral unit cell with a = 6.354Å and α = 85.04°. The 3-fold axis is horizontal. In the lower diagram the origin is shifted to a fluoroselenate ion to show the nearly body-centered packing in the nearly cubic cell.

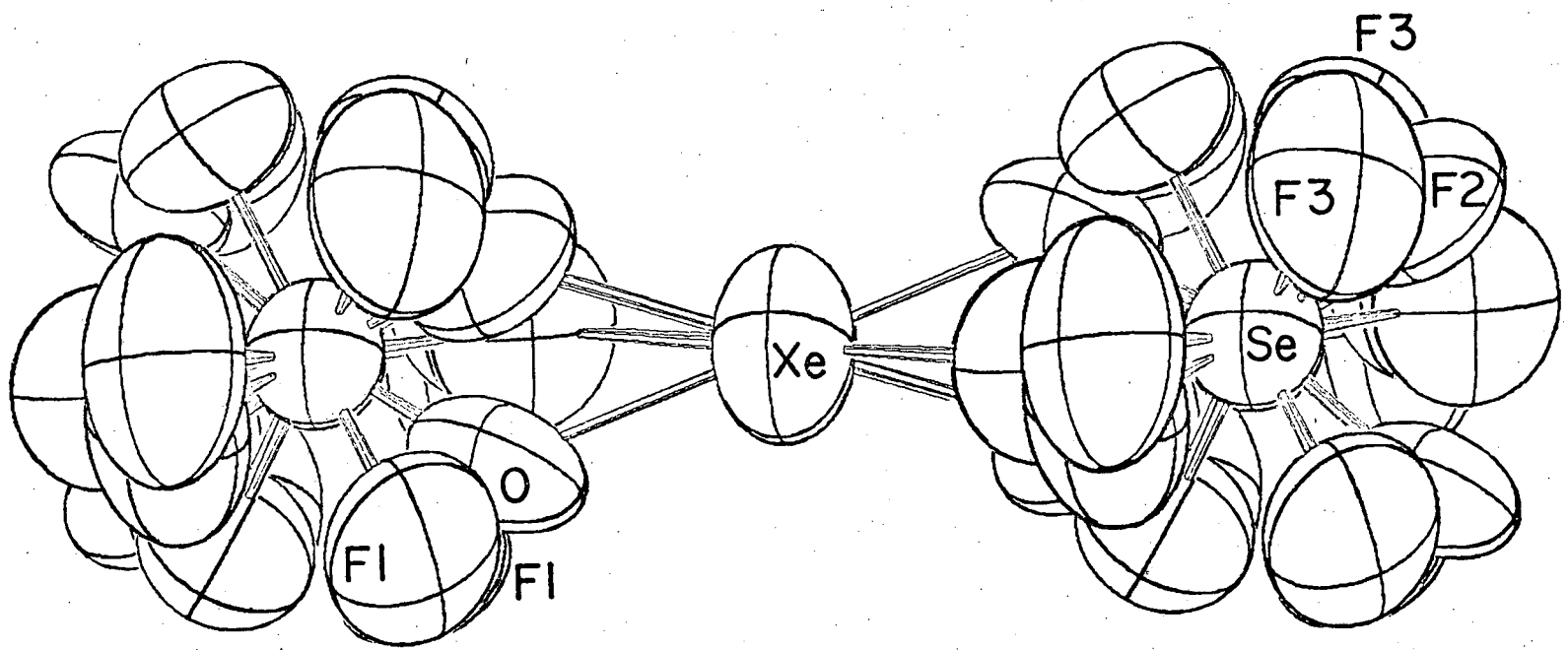

XBL 764-1179

Fig. 1

0 0 0 0 4 5 0 5 4 0 6

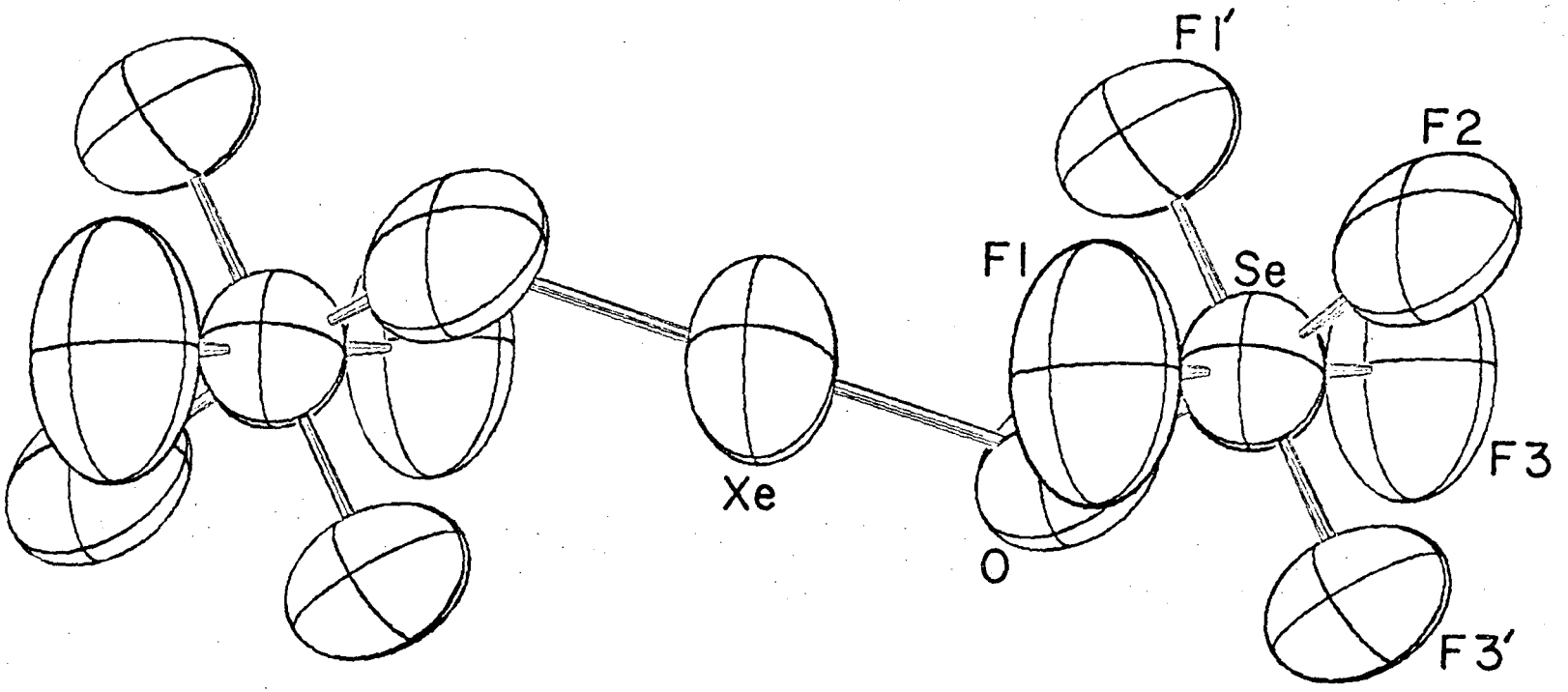

XBL 764-1180

Fig. 2

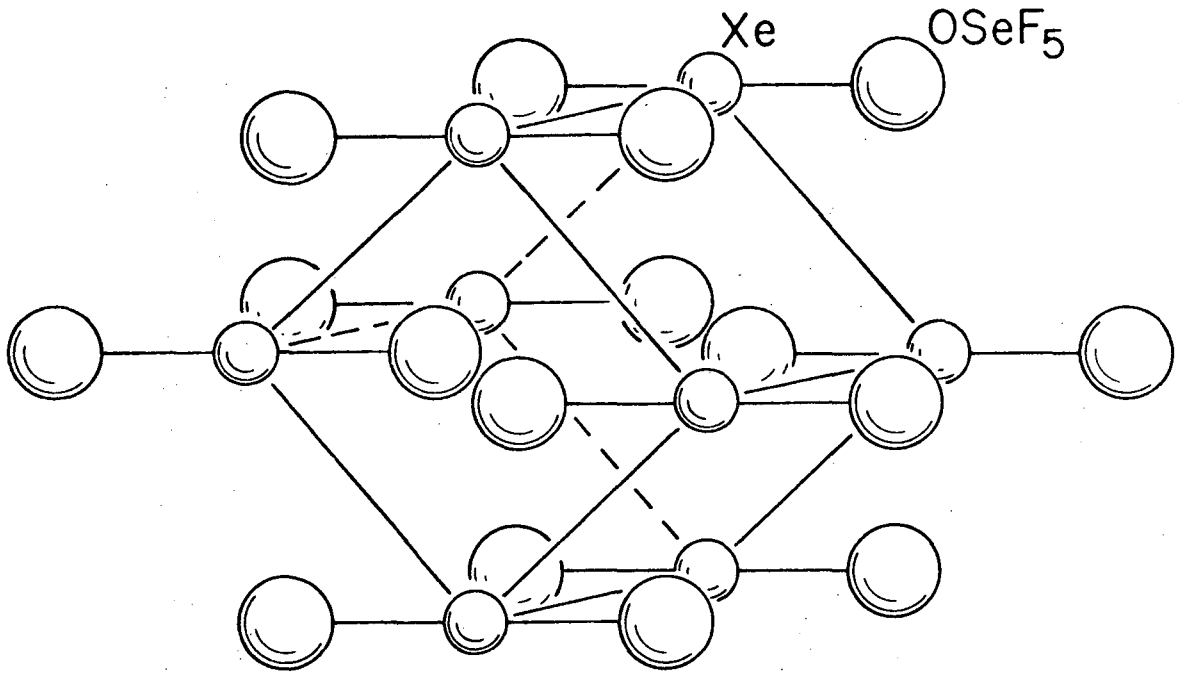

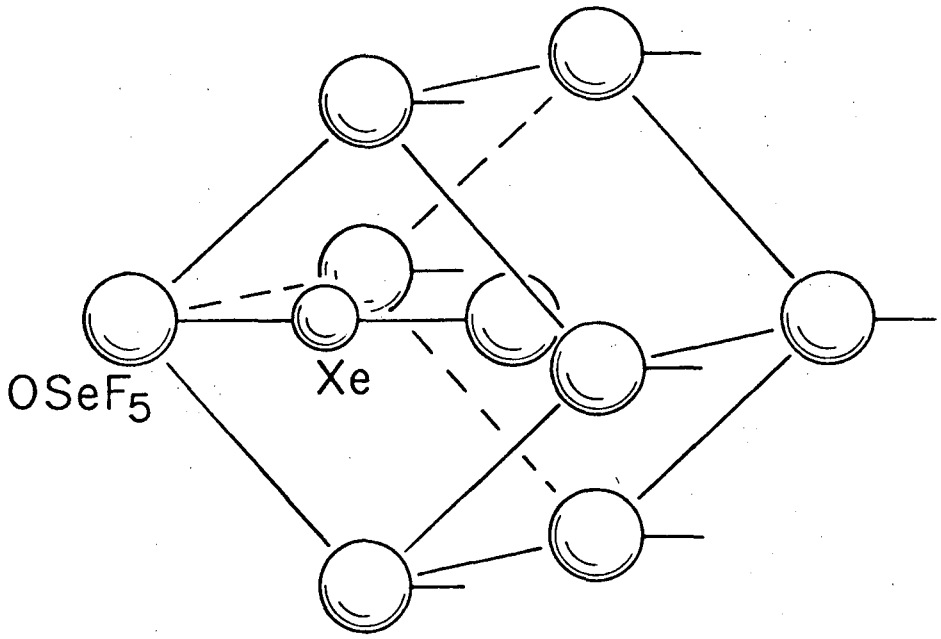

XBL 764-1225

Fig. 3

OBSERVED STRUCTURE FACTORS, STANDARD DEVIATIONS, AND DIFFERENCES (ALL X 1.0)
XE(OSFF5)2 F(0,0,0) = 682

FOB AND FCA ARE THE OBSERVED AND CALCULATED STRUCTURE FACTORS.
SG = ESTIMATED STANDARD DEVIATION OF FOB. DEL = /FOB/ - /FCA/.
* INDICATES ZERO WEIGHTED DATA.

L	FOB	SG	DEL	L	FOB	SG	DEL	L	FOB	SG	DEL	L	FOB	SG	DEL	L	FOB	SG	DEL
H,K=		0,	0	1	89	5	-3	11	32	2	-1	7	35	2	-1	H,K=		5,	0
3	224	11	17	4	182	10	9	H,K=		2,	1	10	6	3	1	2	40	2	1
6	55	3	-3	7	99	5	10	1	71	4	-5	H,K=		3,	3	5	8	1	0
9	6	3	3	10	18	1	1	4	153	8	-5	0	69	4	-3	8	11	2	-1
12	8	5	-2	H,K=		1,	1	7	88	5	-1	3	33	2	-2	H,K=		5,	1
H,K=		0,	1	0	288	15	-80*	10	10	1	1	6	5	6	-2*	1	6	2	1
2	118	6	10	3	157	8	15	H,K=		2,	2	9	6	2	1	4	33	2	1
5	57	3	4	6	16	1	0	0	110	6	-5	H,K=		3,	4	7	15	1	-0
8	66	3	6	9	14	1	2	3	72	4	-3	2	18	1	-2	H,K=		5,	2
11	38	2	-0	12	8	2	-0	6	13	1	1	5	4	5	-2*	0	35	2	-1
H,K=		0,	2	H,K=		1,	2	9	9	2	-2	8	7	2	-0	3	17	2	2
1	86	4	-3	2	15	1	-0	H,K=		2,	3	H,K=		3,	5	6	4	4	-2*
4	128	7	-2	5	3	2	-2	2	32	2	3	1	4	4	3*	H,K=		5,	3
7	96	5	5	8	45	2	-1	5	9	1	-1	4	13	1	2	2	7	1	-4
10	16	1	3	11	28	1	-1	8	19	1	-0	H,K=		4,	0	5	5	2	0
H,K=		0,	3	H,K=		1,	3	H,K=		2,	4	1	37	2	2	H,K=		5,	4
3	74	4	11	1	38	2	-4	1	5	2	-1	4	107	6	1	1	4	5	3*
6	6	1	1	4	87	4	-2	4	44	2	0	7	46	2	0	H,K=		6,	0
9	16	1	-1	7	57	3	-4	7	21	1	-2	10	7	1	3	0	39	2	-0
H,K=		0,	4	10	7	2	0	H,K=		2,	5	H,K=		4,	1	3	19	2	2
2	8	1	2	H,K=		1,	4	3	19	2	0	0	85	4	0	6	2	5	-2*
5	5	2	-1	3	39	2	-1	6	4	3	-4	3	45	2	-8	H,K=		6,	1
8	27	2	2	6	15	1	1	H,K=		2,	6	6	8	1	3	2	8	2	-4
11	16	1	-1	9	6	2	-2	2	2	4	-8*	9	3	4	-2*	5	2	4	-2*
H,K=		0,	5	H,K=		1,	5	5	0	4	-5*	H,K=		4,	2	H,K=		6,	2
1	9	1	0	2	23	1	1	H,K=		3,	0	2	32	2	-0	1	4	4	3
4	53	3	2	5	8	4	-3	0	135	7	3	5	7	3	1	4	11	1	-1
7	27	2	-3	8	13	1	2	3	105	6	-7	8	9	1	-2	H,K=		6,	3
10	3	5	0*	H,K=		1,	6	6	17	1	1	H,K=		4,	3	0	12	1	2
H,K=		0,	6	1	6	6	3*	9	10	3	-1	1	5	5	4*	H,K=		7,	0
3	22	1	-0	4	20	1	3	H,K=		3,	1	4	22	1	-1	1	3	5	2*
6	8	2	-2	7	12	1	1	2	55	3	-2	7	11	1	-2	4	14	1	1
H,K=		0,	7	H,K=		1,	7	5	23	1	-2	H,K=		4,	4	H,K=		7,	1
2	7	2	-5	3	8	1	1	8	26	1	-3	0	22	1	1	0	14	1	2
5	3	5	-3*	H,K=		2,	0	11	17	1	-1	3	11	1	1	3	9	1	4
H,K=		0,	8	2	65	3	-2	H,K=		3,	2	6	6	1	1				
1	5	6	4*	5	4	1	0	1	23	1	1	H,K=		4,	5				
H,K=		1,	0	8	54	3	-1	4	78	4	-1	2	3	5	-3*				

0 0 0 0 4 5 0 0 4 0 8

LEGAL NOTICE

This report was prepared as an account of work sponsored by the United States Government. Neither the United States nor the United States Energy Research and Development Administration, nor any of their employees, nor any of their contractors, subcontractors, or their employees, makes any warranty, express or implied, or assumes any legal liability or responsibility for the accuracy, completeness or usefulness of any information, apparatus, product or process disclosed, or represents that its use would not infringe privately owned rights.

TECHNICAL INFORMATION DIVISION
LAWRENCE BERKELEY LABORATORY
UNIVERSITY OF CALIFORNIA
BERKELEY, CALIFORNIA 94720