Lawrence Berkeley National Laboratory

Recent Work

Title

The magnet cryostats and the cryogenic system for multiple bore superconducting quadrupoles inside of an induction Linac

Permalink

https://escholarship.org/uc/item/5v1620dz

Author

Green, Michael A.

Publication Date

2000-06-05

eScholarship.org Powered by the California Digital Library
University of California

LBNL-46035
SCMAG-718

The Magnet Cryostats and the Cryogenic System for Multiple Bore Superconducting Quadrupoles Inside of an Induction Linac

Michael A. Green
Lawrence Berkeley National Laboratory
Berkeley CA 94720

Introduction

An induction linac is proposed to accelerate multiple high intensity heavy ion beams for the heavy ion fusion project. Quadrupoles are used to focus the high current beams as they are being accelerated. Since space is at a premium within an induction linac, multiple superconducting quadrupoles arranged in an array have been proposed to focus the multiple beams. The proposed superconducting quadrupoles have a design gradient of 50 to 100 T per meter depending for warm bore beam aperture. We have looked at warm bore apertures of 60 to 120 mm within the quadrupole array. Most of the quadrupole designs that have been discussed have a peak induction of 4 T at the pole, at the inside boundary of the superconducting coil. The peak induction within the coils, which affects the superconductor, is somewhat larger than 4 T. For most of the studies to date, the superconducting coils are made from niobium-titanium operating at 4.4 K.

The design of a multiple bore quadrupole cryostat is governed by the induction linac that will be built around the quadrupole array. The design of the quadrupole cryostat is governed by the following factors: 1) The radial distance from the outermost quadrupole bore tube to the outer wall of the cryostat should be minimized. This space contains the support structure for the quadrupole, an iron flux return (if there is one), a magnetic shield (if one is needed), the evacuated multiple layer insulation and shield for the cryostat, and the vacuum vessel wall. 2) The cryostat vacuum shell should be a circular cylinder, so that the electric field generated by the induction linac cell is not altered. The region of the cryostat where cryogenic supports and cryogenic services are located does not have to have a circular outer boundary. 3) The longitudinal space allowed for cryogenic service, cold mass supports, and leads should be minimized. The value of this longitudinal space depends on a number of factors that include the length of the quadrupoles and the spacing between quadrupoles. 4) The radial space between the superconducting quadrupole coils and the beam vacuum chamber should be minimized. 5) The number of beams in the quadrupole array should be maximized so that more beam current can be accelerated for a given size induction linac.

Superconducting Coil Design and Its Effect on the Cryostat

The design of the cryostat for the multiple beam quadrupoles is affected by the magnet design used. The quadrupole designs fall into two general categories; quadrupoles that a separated so than one-quadrupole affects is neighbor minimally and closely coupled quadrupoles where the flux from one quadrupole flows directly into its neighbor. The two categories have different array densities. Figure 1 on the next page shows that a closely coupled array of sixteen quadrupoles can be made to fit in the space of nine relatively uncoupled quadrupoles. For a given total beam current, the closely coupled arrays appear to take up less radial space within the induction linac.

-

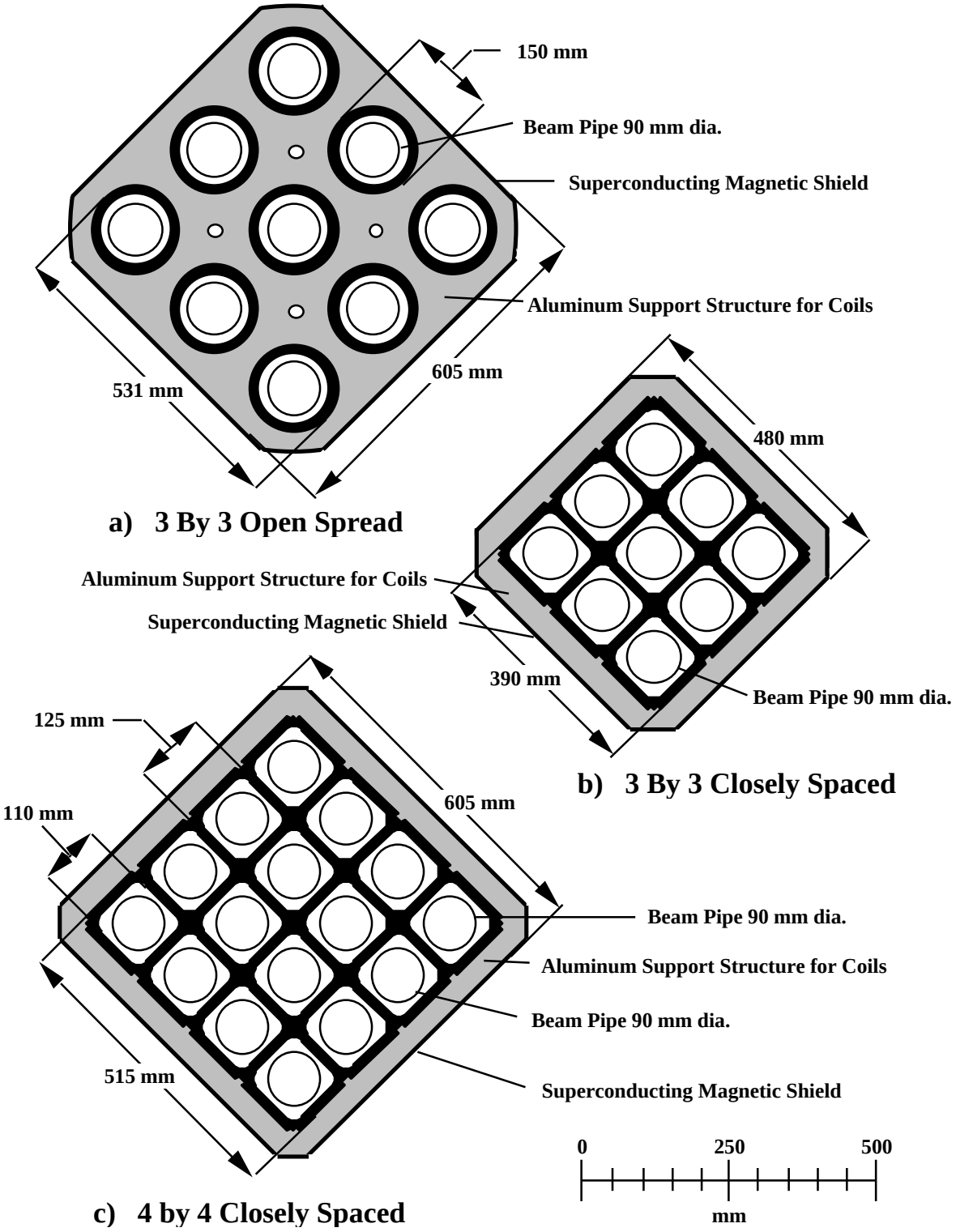

Figure 1. A Comparison of Loosely and Closely Packed Quadrupole Arrays

-

Figure 1 on the previous page shows two types of quadrupoles. The first is spaced cosine two theta or intersecting ellipse type of quadrupole. The second is a square type of quadrupole that can be closely packed with other quadrupoles of the same type. Three by three and a four by four arrays of square quadrupoles are illustrated in Figure 1. The tightly packed three by three square array should be compared to the loosely packed array of cosine two theta quadrupoles.

The cosine theta and intersecting ellipse types of quadrupoles are similar to many that have been built over many years for accelerator applications. Both the cosine theta and the intersecting ellipse (layer wound) quadrupoles can be fit into a cylindrical space. The cosine theta type of quadrupole can be surrounded with unsaturated iron without changing the multi-pole structure of the field[1]. The intersecting ellipse quadrupole does not share this feature. Figure 2 below shows the simplest form of the cosine two theta type of quadrupole. There are four current blocks that each use 60 degrees of angle in the volume between the outer coil radius and the inner coil radius. A 30-degree spacer is put between the coils. This coil angle eliminates the N=6 (twelve pole) multi-pole in a symmetric quadrupole. The next multi-pole to appear in the field is the N=10 (twenty pole) term. Iron can be put around the coil shown in Figure 2 to shield it from its neighbors with minimal changes in the field structure. Field coupling between the circular quadrupoles in an array can be eliminated by iron or by distance between the individual quadrupoles. A quadrupole array without field coupling can either be all focusing or all defocusing.

The quadrupole shown in Figure 2 has ends that are bent over the tube that forms the inner coil radius. The ends must be segmented to eliminate the N=6 term in the integrated field along the axis of the quadrupole. Because the inner boundary of the quadrupole coil is circular, the minimum radial spacing between the warm bore and the coil was set to be 15 mm. A variation of this type of quadrupole has been proposed by R. Meinekie[2].

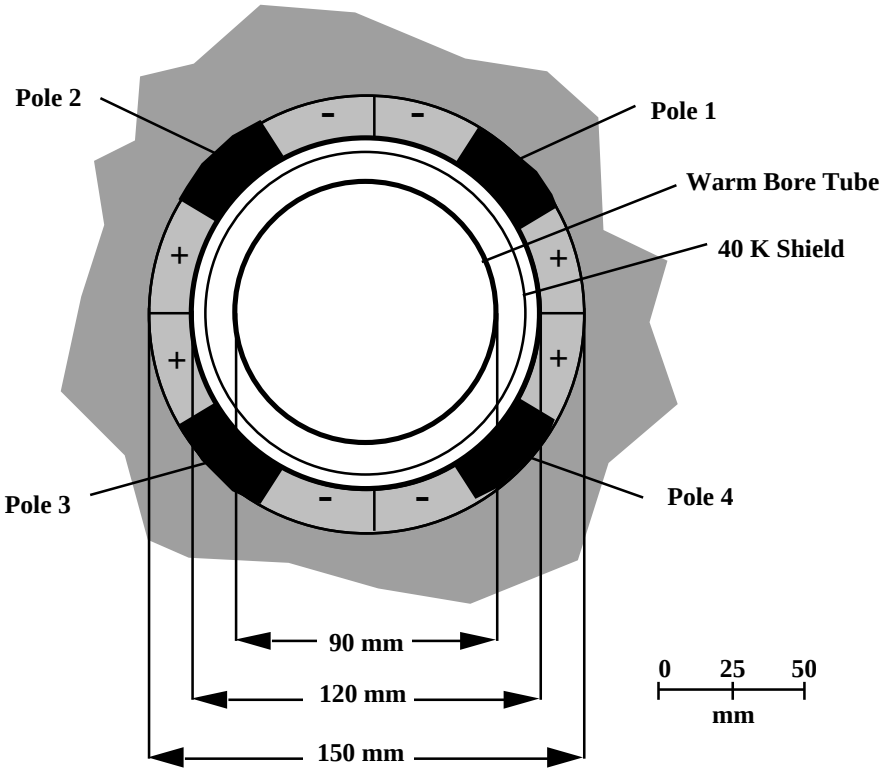

Figure 2. A Circular 60 Degree Coil Quadrupole with Iron or Aluminum over the Coils

-

The square cross-section quadrupoles shown in the lower part of Figure 1 can be built in two ways[3]. These two ways are shown in Figure 3 below. The first is a variation of the Panofski type of quadrupole that has current sheets of alternating sign around the sides of the square. This type of quadrupole produces a perfect quadrupole field, but it has bent over ends between one side of the square and the other. The second variation is the diamond shaped quadrupole that has all four coils wound in the plane of the diamond side[4]. This type of coil has no end that bends over the corner of the diamond. The second type of square quadrupole should be easier to wind and assemble.

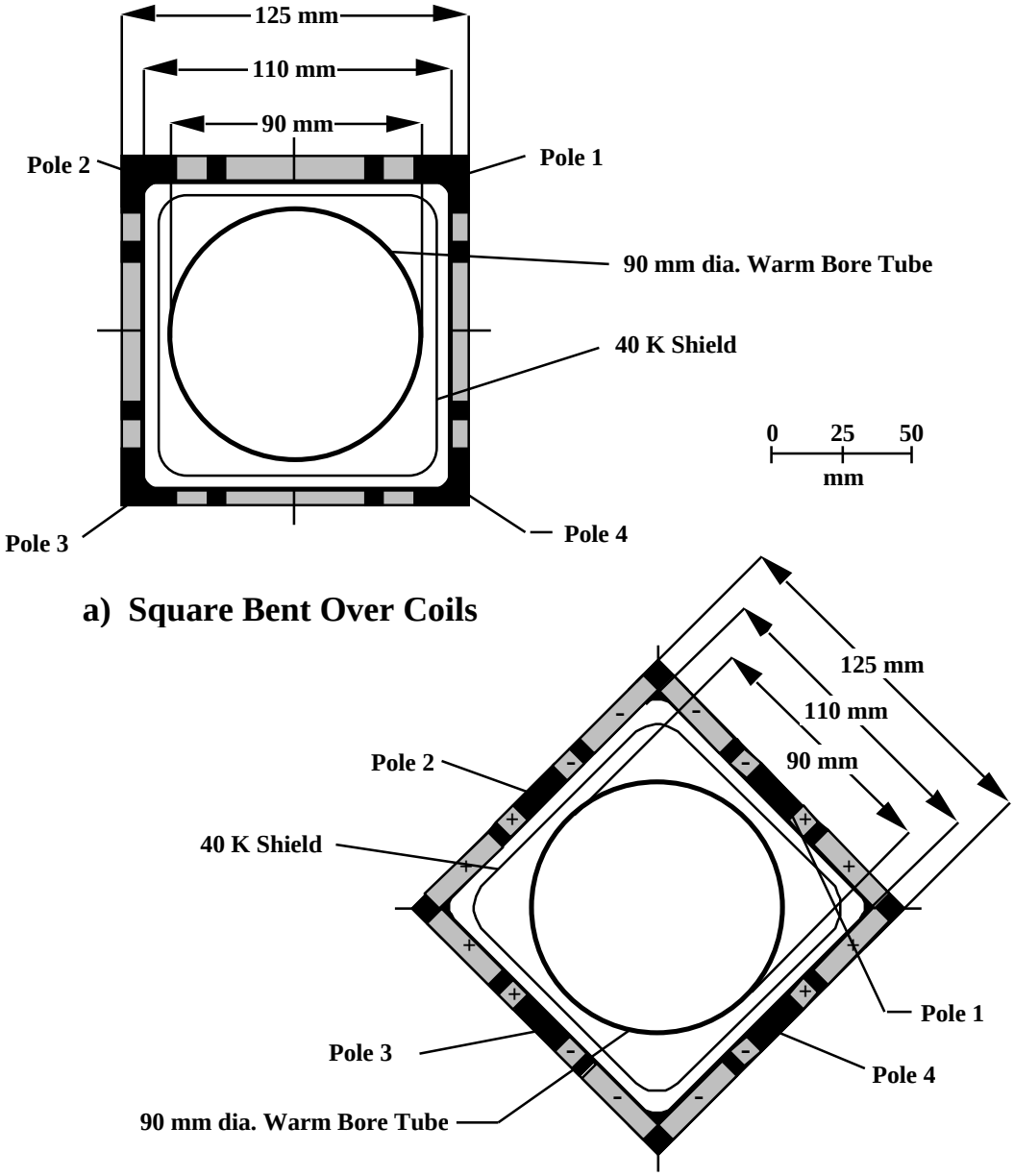

Figure 3. Two Configurations of Square Coil Quadrupoles

-

The two types of square coils shown in Figure 3 can be closely coupled both physically and magnetically. Physically the flat surfaces would lie against one another. The coils can be clamped together using a welded aluminum collar system. The welded aluminum collar will shrink over the superconducting coil packages as the magnet is cooled to 4 K, clamping them tightly to keep training to a minimum. The aluminum will carry the magnetic forces due to the field in the magnet bores. Nesting the square coils shown in the upper part of Figure 3 allows one to have quadrupoles of all the same type (all focusing or all defocusing) in the array. Nesting the diamond shaped coils shown in the lower part of Figure 3 will result in focusing and defocusing quadrupoles in the same array. Having quadrupoles of different types may complicate the machine lattice. Figure 4 illustrates how the quadrupoles might be nested in the diamond pattern.

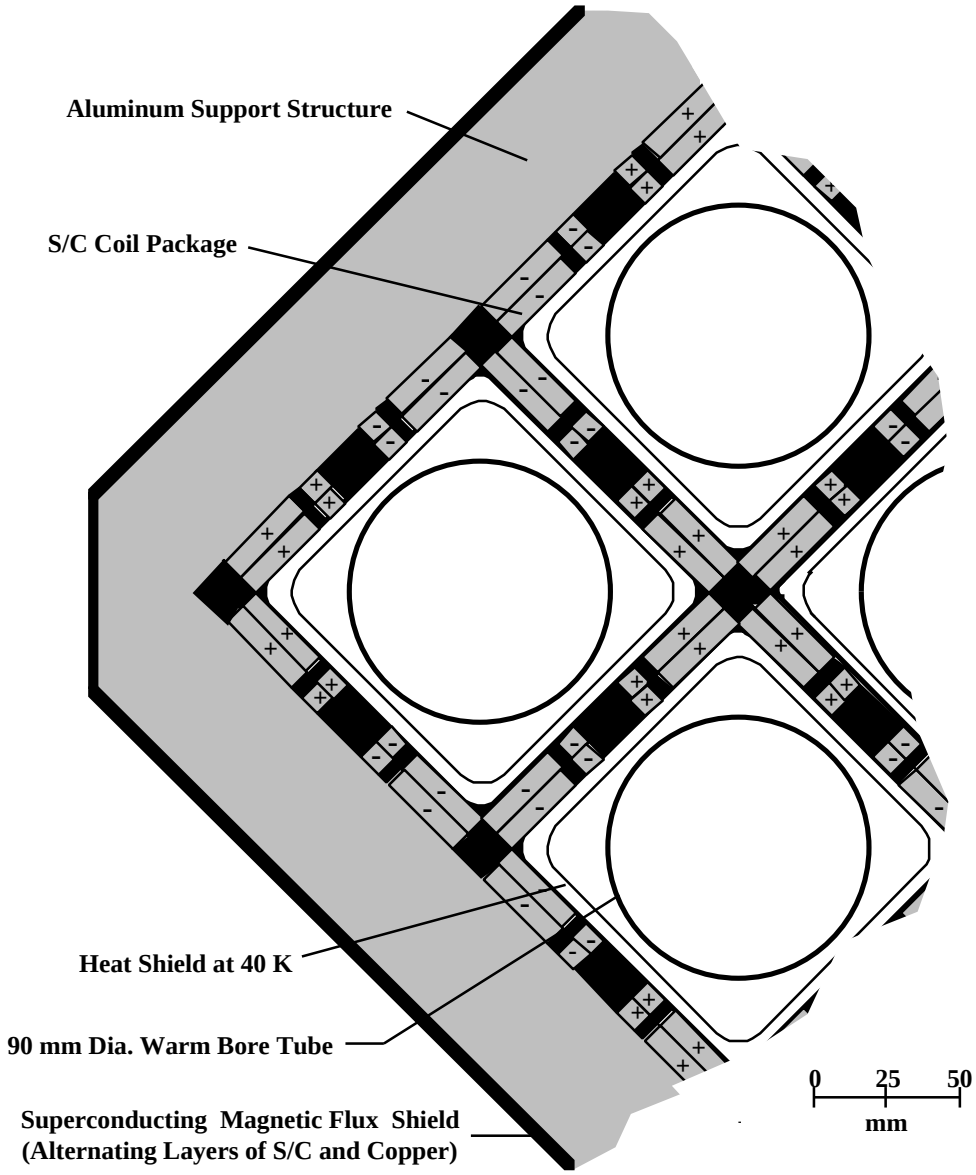

Figure 4. Part of an Array of Nested Diamond Shaped Quadrupoles

-

Figure 4 on the previous page shows what a nested array of diamond shaped quadrupoles might look like. Each quadrupole has four flat coils. The spacers shown in black allow one to generate a quadrupole field with the desired multi-pole structure. Each quadrupole consists of four coils attached to the surfaces of a diamond shaped stainless steel tube. Since a quadrupole shares the coils of the adjacent quadrupole, the coils only have to be half as thick as a stand-alone quadrupole of the same gradient. Figure 4 shows four quadrupole bores. The up and down quadrupoles are of one type (say focusing) while the left and right quadrupoles are of the opposite type (say defocusing). The coils on the four sides of the quadrupole are identical to each other. The position of the coil spacers is set so that the desired multi-poles are minimized. Symmetry eliminates or minimizes the N=1, N=3, N=5, N=7, N=8, N=9, N=11 and so on of the normal terms and all of the skew terms. The position of the spacers in each of the coils minimizes N=6, N=10, and N=14. Each set of quadrupole coils can stand alone, and they produce an induction of 2 T at the pole. When combined with the coils in the other quadrupoles of the array, the pole induction at the coil is increased to about 4 T. Since the outsides of the array do not have double coils, an extra coil must be provided to bring the pole induction up to 4 T.

Figure 4 shows a two dimensional quadrupole structure. There is also a structure in the ends of the quadrupole coils. Spacers in the ends allow one to minimize the N=6 and N=10 terms in the integrated field from minus infinity to plus infinity. This technique works for magnets designed for accelerators as long as the betatron wavelength for the accelerated beam is long compared to the physical ends of the quadrupole. A quadrupole that is 600 mm long and has a warm bore of 90 mm will have a magnetic length of about 500-mm. The cryostat studies presented in this report are for quadrupoles with a magnetic length of 500 mm and a cold length of 600 mm. The overall room temperature length of the cryostat is assumed to 700 mm.

The quadrupole arrays shown in Figures 1 and 4 have a superconducting shield on the outside of the cold mass of the quadrupole. A superconducting shield is one possible solution for eliminating stray field from the quadrupole array. Superconducting shields made with 30 layer of Nb-Ti alternated with 31 layers of pure copper can effectively shield an induction of up to 1.5 T. Two layers of the Nb-Ti and copper shield material can shield about 2.3 T. The pure copper acts as a stabilizer for the sheet of Nb-Ti and it keeps the superconductor from flux jumping while the magnet is being charged. Given the nature of induction linac, it is not clear that the superconducting shield is needed. The use of a superconducting shield permits one to completely de-couple the quadrupoles from the induction linac and from each other[5,6]. The superconducting shield must be considered in the quadrupole magnetic field calculations when designing the coils for the quadrupole array.

General Comments about the Quadrupole Array Cryostat

The cryostat for a multiple channel quadrupole array must fit inside the cells of an induction linac. To the extent that the quadrupole array cryostat intrudes into the space that could be used for accelerator structure determines the overall average accelerator efficiency. The radial space occupied by the quadrupole array strongly affects the cost of the induction linac structure. As a result, the cryostat around the quadrupole array has the following characteristics:

- The length of the cryostat compared to the magnetic length of the quadrupole should be minimized. The magnetic length of the quadrupole compared to the physical length of the cold mass depends on how the quadrupole ends are shaped to produce a good quality integrated quadrupole field. Magnet coil support plates lie beyond the physical ends of the quadrupole coils. In the 90-mm bore quadrupole cases studied, the physical length of the quadrupole cold mass is 600 mm for a quadrupole that has a magnetic length of 500 to 520 mm. Increasing the quadrupole bore diameter decreases the magnetic length with respect to the physical length of the cold mass. Distance from

-

the outside of the quadrupole cryostat end plate to the end of the cold mass was arbitrarily set at 50 mm. The cryostat end plate itself takes up 12.7 mm of the 50 mm. The rest of the space is taken up by multi-layer insulation and a 1-mm thick copper shield cooled to about 40 K. One can potentially reduce the thickness of the multi-layer insulation, but it is doubtful that the total space between the end of the cold mass to the outside of the vacuum chamber wall can be reduced by more than 15 mm.

- The diameter of the cryostat vacuum vessel around the coil package should be minimized. In the cases presented in this report, the outside diameter of the cryostat vacuum vessel was arbitrarily set at 50 mm larger than the largest diagonal dimension of the magnet cold mass. To shorten the largest diagonal dimension of the magnet cold mass, the corners are cut off as shown in Figure 1. This 50-mm space between the outside world and the cold mass includes the cryostat vacuum vessel wall, the multi-layer insulation system and a helium gas-cooled 40 K shield. The 4.4 K two-phase helium pipe on the outside of the magnet cold mass and the 40 K helium pipe on the outside of the shield must intrude into the space between the outer vacuum shell wall and the cold mass. Further engineering may permit one to reduce the radial space between the cold mass and the cylindrical cryostat wall.

- The cold mass supports, cryogenic services, and magnet electrical leads are supplied to the quadrupole array cryostat at the center of the cryostat. The thickness of the region where cold mass supports and services are brought into the cryostat should be minimized so that the space between the induction linac cells can be minimized. The length of this intrusion is the issue not the extent of the radial and angular space occupied by cryostat services and cold mass supports. In general, a longitudinal space of 100 to 120 mm is needed for the cold mass supports, the cryostat cryogenic services and the magnet electrical leads between 4 K and room temperature. The studies presented in this report assume that the quadrupole array is cooled using a central helium refrigeration system that provides two-phase helium at 4.4 K and gaseous helium for the shields and leads at 40 K. If a cryocooler is used to cool the quadrupole array, the longitudinal space required for the cryocooler may be a little longer.

- The electrical leads and the cryogenic services are assumed to come into the cryostat from the top. These services could be brought in from the side or they could be brought in at a 45-degree angle from the up down line of the cryostat. The orientation of the cryogenic services with respect to the up down line is arbitrary, so the orientation that is best from an overall perspective is the best one to use for the magnet. The orientation of the leads and cryogenic services is shown in Figure 5, 6, and later in this report.

- The leads between 4.4 K and 40 K are assumed to made from high Tc superconductor (HTS). The use of HTS leads in this temperature range permits one to reduce the heat leak into the 4 K region of the magnet cryostat. A pair of 1000 A HTS leads will allow about 0.4 W of heat to leak into the 4 K region from 40 K. The heat leak down the HTS leads is proportional to the lead current and the temperature difference between the shield and the 4 K region. The design presented in this report assumes that the quadrupoles in the array are powered in series through a single set of leads. From 40 K to room temperature, gas cooled leads are used, unless the magnet is operated on a cryocooler. The gas used to cool the leads between 40 K and room temperature is assumed to come from a point in the refrigerator that is at 40 K. The helium gas cooled shield and the gas cooled electrical leads can be operated from the same flow circuit. When the magnet is cooled with a cryocooler, the leads would be made from solid copper and the heat down the upper leads goes to the first stage of a two-

-

stage cryocooler. When a quadrupole array is cooled using a cryocooler, the magnet current should be less than 550 A. The refrigeration required to cool the electrical leads is an argument in favor of low current quadrupoles in the array, but it is not a strong one. Quadrupole arrays that must operate at high current can be hooked in series with other quadrupole arrays using superconducting bus bars. The trade off between lead current and refrigeration is not dealt with further in this report, but it is worth noting that this is an issue between the magnet designer and the cryogenics engineer.

The quadrupoles are arranged in either a square or a diamond shaped array. The support material around the quadrupole array, whether it be iron or aluminum, is assumed to have a square or diamond shape. This shape goes into a circular cryostat vacuum vessel that fits tightly at the corners of the square or diamond. The space between the flat face of the square or diamond and the round cryostat vacuum vessel can be used for longitudinal cold mass supports, cold mass support attachment points, cold diodes and resistors to protect the quadrupoles in the array during a quench, and two phase helium cooling pipes. If this space is used effectively, the longitudinal space for the current leads, the cold mass supports and the cryogenic helium distribution system can be minimized.

The diamond shaped coil arrays shown in Figure 1 were assumed when the cryostat studies were done. The cryostat is somewhat different when a square quadrupole array is used. The diameter of the vacuum vessel around the diamond and the square quadrupole arrays is the same for a given number of quadrupoles in the array and a given quadrupole size. There is a change in the height of the center portion of the cryostat for the two cases, but the cylindrical region that is inside of the induction linac cells has the same diameter. An example of a square quadrupole array will be shown in Figure 6 later in this report.

Quadrupole Array Cryostat Cold Mass Support System

The cold mass support system for the quadrupole array must be entirely within the cylindrical portion of the cryostat or the section of the cryostat in the center of the cryostat (in the longitudinal direction parallel to the axis of the quadrupoles) where leads and cryogenic services are located. The portion of the magnet that is surrounded by the induction linac must not have any parts that break the symmetry of the cylindrical surface or the flat end plate. It is desirable, that the cold mass support system be self-centering. This means that the position of the physical center of the quadrupole array should not change (within 0.1 mm) as the magnet cools down. If the support system is not self-centering, the change in the magnetic centers of the quadrupoles it should be known and repeatable from one cool down to the next. The heat leak into the 4 K region from the cold mass intercept should be less than 0.25 W when the cold mass intercept is at a temperature of 40 K

The cryostat cold mass support system must support the following forces: 1) shipping and earthquake forces of three times gravity in the vertical, longitudinal and transverse directions, 2) any forces that are imposed upon the magnet due to nearby magnets, and 3) forces imposed upon the cold mass due to differential thermal contraction.

Two types of cold mass support systems for the quadrupole arrays were studied. Both are presented in this section of the report. The first support system consists of a pair of vertical oriented carbon or alumina fiber support tubes that carry longitudinal and transverse forces by elastic tube bending. The vertical forces are carried in tension and compression. The second support system is a self-centering support system that uses tension bands to carry the forces in the transverse and vertical directions. Forces in the longitudinal direction are carried by a pair of composite push-pull rods made from oriented fiber and resin. The fiber is the tension bands and the push-pull rods can be either glass or carbon[7].

-

Vertical Support Tube System

An example of the vertical support tube cold-mass support system is shown in Figure 5 below. The support system shown assumes a diamond shaped array of sixteen quadrupoles with 9-mm warm bores. Figure 6 on the next page shows the same support system for a square array of sixteen quadrupoles.

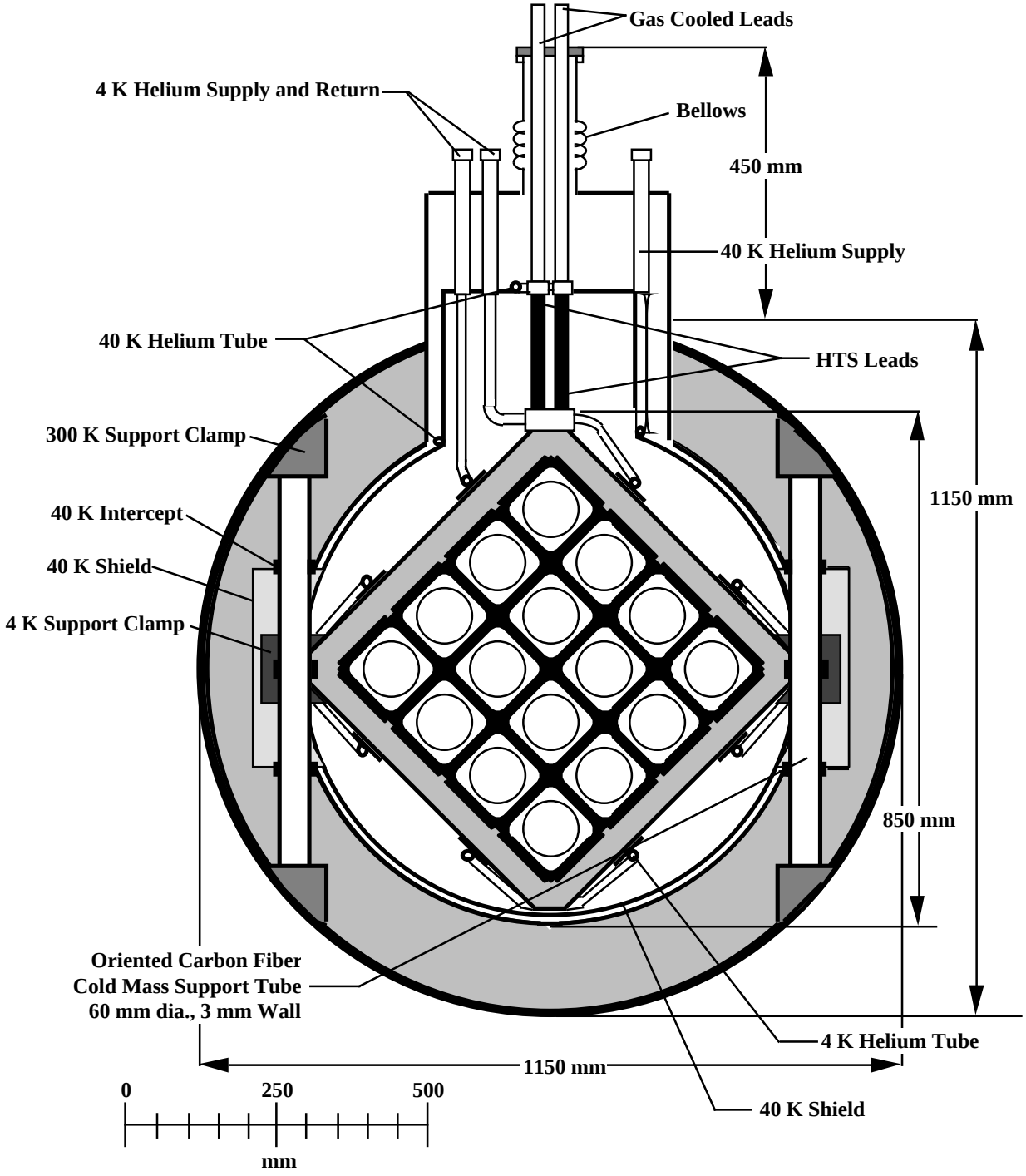

Figure 5. A Cross-section View of the Quadrupole Array Cryostat with a Pair of Oriented Carbon-Fiber Support Tube Cold Mass Supports (The quadrupole array is diamond Shaped.)

-

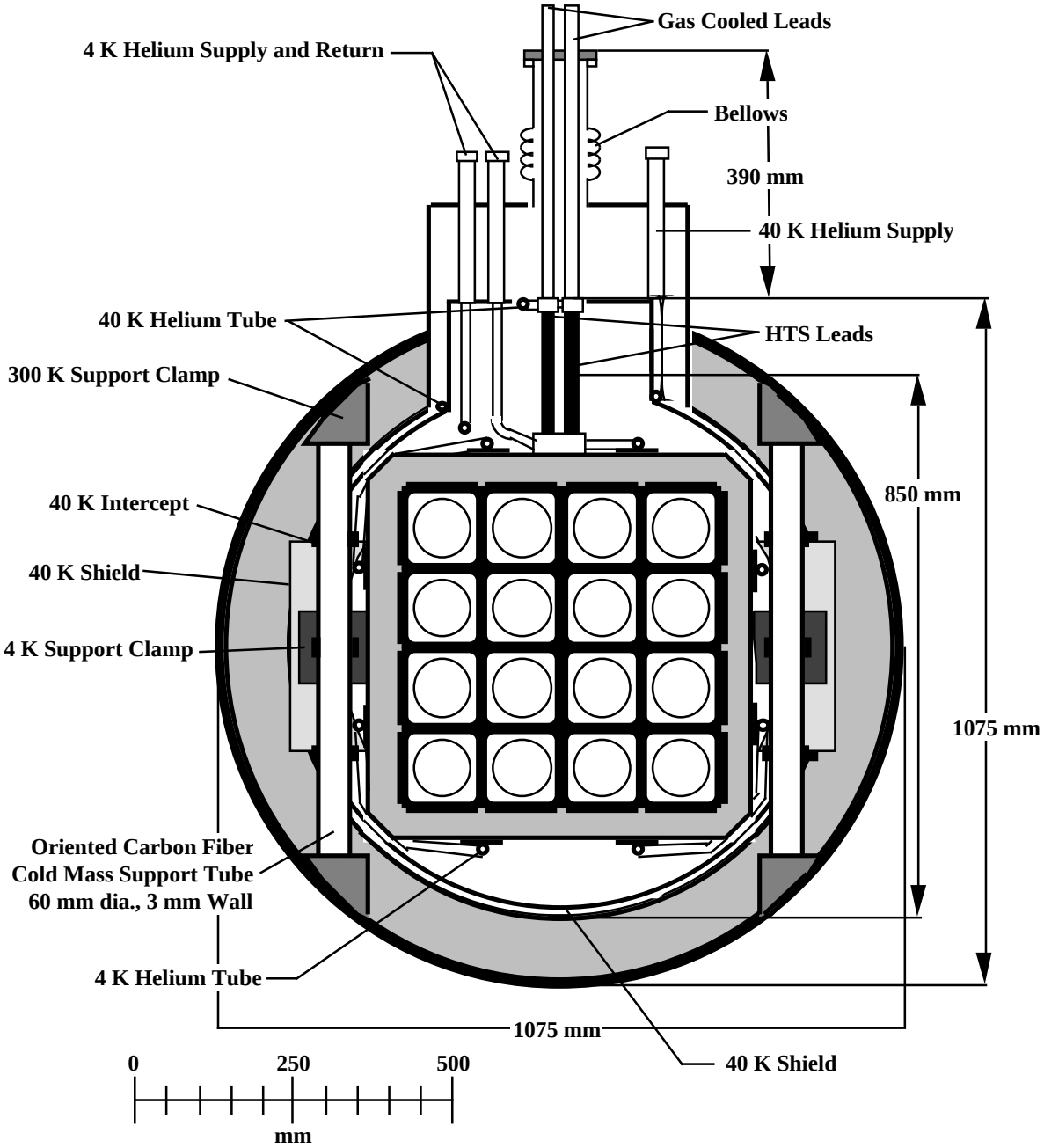

Figure 6. A Cross-section View of the Quadrupole Array Cryostat with a Pair of Oriented Carbon-Fiber Support Tube Cold Mass Supports (The quadrupole array is square Shaped.)

The vertical support tube support system shown above has a square shaped quadrupole array within the cryostat. The 850-mm diameter of the cryostat vacuum vessel around the magnet coil package is the same as for the previous diamond shape array shown in Figure 5. The difference between the cases in Figures 5 and 6 is overall height of the neck that contains the electrical leads and the cryogen supply system. The square array support tubes are closer to the physical center of the magnet. As a result, the support ring on the outside of the cryostat is smaller (1075 mm versus 1150 mm for the diamond array).

-

The heat leak down the support rods into the quadrupole array cryostat can be calculated using the following expression:

$$Q = G\, A_c /L = [4G\pi Dt]/L \qquad -1-$$

where Q is the heat leak from temperature T_2 to T_1; G is the support rod thermal conductivity integral between temperature T_2 and T_1; A_c is the cross-sectional area of the support rod; D is the diameter of the support rod, t is the thickness of the support rod cylinder and L_c is the length of the support rod between temperatures T_2 and T_1. For our case T_1 = 4.4 K, T_2 = 40 K, G = 6 W m^{-1}(for oriented carbon fiber epoxy composite) $A_c = 2.4x10^{-3}$ m^2 (for four cross-sections), D = 0.06 m t = 0.00318 m and L_1 = 0.12 m. Using Equation 1 above one calculates a conduction heat leak into the cold mass Q_1 = 0.12 W into the cold mass through the pair of support rods. If the intercept temperature is increased to 77 K, the value of G goes up to 18 W m^{-1} and Q_1 goes up to 0.36 W. Heat leak from 300 K to 40 K can be calculated using, G = 174 W m^{-1} D = 0.06 m, t = 0.00318 m and L_2 = 0.15 m. The heat leak Q_2 = 2.78 W, which is picked up by the shield cooling gas.

The stress in the rod against up-down force (in the direction of the rods) can be calculated using the following expression:

$$\sigma_1 = F / A_c = F/[2\pi Dt] \qquad -2-$$

where σ_1 is the tensile or compressive stress in the rod; F is the maximum design up-down force in the rod and A_c D and t are previously defined. The equation above applies when the length of the rod is below the critical length for buckling when the rod is in compression. For a rod length of 0.3 m and a rod radius of gyration of 0.03 m, the rod has a length that is less than the critical length for buckling. In our case, the worst stress occurs s when one end of the rod is disconnected so that $A_c = 1.2x10^{-3}$ m^2. For a maximum design force F of 14000 N (4 g acceleration on a maximum mass of 350 kg), the maximum up-down stress along the axis of the rod σ = 11.7 MPa (1700 psi). This is quite low.

The worst stresses in the rod will occur when longitudinal and cross-wise force put the support rods into bending. The support rods can be considered to be simple beams with simply supported ends for this stress analysis. For the support rods in bending, the stress in the rod can be calculated using the following expression[9,10]:

$$\sigma_2 = [F\, L_R\, D]/4\, I = [F\, L_R]/[\pi D^2 t] \qquad -3-$$

where σ_2 is the stress in the rod with a longitudinal or cross-wise force F; I is the moment of inertia of the hollow cylindrical rod; L_R is the total length of the rod; and D and t have been previously defined. For a force F = 14000 N, L_R = 0.6 m, D = 0.06 m, and the thickness t = 0.00318 m, the maximum bending stress in the rod σ_2 = 233.6 MPa (34000 psi).

The rod deflection in the direction of the rod y_1 and the deflection cross-wise y_2 to the rod can be given by the following expressions:

$$y_1 = \sigma_1\, L/2E = F\, L_R/[2\pi EDt] \qquad -4-$$

and

$$y_2 = F\, L^3/[96\, EI] = F/[24\pi Et]\, [L_R /D]^3 \qquad -5-$$

-

where E is the effective elastic modulus of the material in the rod and F, L_R, D, and t have been previously defined. For a force of 14000 N on the rods with a rod material with an effective elastic modulus (in the direction of the fiber) of 50 GPa L = 0.6 m, D = 0.06 m and t = 0.00318 m, the deflection along the rod y_1 = 0.14 mm, and the deflection cross-wise to the rod y_2 = 1.17 mm.

The spring constant k of the support rod in any direction is simply the force in that direction divided by the deflection in that direction. The spring constants may be calculated using the following expression that applied to the hollow support rod cases:

$$k = 2\pi EDt/L_R \qquad -6-$$

And

$$k = 24\pi Et\,[D/L_R]^3 \qquad -7-$$

where E, D, t, and L_R have all been previously defined. In our case, when E=50 GPa, D = 0.06 m, t = 0.00318m, and L_R = 0.6 m, the spring constant along the rod k_1 = 100 MN per meter (10.2 metric tons force per mm) and cross-wise spring constant k_2 = 12.0 MN per meter (1.22 metric tons force per mm).

A general expression for resonant frequency for the support system in the three principle directions can be calculated by using the following general expression:

$$f = 1/2\pi\,[k/m]^{0.5} \qquad -8-$$

For a suspended mass m of 350 kg, the resonant frequency is the direction of the rod is about 85 Hz. In the cross-wise direction the resonant frequency is about 29 Hz for a supported mass of 350 kg. The twisting motions probably have a lower resonant frequency. The support tube type of support system appears to be entirely adequate for supporting a quadrupole array. The major disadvantage of the support system shown in Figures 5 and 6 is the fact that the stresses in bending are much higher than the stresses due to longitudinal forces in the direction of the rod. This is the disadvantage of any support system that puts the cold mass support members in bending.

The last issue with the hollow rod support system is thermal contraction. If the rods are fabricated from carbon fiber, the thermal contraction along the rod is very small and is not a factor in the design of the support system. Thermal contraction of magnet is an issue. Since the coil package is mostly aluminum, the total contraction coefficient from 300 K to 4 K is about 0.0039. This means that the rods will have to be deflected about 1.46 mm as the magnet is cooled down. A deflection of 1.46 mm in the support rod will cause a peak stress in the rod of about 280 MPa (40700 psi).

Two choices for handling this deflection emerge; the first is pre-bend the rods so that there is no bow when the magnet is at 4 K. The second is to have a spring-loaded rod socket that permits a movement of 1.5 mm before the cold mass support rods start to bend. Additional engineering analysis is needed to determine the best solution that will allow the support system to flex a little as the cold mass is cooled to 4 K.

Figure 7 on the next page shows a cut away side view of the cryostat with the hollow support rod cold-mass support system. Figure 7 shows how the 4 K two-phase helium tube might be mounted on the sides of the coil package shown in Figure 5. Not shown in Figure 7 are the cold diodes and resistors that can be mounted on the flats of the diamond cross-section. The quench protection hardware for the magnet can be mounted at this location. The pad for the attachment of the support rod is also shown. This Figure and Figure 8 that follows on the page after next give one a good impression of the space that is needed for the magnet cryostat between the cells of an induction linac.

-

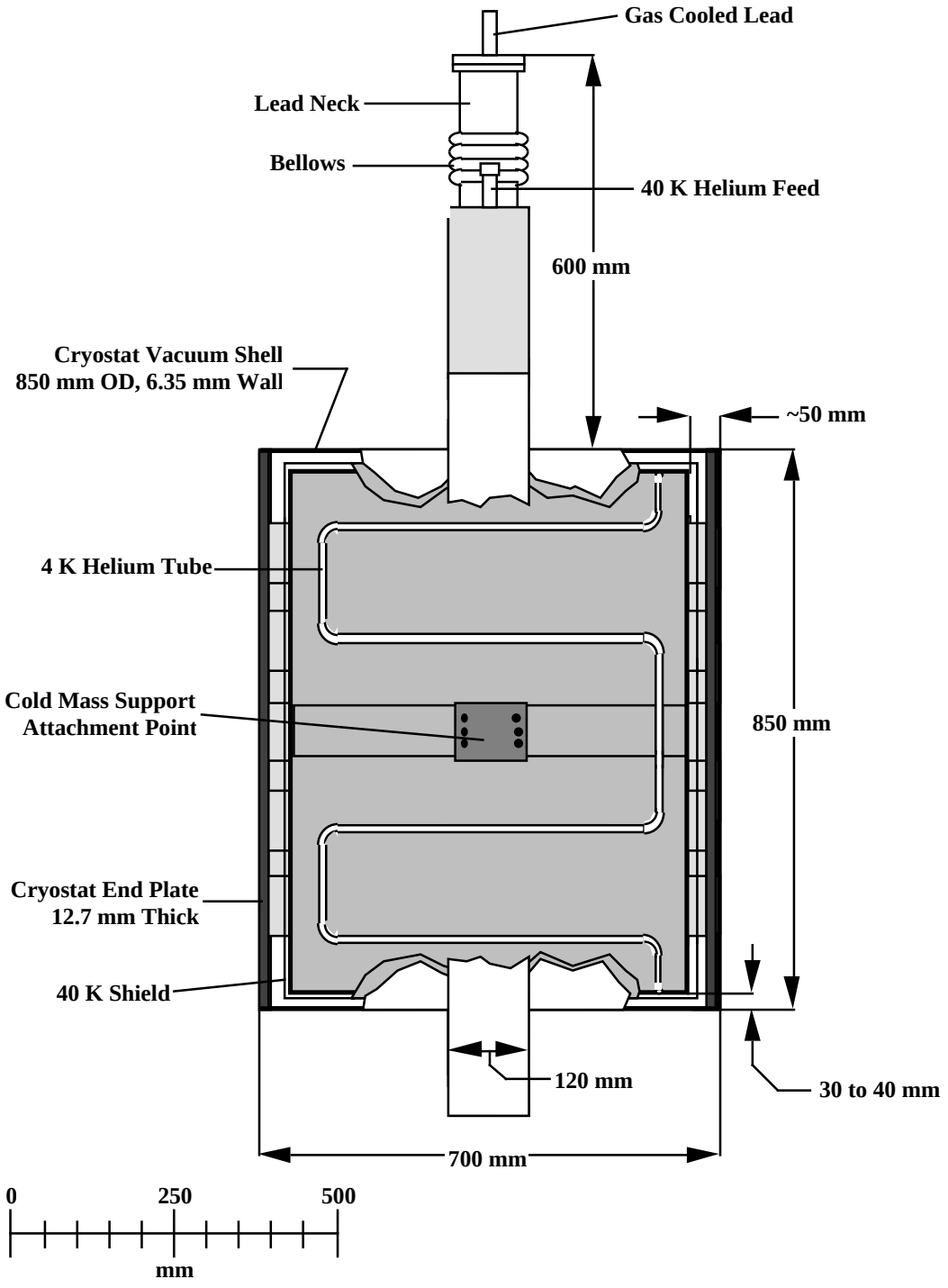

Figure 7. A Side View of the Cryostat with a Hollow Support Rod Cold Mass Support System

-

Figure 8 below shows the vertical cold mass support, the 40 K helium gas cooled shield and the end of the cold mass support structure that is shown in Figure 5. The 40 K helium gas coolant tube is shown mounted on the outside surface of the 40 K shield.

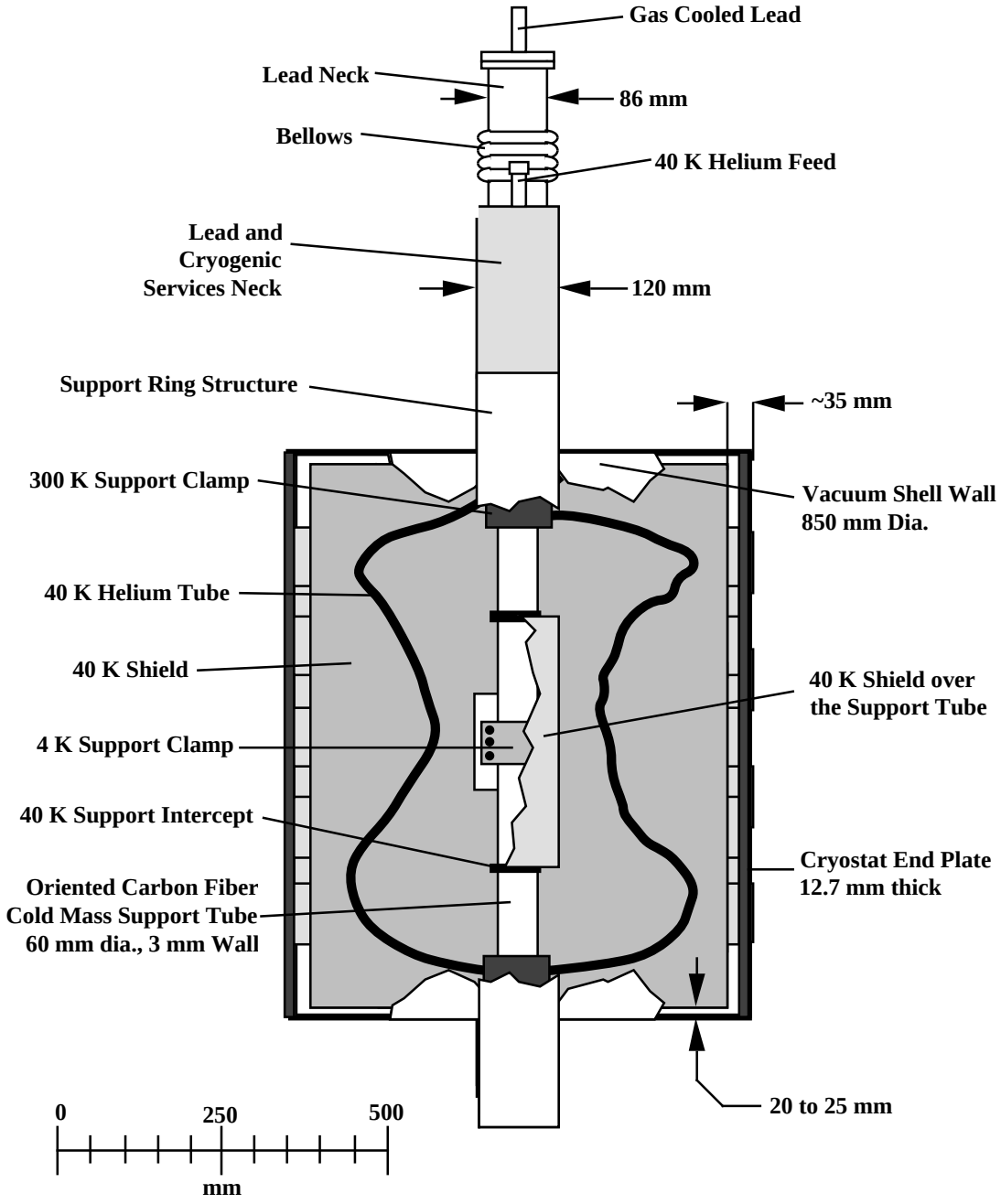

Figure 8. A Side View of the Cryostat with a Hollow Cold Mass Support System Shown at the Level of the 40 K Helium Gas Cooled Shield

-

Tension Band Support System

The second type of cold mass support system that was studied is a self-centering support system that uses support band[11,12]. The vertical and horizontal forces are carried by a system of support bands attached to the center of the flat faces of the diamonds. The system shown in Figure 9 below is a tension

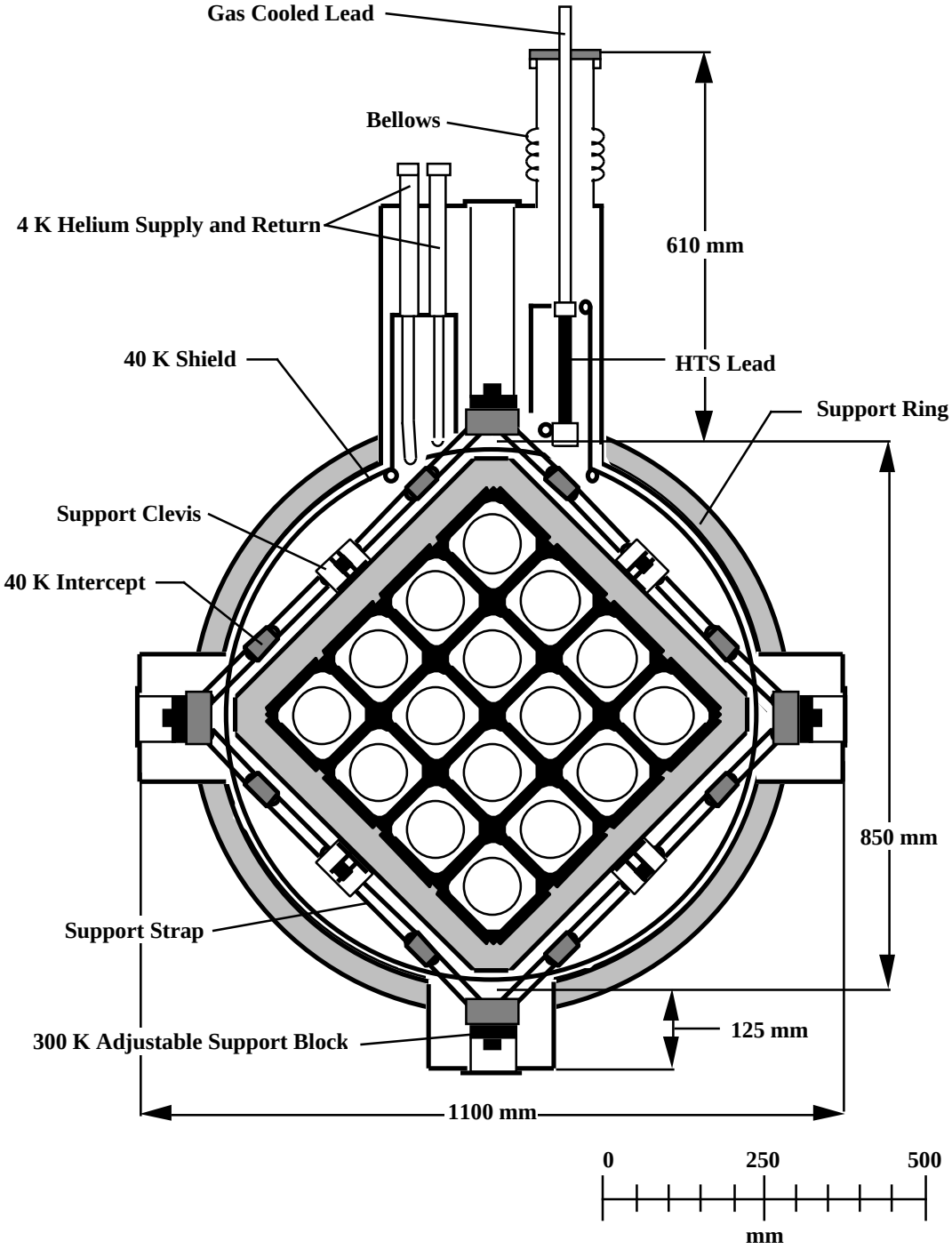

band system that can use oriented glass fiber or carbon fiber bands to carry the loads on the magnet.

-

Figure 9. A Cross-section View of a Quadrupole Array Supported by a System of Tension Bands

The tension band support system shown in Figure 9 is self-centering in the vertical and horizontal directions. A self-centering support system is one where the center of mass does not change its location as the cold mass is cooled to 4 K from 300 K. However, the physical center of each of the quadrupole bore move as the magnet is cooled down. The movement of the center of the quadrupole bore is about 0.004 times the distance of the center of quadrupole bore to the center of the cold mass. The center of the quadrupole will move toward the center of the cold mass. Thus the quadrupole center shown in Figure 9 that is farthest from the cold mass center will move about 1.12 mm toward the physical center of the cold mass. The quadrupole warm bore tubes must be positioned to take this motion into consideration. In the longitudinal direction, the tension band support system is not self-centering. The center of the cold mass is attached to the end of the cryostat can with a push-pull hollow support rod. This rod shrinks about 0.15 percent as one end is cooled from 300 K to 4 K. The magnetic center of the quadrupole will shift about 0.45 mm in the longitudinal direction. Figure 10 on the next page shows a cut away side view showing the location of the hollow longitudinal support rod. Figure 11 on the page following the next shows a side view of the cryostat vacuum vessel. The neck shown in Figure 11 is about 115 mm thick. Depending on how the gas cooled leads and cryogenic services are brought out of the magnet cryostat, the thickness of the cryostat neck could be reduced to about 90 mm.

The hollow rod support system, previously described, is almost self-centering because the cold mass is pinned along a line that passes through the cold mass center. The hollow cylindrical support rods flex along this line. In the longitudinal direction, the hollow rod support system previously described is self-centering. In both types of the cold mass support systems, the magnetic center of the quadrupoles in the array will change in a predictable way as the array is cooled from 300 K to 4 K. One should be able to predict the location of the magnetic center of each quadrupole to about 50 microns.

Figure 9 shows a tension band support system for a quadrupole with a diamond array. The tension control is exerted at angles of 0, 90, 180, and 270 degrees. If the quadrupole array were a square array, the tension control would be exerted at 45, 135, 215, and 315 degrees. The cryostat shown in Figure 9 shows the cryogenic services and leads coming into the cryostat at the top of the cryostat. The cryogenic support services and gas-cooled leads could enter the cryostat at an angle of 45 degrees off of vertical. In fact, if one wanted to, these services could be brought into to the cryostat from the bottom of the cryostat without affecting either the cryogenic supply system of the gas cooled electrical leads. The neck shown in Figure 9 is cramped. The service neck could be made wider to accommodate the lead and cryogenic services better. A wider neck could be thinner in the longitudinal direction. The tension band cold mass support system permits more options for the location of cryostat service ports than does the vertical hollow cylinder cold mass supports shown in Figures 5 and 6.

Equation 1 can be used to calculate the heat leak into the cryostat with a tension band support system. The support system consists of four tension bands and two push-pull cylinders with a cross-sectional area A_c that is dependent on the material in the bands. For a 350-kg mass and a maximum acceleration of that mass of 4 times gravity, the cross-sectional area of the support structures A_c is about $3x10^{-4}$ m^2 for carbon fiber supports with a G from 40 K to 4 K of 6 W m^{-1}. The length of the section from 40 K to 4 K, the heat flow into the cold mass through the cold mass supports Q = 0.015 W. For carbon fiber tension bands, the heat leak from 300 K to 40 K is about 0.36 W. If the tension bands are made from E glass instead of carbon fiber, the support cross-sectional area goes up a factor of 2.5 to $7.5x10^{-4}$ m^2 and the G goes up to 9 W m^{-1}. For E glass tension bands the 4 K heat leak Q = 0.056 W and the heat load from 300 K to 40 K is about 1.3 watts.

With a 24000 N load on the cold mass the stress in the bands due to the force should be about 201 MPa (29100 psi) when they are made from carbon fiber. For E glass tension straps, the stress in the straps would be about 81 MPa (11700 psi). The only other issue that comes into play is the deflection of the ring that carries the loads from the tension straps. For the ring shown in Figure 9, the ring deflection

-

is about 0.4 mm when tension has been applied. Ring deflection can be reduced by making the support ring thicker in the radial direction. The tension strap support system has a lower heat leak than the column support system. This is not very important, because the cold mass support leaks are not dominant in either case. Radiation heat leak through the insulation dominates the heat load from 300 K to 4K and the heat leak down the HTS current leads dominates from 40 K to 4 K.

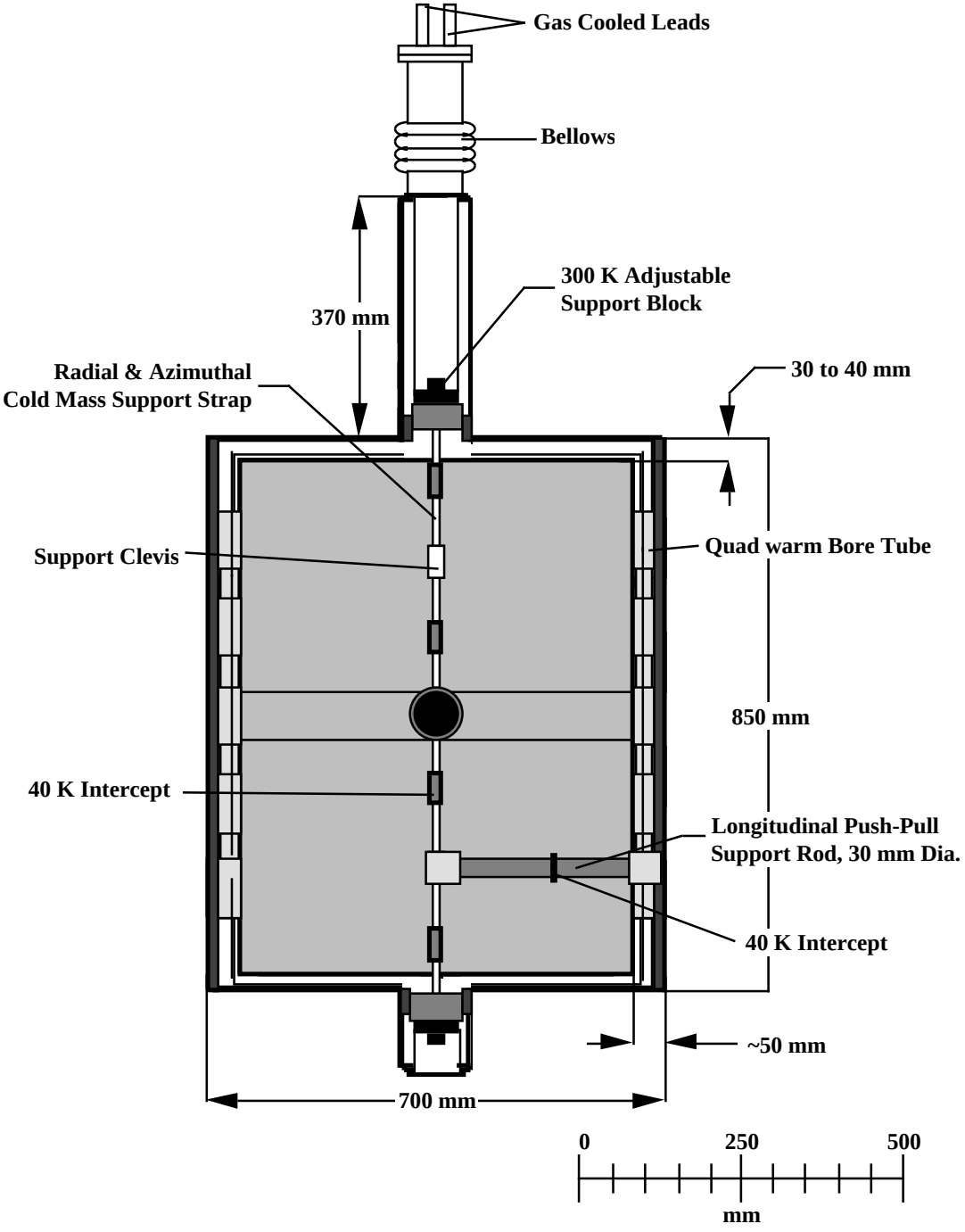

Figure 10. A Side View of the Tension Band Support System showing the Longitudinal Support

-

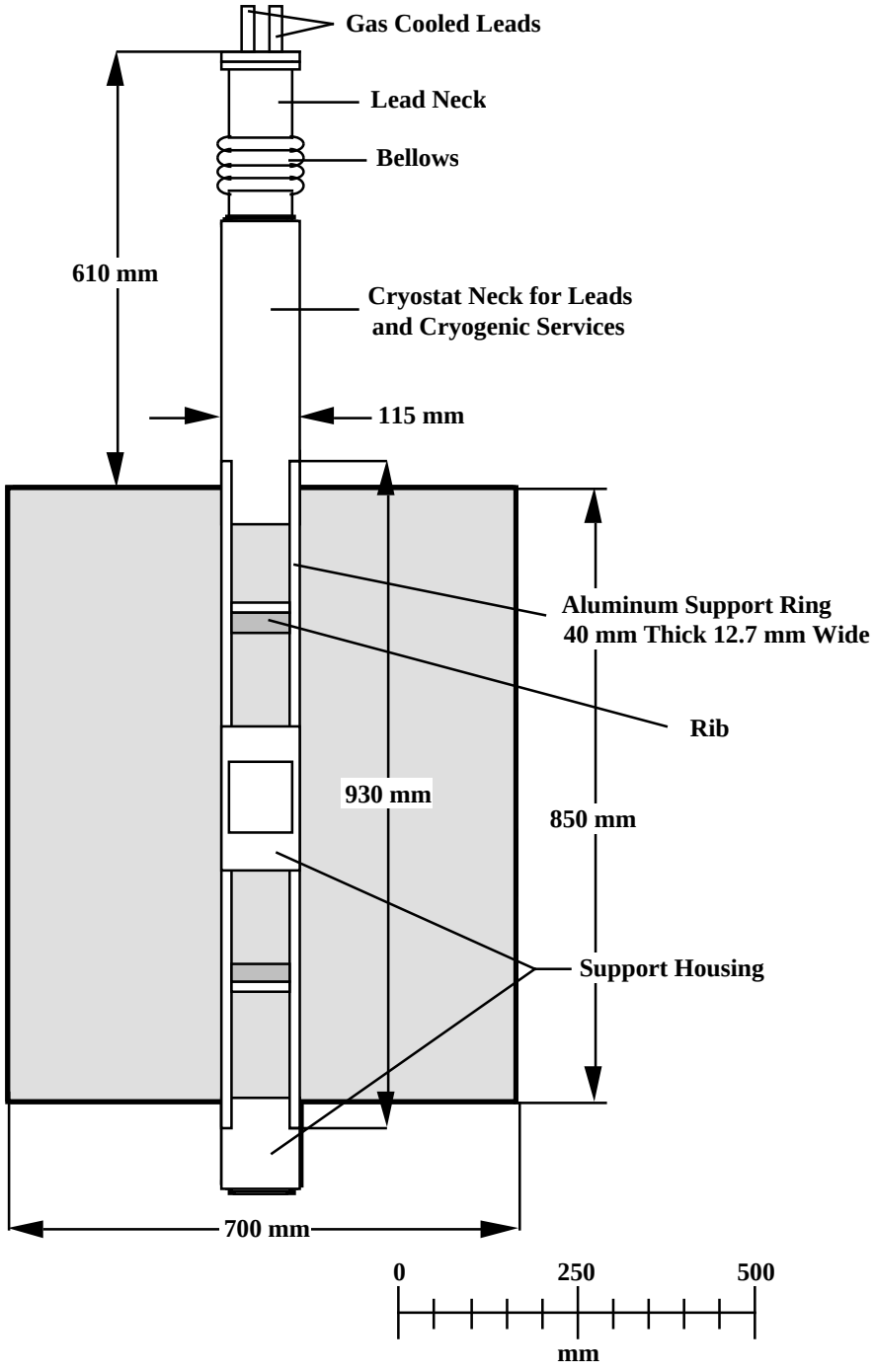

Figure 11. A side View of the Assembled Sixteen Quadrupole Array Cryostat

-

Heat Flow into the Quadrupole Array Cryostat

The heat leaks into the cryostat come from the following sources; 1) heat leaks down the cold mass supports, 2) heat leak by radiation and conduction through the multi-layer insulation, 3) heat leaks into the cryogenic circuit through the stainless steel bayonet connectors, 4) heat leaks down instrumentation wires, and 5) heat leaks through the magnet current leads. Since the magnet will have an intermediate temperature shield and thermal intercepts, most of the heat from room temperature will be deposited on the intermediate temperature shield. A shield and intercept temperature of 40 K was arbitrarily chosen for the quadrupole array. This temperature was chosen because it is a good upper end temperature for high Tc superconductor current leads (HTS leads) and gas at this temperature can be drawn off the refrigerator near the entrance to the second expansion engine[13]. Choosing an intercept and shield temperature at 40 K permits one to operate the magnet without liquid nitrogen and it provides for a low heat leak at 4.4 K. The use of HTS leads reduces the heat input into the 4 K region and it reduces the input power to the refrigerator used for lead cooling[14].

The heat leak into the cryostat is only part of the story. The refrigeration needed to produce the gas used to cool the shield, intercepts and leads should also be considered. If the same gas is used to cool the gas-cooled leads as is used to cool shield, the helium gas from the refrigerator will be heated by the shields and intercepts before it enters the gas cooled leads. There is an optimum temperature for the top of the HTS leads and the shield. For the cases studied, the optimum temperature for the top of the HTS lead appears to between 50 and 60 K, depending on the RMS lead current. (Lower lead currents have a higher optimum temperature for the top of the HTS leads.) When the shields and intercepts have an average temperature of about 40 K, the temperature of the top of 1000-ampere HTS leads is about 50 K. If the lead current is increased to 2000 A, the temperature at the top of the HTS leads is about 45 K when the average shield temperature is 40 K. A reduction of the lead current to 500 A, will increase the temperature of the top of the HTS lead to 57 K when the magnet shields have an average temperature of about 40 K. From the studies that have been done it appears that an average shield temperature of 40 to 45 K minimizes the refrigeration needed to cool the quadrupole array and its leads. The calculations done from here on assume that the average shield and intercept temperature will be 40 K, which results in a slightly lower than optimum HTS lead temperature.

The heat leak into the magnet cryostat due to heat flow down the cold-mass supports is proportional to the thermal conductivity integral for the cold-mass support material between 4.4 K and 40 K and the cross-sectional area of the cold mass support. The heat leak is inversely proportional to the length of the cold mass support between 4.4 K and 40 K. Equation 1 is an algebraic expression of the cold-mass support heat leak. The cross-sectional area of the cold-mass support is inversely proportional to the allowable stress in the cold-mass support while the magnet cold mass is subjected to its maximum design force (including thermal contraction forces). In some case, the spring constant and resonant frequency of the cold-mass support system may enter into determining the cold-mass support area.

Heat flow through the magnet insulation system consists of a radiation heat transfer term, a solid conduction heat transfer term and a free molecular gas conduction term[15]. Heat transfer through well-designed multi-layer insulation will be dominated by radiation heat transfer, provided the vacuum is good (better than 3×10^{-6} torr). An expression for heat transfer through a multi-layer insulation system is as follows:

$$Q = \Xi \, \varepsilon \, \sigma \, [T_2^4 - T_1^4] \, A_i / 2N \qquad \text{-9-}$$

where Q is the heat transfer through the insulation X is an error factor for hole in the insulation and other errors (for a good insulation system $\Xi = 1.3$); ε is the average emissivity of the sheets in the in multi-layer insulation stack (use $\varepsilon = 0.05$); σ is the Stefan-Boltzmann constant ($\sigma = 5.67 \times 10$ W m^{-2} K^{-4}); A_i is

-

the area of the insulation, and N is the number of sheets in the stack. T_2 is the highest temperature and T_1 is the lowest temperature. For typical a multi-layer insulation system with T_2 = 300K and T_1 = 40 K and N = 25, the heat flow per unit area Q = 0.6 W m^{-2}. When T_2 = 300K, T_1 = 40 K, and N = 10 (in tight places), Q = 1.5 W m^{-2}. From 40 K to 4.4 K with N = 2, the heat leak Q = 0.003 W m^{-2}.

The area of the quadrupole array multi-layer insulation system A can be estimated using the following algebraic expression:

$$A_i = \pi D_v L_v + 0.5 \pi D_v^2 + N_B \pi D_B L_v \qquad \text{-10-}$$

where D_v is the diameter of the outer cryostat vacuum vessel; L_v is the length of the cryostat vacuum vessel; N_B is the number of quadrupole bores in the array; and D_B is the diameter of the quadrupole bore tube. For the magnet shown in Figure 5, D_v = 0.85 m; N_B = 16; and D_B = 0.09 m. The area of the insulation system A_i = 6.17 m^2. The insulation system area A_i is dominated by the area of the inside of the quadrupole bore tubes. The sixteen quadrupole bore tubes alone have a surface area of 3.17 m^2. The heat flow through 25 layers of insulation from 300 K to 40 K is about 3.70 W. The heat flow through two layers of insulation from 40 K to 4.4 K is about 0.02 W. If the number of layers of insulation is decreased in the quadrupole bore tubes between 40 K and 300 K, the heat leak will go up. For ten layers of insulation around the quadrupole bore tubes and twenty-five layers of insulation everywhere else, the total insulation heat leak from 300 K to 40 K will increase from 3.7 W to 6.56 W. The heat leak through the insulation around the quadrupole bore tubes is the single most important heat leak between 300 K and 40 K. From 40 K to 4 K, the heat leak through the multi-layer insulation is not very important compared to the heat leak through the HTS leads and the cold mass supports.

Heat leaks into the cryostat through the stainless steel bayonet joints in the helium tubes can be estimated using equation 1. It is assumed that there are four 304 stainless steel tubes that are 12.7 mm in diameter and have a wall thickness of 0.35 mm. The value of G for stainless steel from 4.4 K to 40 K is 75 W m^{-1} and the length of these tubes is about 0.2 m. The heat leak into the 4.4 K region = 0.02 W. Between 300 K and 40 K there are six 12.7-mm diameter tubes with 0.35 mm walls. If the length of these tubes is 0.2 meters and the value G from 40 K to 300 K is about 2950 W m^{-1}. The heat leak down the tubes to 40 K = 1.23 W. In order to make a significant reduction of the heat leak into the 40 K region, one must not use bayonet joints. Hard plumbing the helium piping into the cryostat can reduce the heat flow due to the plumbing by over an order of magnitude. The down side of hard plumbing is that one loses ease of assembly and disassembly of the plumbing and the cryostats.

Heat leaks down instrumentation wires from room temperature to 4.4 K can also be calculated using Equation 1. If there is thirty 0.5 meter long wires that are 0.25 mm in diameter and G = 3025 W m^{-1}, the heat leak into the 4.4 K region is about 0.01 W. Shorter wires could be wrapped around the 40 K pipe to provide some thermal intercepts for the instrumentation wires.

The heat leak down the HTS leads is dependent on the temperature at the top of the lead and the current carrying capacity of the lead. An approximate equation for the heat flow down a pair BSSCO and silver leads is given as follows:

$$Q = 0.00025\, I\, [T/40]^3 \qquad \text{-11-}$$

where Q is the heat flow down the lead; I is the design current for the HTS leads; and T is the temperature of the top of the HTS lead. For a pair of leads designed to carry 1000 A, with an upper end temperature of 50 K, the approximate heat flow down the leads to 4.4 K is about 0.39 W. If the HTS leads must operate at liquid nitrogen temperature (80 K) at the top end, the heat leak into the 4.4 K region through a pair of these leads will go up to about 1.0 W. In the next few years, as new materials

-

come into use, one can expect improvement in the thermal performance of HTS current leads between 50 K and 4.4 K.

A pair of gas cooled leads carrying 1000 A requires about 0.1 grams per second of helium to cool the leads. In the process of cooling the leads between 50 K and 300 K, the gas in the leads picks up about 130 W of heat from the leads. In optimized leads, virtually all of the heat picked up by the helium flowing through the leads is generated by lead resistive heating. (The net heat flow into the leads from 300 K is zero.) If the gas cooled leads are optimized, the voltage drop per lead will be about 65 mV (compared to 80 mV for gas-cooled leads with their lower end temperature of 4.4 K).

Table 1. Heat Flow into the 4.4 K and 40 K Regions of a Sixteen Bore Quadrupole Array Cryostat

Source of Heat Flow	Cryostat Heat Flow (W)	
	4.4 K Flow	40 K Flow
Cold Mass Support System	0.12	2.78
Multi-layer Insulation System	0.02	6.56
Helium Bayonet Tubes	0.02	1.23
Instrumentation Wires (15 pairs)	0.01	----
1000 A Magnet Current Leads	0.39	----
TOTAL HEAT FLOW	0.56	10.57

Table 1 above sums up the calculated heat flows into the 4.4 K and 40 K regions of a closely packed sixteen bore quadrupole array cryostat with a cold mass of 350 kg. The sixteen 90-mm diameter warm bore tubes have ten layers of superinsulation between 40 K and 300 K. Every where else in the cryostat, there is twenty-five layers of superinsulation was assumed. A column support system (See Figure 5) was assumed for the cryostat in Table 1. Table 2 below compares the cold mass, the 4.4K heat leak and the 40 K heat leak for various quadrupole array options.

Table 2. Cold Mass and Heat Flow Comparisons for a Number of Quadrupole Array Cryostats

Quadrupole Array	Bore ID (mm)	Can OD (mm)	Cold Mass (kg)	Cryostat Heat Flow (W)	
				4.4 K Flow	40 K Flow
Loose Packed 3 by 3	90	850	480	0.61	9.51
Close Packed 3 by 3	90	700	260	0.52	7.35
Close Packed 4 by 4	90	850	350	0.56	10.57
Close Packed 4 by 4	60	675	150	0.47	6.91
Close Packed 4 by 4	120	1065	670	0.68	15.36

The 90-mm bore arrays shown in Table 2 all have a design gradient for the quadrupoles of 73 T m^{-1}. The 60-mm bore array has a design gradient of 100 T m^{-1}, and the 120-mm bore array has a design gradient of 57 T m^{-1}. All of the arrays shown in Table 2 have ten layers of insulation around the warm bore tube and twenty-five layers of insulation everywhere else. All arrays operate at 1000 A.

-

Conduction Cooling of the Magnet Coils

The quadrupole arrays shown in Figure1 and Figure 4 are assumed to be conduction cooled. This means that there is no flowing helium in the superconducting winding. The primary disadvantage of no helium in the winding is the fact that the specific heat of the windings is very low at 4.4 K. If ten percent of the winding volume contains liquid helium, the effective volume specific heat of the coil package goes up by an order of magnitude. This order of magnitude increase in effective specific heat can protect the magnet against premature quenches. The helium in the winding does not have to flow in order to have the increase in specific heat and additional protection against training.

Helium in the windings is both a benefit and curse. The curse manifests itself in several different ways: 1) A coil with helium in it has a lower modulus of elasticity than a coil without helium in the winding. Some coil configurations are difficult to make tight unless they are potted. A loose coil will move more than a tight one. The advantage of having the helium in the windings may be lost. 2) The pressure rise of helium in the windings must be dealt with during a magnet quench. This means that more radial space within the coil bore must be used for a helium vessel. Either the heat leak must be increased or the magnet must be made bigger. For a given pole induction, the quadrupole gradient will go down. 3) Helium in the winding makes the magnet plumbing more complicated. From the standpoint of the magnet cryostat and cryogenic system, it is better to simplify the cryostat. As a result, potted winding with conduction cooling to two-phase helium cooling tube attached to the outside of the cold mass has been assumed.

Once the decision to use conduction cooling of the magnet coils has been mage it is useful to look at the heat flows in the system and the temperature rises of various points in comparison to the temperature of the helium in the cooling tube (assumed to be 4.4K). Figure 12 below shows the heat flow resistance diagram for the magnet conduction cooling. Useful information from the resistance diagram includes the temperature at the base of the HTS lead (4.8 K) and the magnet coil temperature (4.406 K).

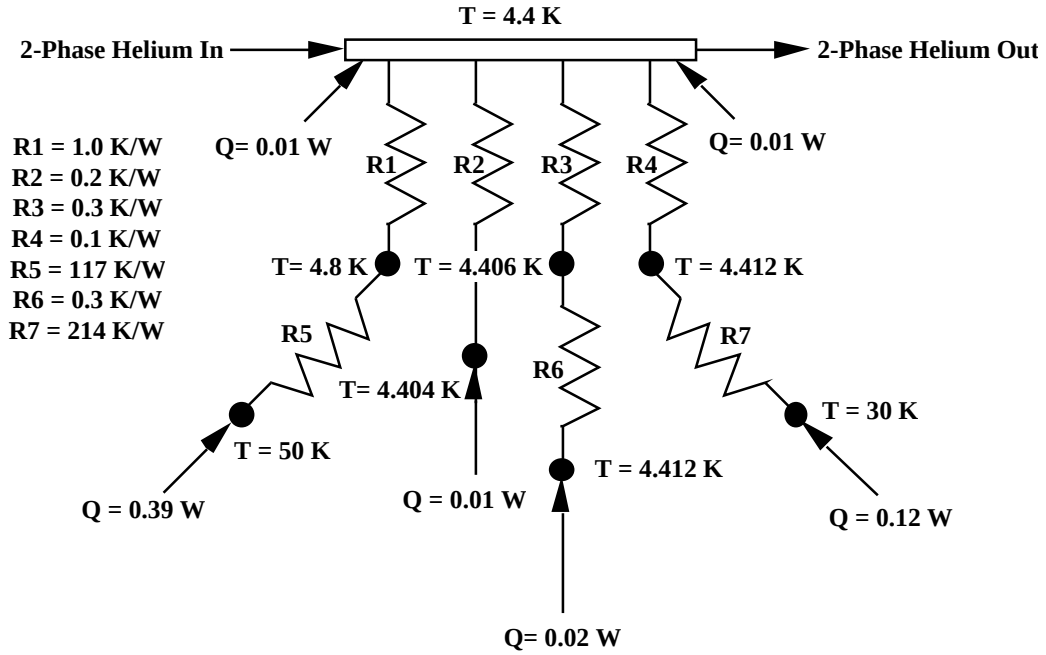

Figure 12. The Conduction Cooling Thermal Resistance Diagram

-

In Figure 12 on the previous page, the first conduction stream (through resistors R1 and R5) carries heat down the leads to the cooling tube attached to the magnet. A temperature drop between the base of the HTS leads and the cooling tube was calculated. The HTS leads are cooled through a 0.3-mm thick piece of NEMA-G10 sheet to the magnet cold mass. The heat flow down the lead (0.39 W for a pair of 1000 A HTS lead with an upper end at 50 K) is taken to the base of the leads, which will sit at 4.8 K. An alternative way of cooling the base of the leads is to cool the lead base directly using two-phase helium. In-line insulators would have to be installed in the helium line if cooling is supplied to the lead base in this way. Even with pure conduction cooling through plastic to the base of the HTS leads, will allow the base of the HTS leads be cold enough for niobium titanium conductor from the coil to be attached there.

The second heat flow stream (through R2) represents the radiation heat transfer to the cold mass from the outside of the cryostat and heat flows down instrumentation wires. Even if this heat load is changed by an order of magnitude, this temperature drop is negligible.

The third heat flow stream (through resistors R3 and R6 represents the heat flow through the insulation inside of the quadrupole bores. R3 represents the thermal resistance from the outside of the coil to the helium cooling tube. R6 represents the thermal resistance from inside the coil to the outside surface of the coil. R3 is much larger than R6 so most of the temperature drop occurs between the outside of the coil and the cooling tube. It is assumed the thermal path is through a strip of 3-mm thick pure copper that is about 240 mm long. Increasing the heat flow to the inner surface of the coil by an order of magnitude will begin to affect the temperature drop to the cooling tube. A two order of magnitude increase in this heat flow will make the temperature drop between the inside of the coil and the cooling tube unacceptably large.

The fourth flow path is from the top of the cold mass support to the cooling tube. Since R4 is much smaller than R7, the temperature at the cold mass support point is only about 0.012 K above the temperature of the cooling tube. The remaining 0.02 W of heat leak shown in Figure 12 enters the cooling tube directly from the helium bayonet joints.

Cooling the Quadrupole Array and Its Shields and Leads Using a Conventional J-T Refrigerator

The quadrupole array will be cooled by conduction from the 6061-aluminum support structure. The aluminum support structure will be cooled by forced two-phase helium flowing in tubes attached to the support structure. Forced two-phase helium cooling has been used to cool detector for over twenty years. The advantages of two-phase tubular cooling are as follows[16]: 1) There is very little helium within the magnet cryostat. As a result, there is very little helium to be boiled in the event of a magnet quench. 2) The two-phase helium tubes have a high pressure rating (over 10 MPa). This means that the magnet cryostat is not a pressure vessel. A tubular cooled magnet is much less of a potential safety hazard. 3) Forced two-phase helium cooling does not require a cold compressor or a helium pump to circulate the helium through the magnet cooling system. The pressure supplied by the refrigerator compressor is sufficient to circulate the helium through the magnet cooling tubes. 4) The helium temperature in a two-phase helium cooling circuit decreases as it along the flow circuit. In supercritical helium flow circuits, the temperature rises along the flow circuit. Additional helium mass flow is needed in a supercritical flow circuit to limit this temperature rise. 5) The pressure drop along a two-phase helium flow circuit is generally lower than for a supercritical helium flow circuit. 6) If needed, cooling for leads and shields can be drawn from the two-phase helium flow circuit. The flow instability in a two-phase flow circuit talked about in the literature can be avoided if the flow circuit is properly designed. A large number of superconducting solenoid magnets have been cooled using forced flow two-phase helium in tubes.

-

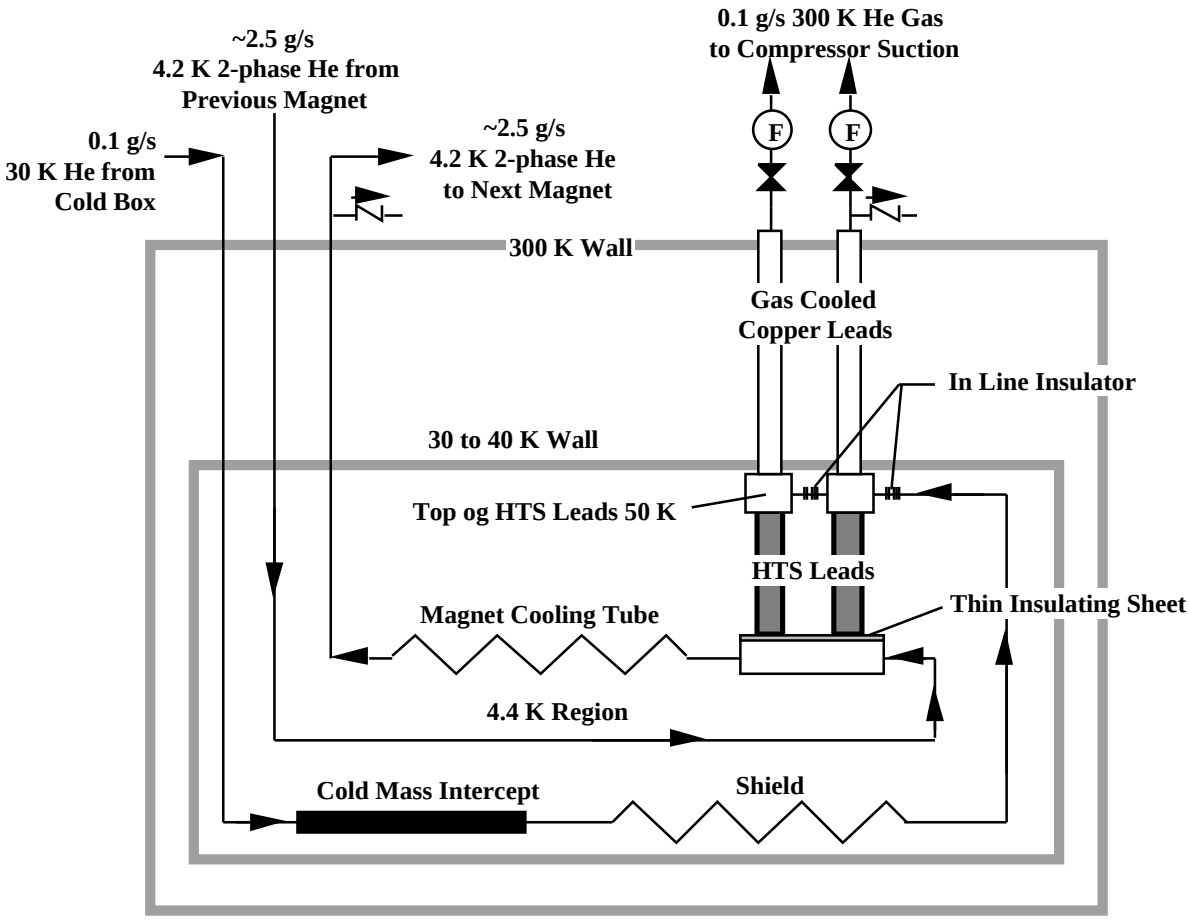

Figure 13. The Cooling Circuit for the Quadrupole Array, Its Shields and Its Gas Cooled Leads

Figure 13 above show the proposed two-phase helium cooling system for the quadrupole array. It is assumed that the magnet shown is one of fifteen to twenty magnets that are cooled in series from the two-phase helium refrigerator and control dewar. If twenty magnets are cooled in series, the mass flow rate through the flow circuit should be about 2.5 grams per second. The helium flow can be carried by an aluminum tube with an outside diameter of 10 mm and a wall thickness of 1 mm. The burst pressure for this tube will be above 35 MPa. The two-phase helium tube can be attached directly to the superconducting coil support structure, the base of the HTS leads and the attachment points of the cold mass supports. The heat that is added to the two-phase helium flow stream in each of the solenoid is expected to be about 0.6 W.

The shield gas comes from the refrigerator at a temperature of about 30 K. This gas enters the magnet cryostat through a single vacuum insulated tube. The helium flow in this tube is about 0.1 grams per second. The shield gas stream picks up heat from the cold mass supports and radiation on the shield. The expected heat load into this stream is about 10.6 watts. The 30 K helium stream temperature rises about 20 K as it flows to the base of the gas-cooled leads. It is proposed that the gas used to cool the shields and the cold mass support intercepts be used to cool the gas-cooled leads between 50 K and room temperature. The gas exiting the room temperature end of the gas-cooled leads returns warm to the refrigerator compressor suction. The mass flow of 0.1 grams per second per magnet in the shield circuit is determined by the needs of the gas-cooled electrical leads. If the magnet current were 2000 A, instead of 1000 A, the gas flow in the shield and lead circuit would be about 0.2 grams per second. The

-

increase in mass flow required for the leads means that the temperature rise in the shield circuit will be reduced. Using 2000 A instead of 1000 A leads means that the shield cooling gas can be drawn from the refrigerator at 40 K instead of 30 K. Drawing the shield gas off at a higher temperature means that a smaller helium refrigerator can be used to cool the magnets.

The heat that flows down the HTS leads must flow to the phase helium cooling circuit. Figures 12 and 13 assume that this heat flows through an electrically insulating fiberglass-epoxy sheet that is about 0.3 mm thick. From Figure12, one see that the temperature-drop across this sheet is about 0.4 K for a heat flow of 0.4 W down the leads. The Nb-Ti superconductor from the coils is attached to the HTS leads at this point. One would like to minimize the temperature rise in the niobium titanium leads from the superconducting coils to the HTS. An alternative approach, shown in Figure 14 below, is to cool the base of the HTS lead directly. The niobium titanium entering the HTS leads will be very close to the temperature of the two-phase helium in the cooling tube. In order to cool the base of the HTS leads directly, three in-line insulators must be in the two-phase helium cooling circuit. When one uses in-line insulators in the two-phase helium cooling circuit, the value of the thermal resistance R1 in Figure 12 is reduced to nearly zero. As a result, the temperature of the base of the HTS leads is the temperature of the two-phase helium (about 4.4 K).

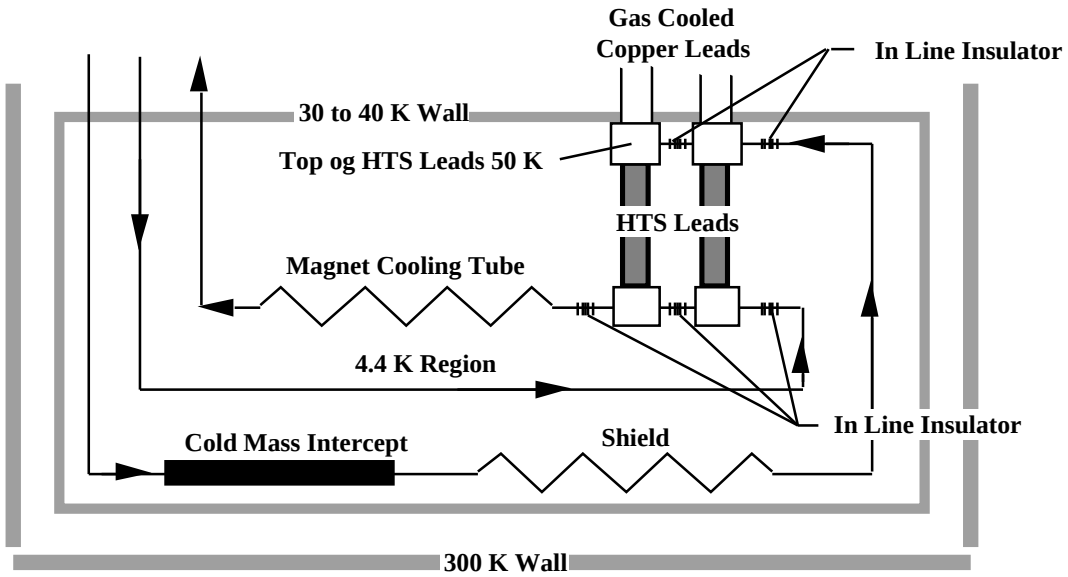

Figure 14. A Modification of the Quadrupole Array Cooling Circuit with Three In-line Insulators In the Two-phase Helium Line on Either Side of the HTS Current Leads

It has been assumed that fifteen to twenty magnets can be cooled from a single two-phase helium flow circuit. One can consider operating up to four or five flow circuits from a single refrigeration cold box. The cold box will be designed to deliver two-phase helium produced by a Joule-Thompson (J-T) expansion valve. Expanding the helium through a cold two-phase helium engine would be more efficient, but it adds complexity to the cooling circuit. The return helium gas at 4.4 K is delivered back to the low-pressure side of the J-T heat exchanger. The shields and gas-cooled electrical leads are supplied with 30 to 40 K helium from an appropriate point on the high-pressure side of the refrigerator heat exchanger. The temperature of this helium temperature depends on the lead current and the maximum allowable temperature for the HTS leads. The gas used to cool the shields and leads is returned to the compressor suction at room temperature.

-

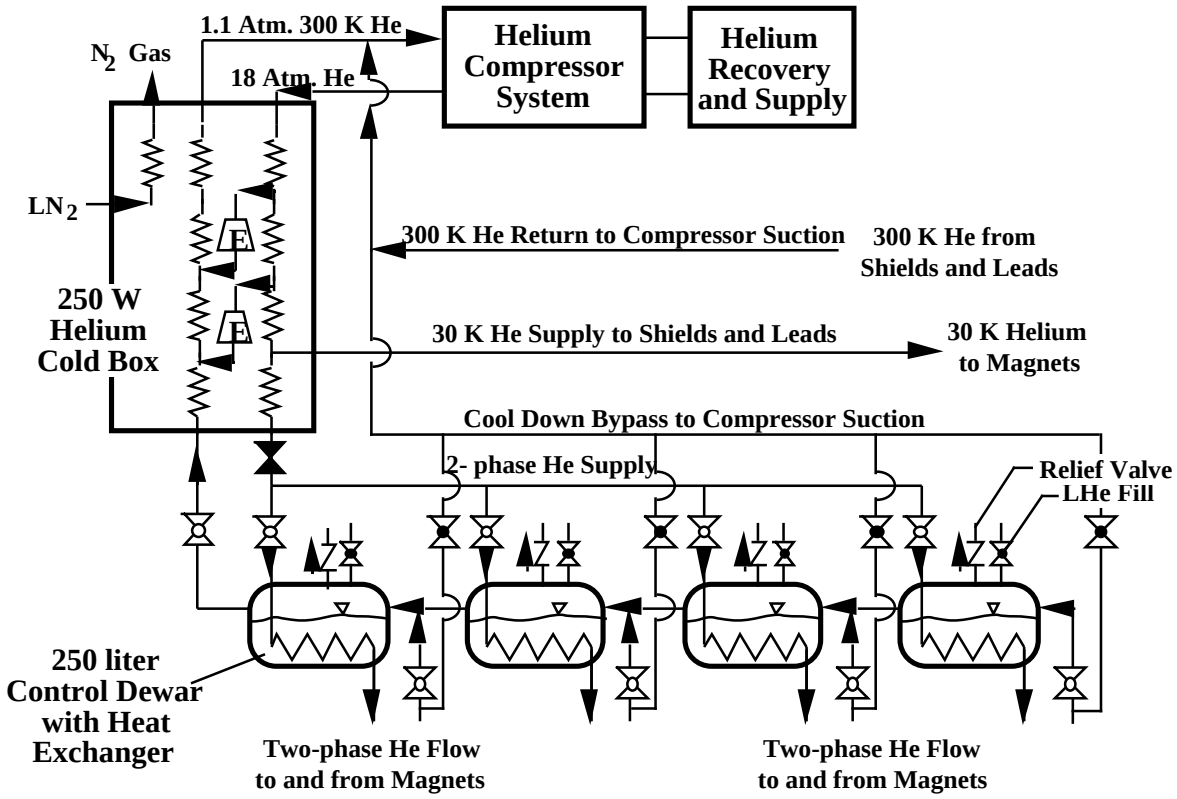

Figure 15. The Refrigerator, Control Dewars and Helium Flow System for Sixty Quadrupole Arrays

Figure 15 above shows a schematic of the refrigerator and helium flow system that delivers two-phase helium and 30 K helium gas to the quadrupole arrays in the induction linac tunnel. The 250 W refrigerator (a single Fermilab satellite refrigerator) shown in Figure 15 can cool up to sixty quadrupole arrays that each have a pair 1000 A leads to room temperature. The number of magnets that can be cooled from the circuit shown above depends on how efficient the transfer lines are. If the 4.4 K helium supply and return lines share a common vacuum, the total transfer line loss for the string can be kept down to about 50 W. With a transfer line heat leak of 50 W, the 250 W refrigerator shown in Figure 15 should cool up to sixty quadrupole arrays. If the magnet lead current is increased to 2000 A, the gas temperature for the shield and lead cooling circuit can be increased to 40 K from 30 K. As a result, the same 250 W refrigerator shown above would cool up to forty-five quadrupole arrays. If standard gas cooled leads are used in place of the HTS leads, the refrigeration system shown above will only cool about ten quadrupoles powered with 1000 A leads.

The flow system shown above assumes that up to fifteen quadrupoles are cooled with a single two-phase helium series circuit. Each of the four series circuits shown in Figure 15 has a 250-liter control-dewar with a heat exchanger to sub-cool the two-phase helium entering the magnet flow circuit. The heat exchanger within the control-dewar is the key to making the two-phase flow operate in stable way. The pressure on the two-phase helium in the control-dewar is at the pressure of the low side of the refrigerator heat exchanger. This pressure and hence the temperature of the liquid helium is always lower than the temperature and pressure of the two-phase helium entering the heat exchanger from the refrigerator J-T valve. Since the pressure drop along the two-phase helium flow circuit is about 0.015 to 0.03 MPa (2.2 to 4.5 psig), the maximum temperature drop across the heat exchanger in the control-dewar is 0.1 to 0.2 K. The gas phase in the two-phase helium flowing from the J-T valve is condensed in the control-dewar heat exchanger. The helium flow stream leaving the control-dewar is pure liquid

-

helium that is slightly sub-cooled. Because the control-dewar heat exchanger shifts the two-phase helium from the gas side of the two-phase dome to the liquid side of the two-phase dome, the pressure drop in the two-phase helium flow circuit is reduced a factor of three.

One can use the helium refrigerator for magnet cool down. Flow from the J-T valve goes through the control dewar heat exchanger to the string of fifteen or so superconducting magnets. Warm helium returning from the superconducting magnet string should bypass the control dewar and the refrigerator cold box and return to the compressor suction directly. The cooling for the magnets comes from the refrigerator liquid nitrogen pre-cooling and from the refrigeration output from the refrigerator expansion engines. If there is adequate refrigeration available at 4.4 K, the refrigerator will be capable of cooling the string of magnets without any added liquid helium. However, adding liquid helium to the control dewar when the first magnet in the string reaches 25 K will speed up the last part of the magnet cool down for that string[17].

In order to cool the magnet shields to a temperature between 30K and 50 K and the gas cooled leads from 50 K to room temperature, a separate 30 K helium flow circuit must be brought out from the refrigerator cold box. The 30 K flow circuit is brought out from the high-pressure side of the refrigerator heat exchanger at some point below the temperature where the gas enters the second expansion engine. The gas withdrawn from the refrigerator to cool the magnet shields and leads is returned to the refrigerator warm at the compressor suction. During normal operation the 4.4 K refrigeration required is about 0.6 W per quadrupole plus about 50 W for heat leaks into the helium transfer lines and the control dewars. In addition, up to 6 grams per second of helium gas at 30 K is needed to cool the magnet leads and shields. The additional 6-g s^{-1} of helium at 30 K gas flow means that additional heat exchanger area may be needed in the refrigerator to cool the extra gas flow. The need for additional gas flow is also reflected in larger compressors as well. The cooling required for sixty quadrupole magnets with 1000 A leads is equivalent to about 185 W of refrigeration at 4.4 K, (assuming transfer line losses of only 50 W). The refrigerator should be sized to be 30 to 50 percent larger than the projected magnet cryogenic equivalent heat load at 4.4 K. One Fermilab satellite refrigerator with a final J-T valve expander can produce about 250 W at 4.4 K. Replacing the J-T valve with a wet expander increases the refrigeration output at 4.4 K to about 400 W. Unfortunately, a wet expander does not affect the performance of the upper heat exchangers in the cold box. Depending on the transfer line heat leak, a satellite refrigerator should be able to cool up to sixty quadrupoles.

The time needed to cool down the sixty quadrupoles with a cold mass of 350 kg each is dependent on the size of the refrigerator used to do the cool down. A single satellite refrigerator should be capable of delivering up to 7 grams per second to the load being cooled. Based on the cool down time for the solenoid used in the PEP-4 experiment at SLAC, a 250 W satellite refrigerator should be able to cool sixty quadrupoles, the transfer lines, and the control dewars in 10 to 12 days[17]. A faster magnet cool down either requires a larger helium refrigerator or liquid nitrogen pre-cooling of the cold mass.

The Magnet Current Leads

The current leads for the quadrupoles consists of a pair of HTS leads with a pair of gas-cooled tube leads cooled with helium gas from the magnet shields. For this study, the leads are rated at 1000 A with the top of the high temperature superconductor (HTS) leads at 50 K. Figure 16 on the next page shows a schematic of the HTS and gas-cooled lead assembly. The bottom of the HTS leads are shown as being cooled by two-phase helium after it has entered the magnet cryostat (See Fig. 14). The top of the HTS leads is cooled using 50 K helium leaving the magnet shields and intercepts. This gas intercepts heat coming down the gas cooled leads as it goes up the leads. The gas from the gas cooled leads nominally exits from the leads at 300 K, and it goes to the refrigerator compressor intake. (See Figs. 14 and 15)

-

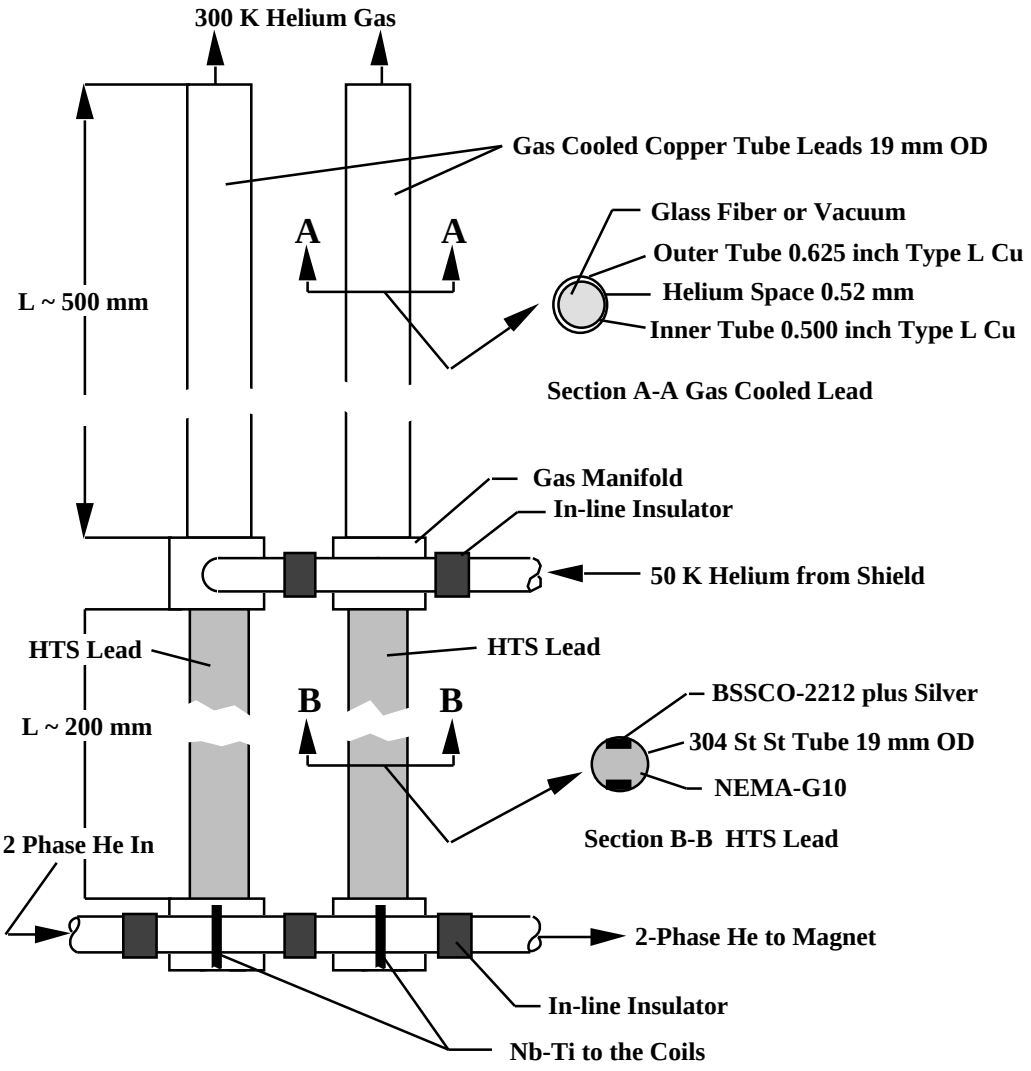

Figure 16. A schematic of the 1000 Ampere HTS and Gas-Cooled Electrical Leads

The proposed HTS leads are similar to a pair of American Superconductor leads that were built for the SuperBend dipole. These leads have a single silver BSSCO-2212 element that has cross-section dimensions of about 6 mm by 3 mm. This conductor will carry over 350 A with its top end at 82 K (the SuperBend lead specification). This same piece of BSSCO-2212 should carry over 500 A at 60 K. The HTS lead cross-section shown in Figure 16 shows two pieces of BSSCO-2212 with a 3-mm by 6-mm cross-section. The heat leak down a pair of 1000 A leads made from BSSCO, silver, NEMA-G10 and 304 stainless steel tube should be under the 0.39 W estimated provided the upper end temperature is kept at 50 K or lower. It is expected that one will be able to purchase a pair of 1000 A HTS leads from at least two vendors. The length of the leads is expected to be between 150 and 200 mm. Tests of the SuperBend leads indicate that the HTS lead section is quite robust and resistant to quenching. One can protect the HTS leads by discharging the quadrupoles with a time constant of about 100 seconds or less. This may or may not quench the magnets. That is dependent on the details of the coil and support structure design.

-

The gas-cooled leads assumed are nested copper tubes with helium gas flowing up between the tubes[18]. The inner tube can be made from a 0.500-inch type L phosphorus de-oxidized copper tube with an OD of 15.88 mm and a wall thickness of 1.02 mm. The inner tube alone can carry 476 A at a current density of 10 A per square mm. The outer tube can be a 0.625-inch type L phosphorus de-oxidized copper tube with an OD of 19.05 mm and a wall thickness of 1.07 mm. At a current density of 10 A per square mm, this tube alone will carry 604 A. The helium flowing up the lead flows through the 0.52-mm thick annular space between the two tubes. At a rated current of 1000 A, the optimum length for the pair of tubes is 500 mm. It should be noted that the leads can be made with a 0.625 and 0.75 inch type M tubes, but the annular space between the tubes is increased to 0.81 mm. The type M tube leads are less compact and less efficient because of the increased annular space between the tubes. The inner tube of the pair should have helium and glass-cloth in it. The inner tube can also be evacuated. Do not let the allow air to be in the inner tube. The outer tube is in the cryostat vacuum. The orientation of nested tube leads is not an issue. These leads will operate as well with the cold end up and the warm end down as they do with the cold end down and the warm end up. Gas cooled leads of this type have operated successfully on the PEP-4 detector magnet and the large g-2 experiment magnet. The gas-cooled leads can operate for over thirty minutes without gas flow. Before the gas cooled leads fail, the HTS leads will go normal forcing the magnet to quench. When the nested tubular gas cooled leads are combined with HTS leads, a compact lead package results. This is an advantage of operating the top of the HTS leads well below liquid nitrogen temperature.

The Quadrupole Quench Protection System and Its Effect on Cooling

A key element of the cryostat and lead design is putting the magnet quench protection system inside of the magnet cryostat. The standard sixteen-quadrupole array may have a stored energy of as much as 480 kJ (about 30 kJ per quadrupole assuming at that induction at the coil at the closest point is 4 T). The average current density in the winding needed to generate the quadrupole field is about 215 A mm^{-2}. The current density in the superconductor and matrix material would be about 300 A mm^{-2}. Since all of the quadrupole in the array are assumed to be hooked in series, the EJ^2 limit for a single 16 quadrupole array with a 90 mm warm bore quadrupoles would be about $4.3x10^{22}$ A^2 m^{-4} J.

In theory, because the EJ^2 limit is below 10^{23} A^2 m^{-4} J, the sixteen 90-mm warm bore quadrupole array can be protected using a simple resistor dump circuit. At a quadrupole array current of 1000 A, the resistance of the dump resistor would be around 0.6 ohms[19]. (The L/R time constant for the dump circuit must be about 1.5 seconds when the current density in the superconductor plus matrix material is 300 A mm^{-2}.) This type of quench protection would permit one to extract a portion of the quadrupole stored energy. In order to protect the quadrupole array during a quench using a dump resistor, the quench must be detected before the dump resistor can be put across the quadrupole leads. The quench detection circuit must be very reliable in that it must detect all quenches when they occur. At the same time, the quench detection circuit should not detect quenches when they do not occur (the false positive problem).

An alternative approach is to shunt the quenching quadruple through a diode and resistor. This method of quench protection is commonly used on MRI magnet that operate in persistent mode. Magnet that operate in persistent mode can not be discharged through an external dump resistor, because the magnet current is carried within the magnet cryostat (except when the persistent switch is open during charging and discharging). MRI magnets are subdivided into coils that are hooked together in series. The leads for these coils are brought out of the magnet coil package. Cold diodes and balancing resistors are hooked in parallel with the coil being protected. When a coil goes normal, a voltage is generated across the coil. If this voltage is greater than the forward voltage of the coil diode (typically 2 to 5 V), current from the coil that is turning normal will be shunted through the diodes. The magnet

-

discharge can trigger an adjacent coil to become normal through direct thermal conduction or through quench back from a nearby structure. Very large MRI solenoids, with stored energies up to 50 MJ, have been protected by shunted the current in the section that is quenching through cold diodes. The diodes are protected by balancing resistors that ensure that the voltage across the diode is balanced during normal charging and discharging of the magnet. A schematic diagram of a cold diode protection system that can be used for a sixteen-quadrupole array is illustrated in Figure 17 below.

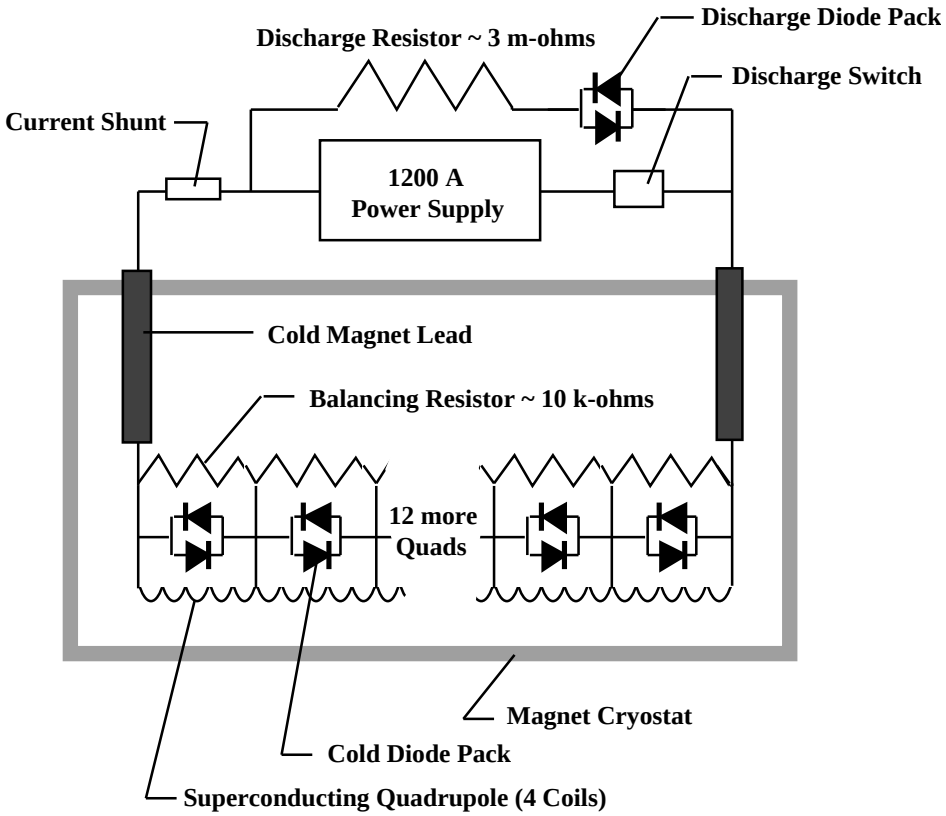

Figure 17. A Schematic Diagram of a Cold Diode Bypass Quench Protection System

The quench protection system shown above is completely passive. No quench detection is needed before the quench protection system is activated. For 1000 A quadrupoles, the quench protection system becomes activated when the resistance of the quenching coil reaches about 0.0025 ohms. At that point, the cold diode carries current in the forward direction effectively shunting current from the coil that is going normal. Because the system is passive, none of the stored energy of the quadrupole array can be extracted. Unlike the active quench protection using a dump resistor, the system shown in Figure 17 must dump all of the magnet stored-energy into the magnet cold mass. The energy dumped into the cold mass for a sixteen-quadrupole array with 90-mm warm bores is about 1.4 kJ per kg. This number should be compared to the energy removed during a magnet cool-down (typically 120 kJ per kg). The average temperature of the quadrupole array after a quench will be about 45 K. The hot spot temperature in the superconducting coil should be below 150 K. The time needed to remove the quench heat from the magnet depends on the amount of helium in the control dewar and the mass flow through the helium cooling circuit. In most cases, the magnet re-cool should take less than one hour.

-

Cryogenic Vacuum Pumping for the Accelerator Vacuum

It has been suggested that the quadrupole cold bores can be used to provide pumping for the vacuum accelerator vacuum system. The primary argument in favor of this approach is that the magnet bore has a very high vacuum pumping speed compared to the external vacuum pumps that would be used in an induction linac system with room temperature magnets. It is also argued that using the magnet cold bore to do the pumping is not so different from what is done on HERA and was proposed for the SSC. Cold bore vacuum pumping has been used or proposed for a number of different accelerators. The question is; is it a good idea to employ cold magnet bore pumping for the induction linac?

The pumping speed for a single quadrupole bore hole can be estimated using the following analytic expression;

$$\text{Pumping Speed} = \alpha\, \pi\, r^2\, [1-(r/L)^2]\, [3RT]^{0.5} \qquad \text{-12-}$$

where the pumping speed per quadrupole hole is given in cubic meters per second. α is a form factor between the outside of the cryostat and the actual pumping surface (α is about 0.7); r is the warm bore radius in meters; and L is the length of the magnet cryostat in meters. T is the absolute temperature of the vacuum space outside of the magnet, and R is the universal gas constant (R = 8314 J K^{-1} $mole^{-1}$) divided by the molecular weight of the gas in the vacuum space (the molecular weight of air is 29). The total pumping speed per magnet is two times the number of bores in the array. For a typical sixteen-quadrupole array with 90-mm diameter bores, the pumping speed for an array that is 0.7 mm long would be about 72 cubic meters per second. This is a large pumping speed, but it is not achieved without cost.

The heat flow due to radiation into the magnet bore can be estimated using the following analytic expression:

$$Q_R = \alpha\, \pi\, r^2\, [1-(r/L)^2]\, \varepsilon\, \sigma\, T^4 \qquad \text{-13-}$$

where the radiation heat flow Q_R is given in watts. α is a form factor between the outside of the cryostat and the actual pumping surface (α is about 0.7); r is the warm bore radius in meters; and L is the length of the magnet cryostat in meters. σ is the Stefan-Boltzmann constant ($\sigma = 5.67 \times 10^{-8}$ W T^{-4}), and ε is the average emissivity of the hole. If the $\varepsilon = 1$, the heat flow into a 90-mm diameter magnet bore is about 2 watts when T = 300 K. For a sixteen-bore quadrupole array the heat flow by radiation can be as large as 64 W, when the value of $\varepsilon = 1$. The question is what is the value of ε? At the start of pumping the effective value of ε can be as low as 0.1 (even with multiple reflections), but as the gasses freeze out on the cold bore surface, the effective value of ε must go up. Heat deposition into the magnet bore will start at 6.4 W, and it will go up with time.

The down side of vacuum pumping using the magnet bore as a pumping surface lies in the heat that is deposited on the magnet bore. When one looks at Figure 12, one can see what happens when one increases the heat flow to the inner bore of the magnet. If the effective value of $\varepsilon = 0.1$, the heat flow into the magnet bore tubes increases from 0.01 W to 6.4 W (without an intermediate temperature baffle). As a result the temperature drop from the inner surface of the magnet to the cooling tube increases from 0.006 K to about 4 K. This is unacceptable from a superconductor standpoint.

There are three alternatives for making bore tube pumping an acceptable option. The first is direct liquid helium cooling on the inside bore of the magnet. The second is installing a chevron type intermediate temperature baffle inside the magnet bore tube. The first two alternatives take up extra radial space within the magnet bore tube, and the effective pumping speed will be reduced. A third alternative is to reduce the fraction of the bore tube surface that is doing the pumping. For example, only the ends of the magnet bore do any pumping. As the fraction of the bore tube doing the pumping is

-

reduced, heat leak is reduced, and the pumping speed is reduced proportionally. In my opinion, pumping the accelerator vacuum using the cold bores of the quadrupoles as a cryogenic vacuum pump is probably not a viable option.

When one selects the method for pumping the accelerator vacuum, one should look at the whole picture. For example, the quadrupole bore is not the largest source for gas in the accelerator. In order to minimize the accelerator vacuum pressure and pressure changes in the accelerator vacuum system, one should either reduce the amount of gas being produced at the source or one should put the vacuum pumps close to the source. The bore of the quadrupole is neither the major gas source nor is it very close to the major gas source in the accelerator vacuum system.

Most of the gas produced by an induction linac comes from the insulator that is between magnet cryostats within an acceleration module. If the magnet cryostat is to be part of the vacuum pumping system for the accelerator, the pumping should occur at the cryostat ends near the outside of the cryostat in the radial direction. The vacuum pump should be close to the induction linac insulator.

The pumping surface for a cryogenic pump does not have to be at 4 K. If the pumping surface is coated with activated charcoal or molecular sieve, the pumping surface temperature can be at 12 K[20]. The molecular sieve and activated charcoal will pump hydrogen and neon at temperatures below 20 K. This suggests that a pair of ring shaped cryogenic pumps could be attached to the ends of the cryostat with refrigeration coming from the cryostat. The proposed cryogenic vacuum pump is similar in design to cryogenic vacuum pumps used in space simulation chambers.

Two-phase helium from the 4 K circuit could be used to cool the cryogenic pumping surface and the chevron shields around the pumping surface. A cross-section of a separate pump is shown in Figure 18 below. The cryogenic pump consists of a 90 K shield around a pumping plate at 12 K or less. Activated charcoal on the pumping plate can effectively pump hydrogen to low base pressures (below 10^{-9} torr). The pump shown in Figure 18 can have an outside diameter of about 840-mm. The pump inside diameter would be about 764 mm, which would effectively clear the ion beams coming through a closely packed sixteen-quadrupole array. Figure 19 on the next page shows the location of the cryogenic pump. Gold plating on the 90 K shield reduces the radiation heat flow onto the shield without adding multi-layer insulation that would increase out-gassing into the accelerator vacuum. The ring pump shown in Figure 18 can probably pump about 10 cubic meters per second (with a chevron transmission coefficient of 0.3) at 10^{-7} torr.

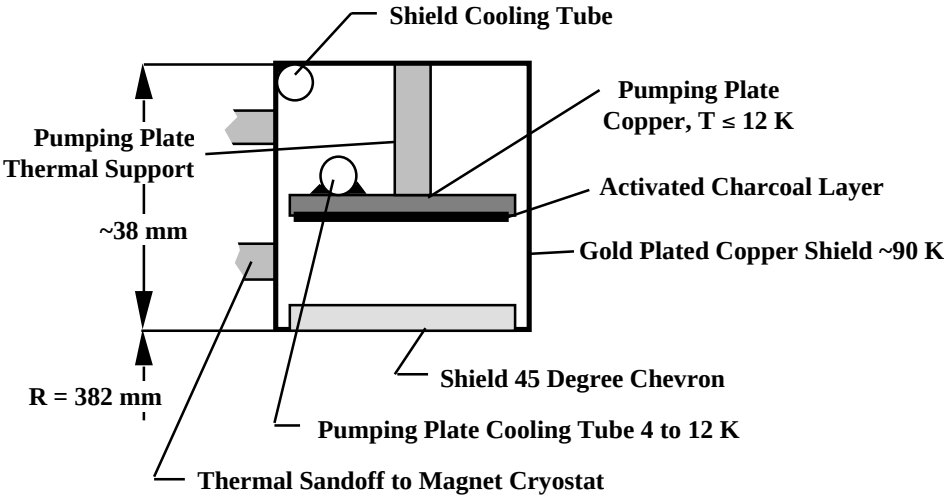

Figure 18. A Cross-section View of an Attachable Ring Cryogenic Vacuum Pump

-

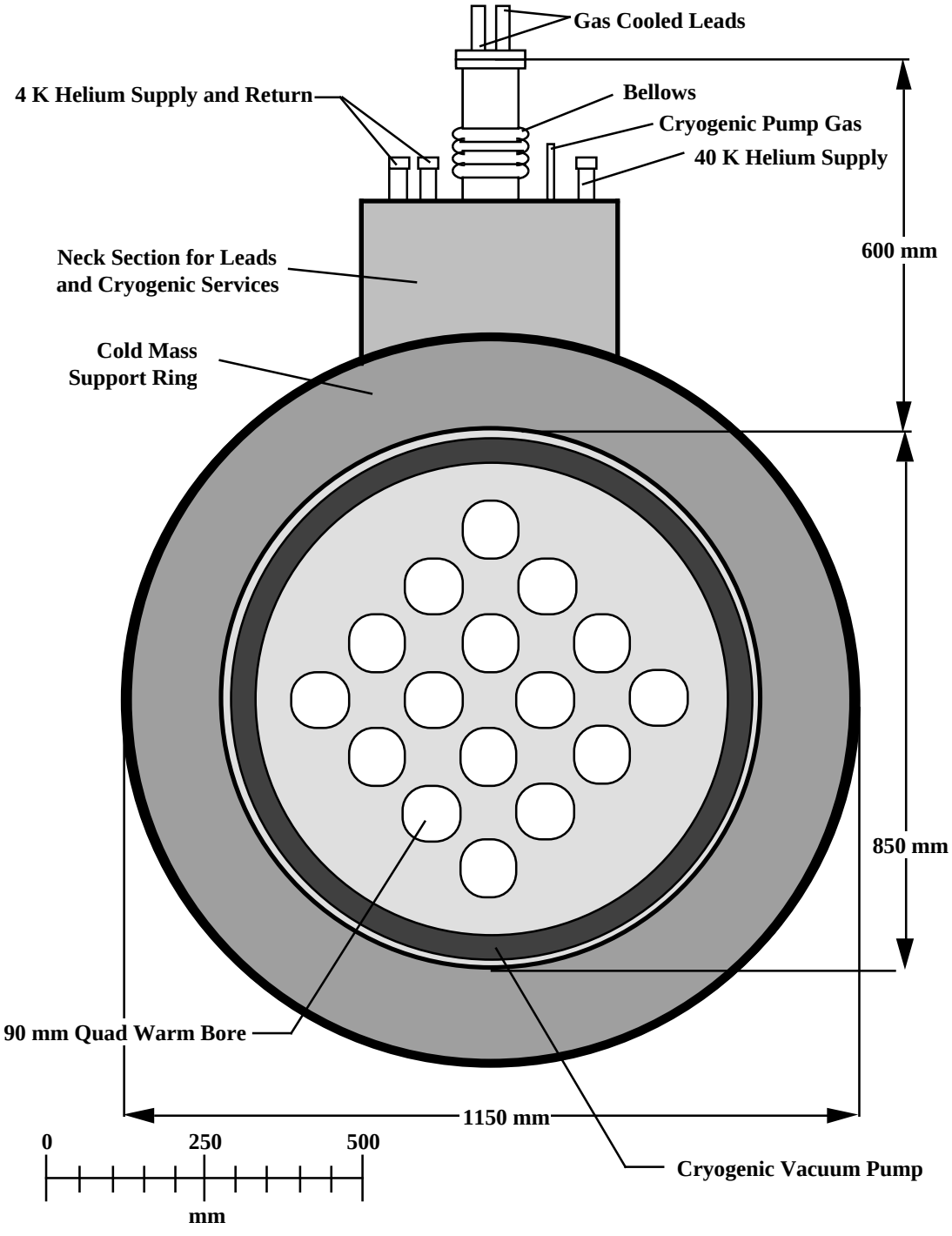

Figure 19. The Location of the Cryogenic Ring Pump at the End of the Array Cryostat

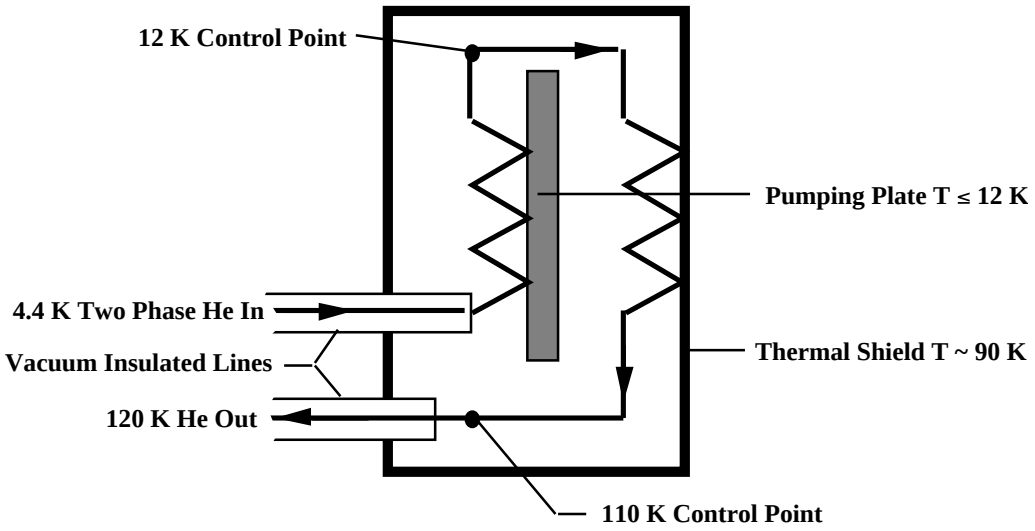

Figure 20. A Refrigeration Loop for a Cryogenic Vacuum Attached to the Array Cryostat

A cooling circuit for the vacuum pump is shown in Figure 20 above. The cooling for the vacuum pumping panel and its shield comes from the two-phase helium circuit used to cool the quadrupoles. Helium gas at pumping plate must be 12 K or lower. The temperature leaving the shield should be less than 110 K. The temperature of the gas leaving the shield and the temperature of the gas leaving the pumping plate can be used to control the flow of helium in the cryogenic pump cooling circuit. If the gas at either point is above its designated temperature, the flow in the vacuum pump cooling circuit must be increased until both temperatures are below their designated limits. Since each array cryostat has two pumps (one at each end), a single control valve in series with the two parallel cooling circuits can be used to control the helium flow for both pumps.

A pair of pumps as shown in Figure 18 will pump about 20 cubic meters of gas (air) at a pressure below 10^{-7} torr. In order to pump at this rate a two-phase helium mass flow of 0.015 grams per second is needed. This mass flow will be returned to the refrigerator at room temperature. Approximately 1.5 W of refrigeration at 4.4 K is needed to supply 0.015 grams per second of helium to the pumps. If vacuum pumps are included at the ends of each quadrupole array, a 250 W refrigerator will cool forty magnets instead of sixty.

Figure 19 above shows that the cryogenic transfer lines to and from the cryogenic pump is vacuum insulated. A vacuum insulated line permits on to operate the magnet without operating the cryogenic vacuum pump. To operate the magnet without operating the cryogenic vacuum pump one must close the valve in the pump circuit as it goes into the refrigerator compressor suction. Since the flow in the vacuum pump cooling lines is less than 0.01 grams per second per pump, a small diameter (< 2 mm ID) thin wall stainless tubes tube can be used to carry helium between the vacuum pump and the cryogenic flow circuits in the magnet cryostat.

The pump shown in Figures 18 and 19 can not be used as a roughing pump. The accelerator vacuum must be in the 10^{-4} torr range before the cryogenic pump can be turned on. Before turning on the cryogenic pump, the accelerator vacuum space should be roughed to below 10^{-5} torr and back filled with dry nitrogen gas at least twice before the cryogenic pumps can be started. It is desirable to minimize the amount of frozen water and carbon dioxide on the pump shield. Frozen water and carbon dioxide will increase the emissivity of the gold plating on the shield.

-

Magnet Scaling and Concluding Comments

Tables 1 and 2 show the scaling for the cryostat heat leak at 4 K and 40 K. Table 3 shows scaling for a number of the physical and electrical parameters for the quadrupole arrays. In all cases in the table below, the induction at the inside radius of the superconducting coil is assumed to be 4.0 T. The strength of the quadrupole is the induction at the coil divided by the radius to the closest point in the coil package to the quadrupole center. The peak induction in the windings is higher than 4 T in all cases. Once one knows the inner coil radius and the coil thickness one can scale to get the other dimensions of the quadrupole array. Tables 3 and 4 assume that the integrated focusing for the quadrupoles in the array is the same for all cases. This means that lower strength (larger bore) quadrupoles must be longer. In all cases the assumed design current for the quadrupole array is 1000 A. Changing the design current will change the magnet inductance and the refrigeration needed to cool the magnet.

Table 3 below compares the three cases shown in Figure 1. Table 4 on the next page compares the closely packed four by four array with three different bore diameters.

Table 3. A Comparison of Two Three by Tree Quadrupole -Arrays and One Four by Four Quadrupole-Array with the Same Focusing Strength

Quad Array Parameter	3X3 Loose	3X3 Close	4X4 Close
Number of Array Quadrupoles	9	9	16
Quadrupole Warm Bore (mm)	90	90	90
Type of Quadrupoles	Round	Diamond	Diamond
Induction at the Quadrupole Coil (T)	4.0	4.0	4.0
Minimum Coil Radius (mm)	60	55	55
Quadrupole Strength (T m^{-1})	66.7	72.7	72.7
Quadrupole Magnetic Length (m)	0.545	0.50	0.50
Quadrupole Array Cold Length (m)	0.65	0.60	0.60
Cryostat Overall Length (m)	0.75	0.70	0.70
Array Diamond Side Length (m)	0.605	0.48	0.605
Cryostat Vacuum Can Outer Diameter (m)	0.85	0.70	0.85
Cryostat Height (m)	1.46	1.31	1.46
Cryostat Neck Thickness (m)	0.11	0.11	0.11
Quadrupole Array Cold Mass (kg)	480	260	350
Quadrupole Design Current (A)	1000	1000	1000
Quadrupole Array Stored Energy (kJ)	400	270	480
Quadrupole Array Self Inductance (H)	0.80	0.54	0.96
Heat Leak into the Cryostat at 4.4 K (W)	0.61	0.52	0.56
Heat Leak into the Cryostat 40 to 50 K (W)	9.5	7.4	10.6
Beam Current Factor (16 Quad Array Case = 1)	0.56	0.56	1.00
Cryostat Mass Factor (16 Quad Array Case = 1)	1.37	0.74	1.00
Cooling Factor (16 Quad Array Case = 1)	0.96	0.78	1.00

The quadrupole array beam current factor is the beam current that can be carried by an array divided by the beam current that can be carried by the baseline case (a closely packed four by four array of 90 mm warm bore quadrupoles). The cryostat mass factor is the estimated overall cryostat mass divided by the cryostat mass of the baseline case. The cooling factor is the normalized 4 K cooling for an array

-

divided by the normalized cooling for the baseline case. The normalized 4 K cooling for any given case is the 4 K cooling plus the 40 K cooling divided by ten.

Table 4 below shows the effect of warm bore diameter on the various parameters for the magnets and their cooling system. Increasing the warm bore diameter from 60 mm to 90 mm increases the beam carried by about a factor of three. The cryostat mass goes up a factor of 2.3, while the refrigeration needed to cool the magnet goes up only forty percent. There is clearly a gain made by going to larger warm bore, but this is not done without increasing the size of the cores in the induction linac accelerators. It is not clear from this study that increasing the quadrupole bore diameter is the right thing to do. Clearly increasing the packing of the quadrupoles is desirable, provided the coupling between quadrupoles in the array does not result bad field within the quadrupole in the array.

Table 4. A Comparison of Three Sixteen -Bore Quadrupole Arrays with the Same Focusing Strength and Different Warm Bore Diameters

Quad Array Parameter	4X4 Close 60 mm Φ	4X4 Close 90 mm Φ	4X4 Close 120 mm Φ
Number of Array Quadrupole	16	16	16
Quadrupole Warm Bore (mm)	60	90	120
Type of Quadrupoles	Diamond	Diamond	Diamond
Induction at the Quadrupole Coil (T)	4.0	4.0	4.0
Min. Coil Radius (mm)	40	55	70
Quadrupole Strength (T m^{-1})	100.0	72.7	57.1
Quadrupole Magnetic Length (m)	0.363	0.50	0.636
Array Cold Length (m)	0.44	0.60	0.76
Cryostat Overall Length (m)	0.54	0.70	0.86
Array Diamond Side Length (m)	0.44	0.605	0.77
Cryostat Vacuum Can Outer Diameter (m)	0.675	0.85	1.065
Cryostat Height (m)	1.28	1.46	1.68
Cryostat Neck Thickness (m)	0.11	0.11	0.11
Quadrupole Array Cold Mass (kg)	150	350	670
Magnet Design Current (A)	1000	1000	1000
Quadrupole Array Stored Energy (kJ)	195	480	940
Quadrupole Array Self Inductance (H)	0.39	0.96	1.88
Heat Leak into Cryostat at 4.4 K (W)	0.47	0.56	0.68
Heat Leak into Cryostat 40 to 50 K (W)	7.0	10.6	15.4
Beam Current Factor (90 mm Bore Case = 1)	0.33	1.00	1.62
Cryostat Mass Factor (90 mm Bore Case =1)	0.43	1.00	1.91
Cooling Factor (90 mm Bore Case = 1	0.72	1.00	1.37

A cryostat can be built for loosely packed quadrupoles in the array where the quadrupoles are spaced apart with little magnetic coupling between quadrupoles. This type of array will have coils that are an approximation of a cosine two theta current distribution around the bore. The intersecting ellipse design is also possible in a loosely packed quadrupole array. A closely packed square or diamond quadrupole array can also be accommodated by the proposed cryostat as well.

A closely packed diamond or square array will have the fields from one quadrupole bore coupled with the field from adjacent quadrupoles. Quadrupoles that are closely coupled must have additional

-

windings on the outside of the array. A multiple layer superconducting shield can potentially be used to shield the induction linac from the stray field of the quadrupole array.

The cryostat design presented in this report assumes that the quadrupole coils are cooled by conduction. There are at least a couple of quadrupole designs that can be cooled by conduction through the coil package. However, there are a number of the magnet designs assume that the coils are immersed in liquid helium. This can be accommodated, but additional radial space inside the quadrupole bore has to be allotted and the helium in the bore must be connected to the refrigeration circuit in some way. In most cases, it is not necessary that liquid helium flow through the superconducting coils. (It is the high specific heat of the helium that contributes to overall coil stability not the heat transfer to the flowing helium.) The cryostat solutions proposed in this report will work for a wide variety of quadrupole arrays.

Some general comments about the quadrupole array cryostat are as follows: 1) A cryostat that meets the general criteria for being installation into an induction linac structure can be built. 2) There are at least two cold mass support systems that can be used for a quadrupole array cryostat. The simplest support system, the vertical support tube system, has the highest heat leak and takes the most longitudinal space. The tension strap support system will work as long as the cold mass has a diamond or square shape and it is inside of a cylindrical vacuum vessel. The heat leak down the cold mass support system is less than the radiation heat load through the multi-layer insulation. 3) The largest heat load into the cryostat is through the multi-layer insulation system. The radiation heat load through the quadrupole array insulation is dominated by the bore tubes for the ion beams. 4) High temperature superconducting leads combined with a source of helium gas from the refrigerator at 35 to 40 K will reduce the refrigeration needed to cool the quadrupole array. The same gas that cools the shield and cold mass support intercepts can be used to cool the upper gas cooled electrical leads. 5) The quadrupoles in the array are assumed to be hooked up in series. A magnet current of 1000 A was assumed, but the current can be increased to 1500 or 2000 A, if needed. 6) A quench protection system based on cold diodes and bypass resistors has been proposed. This quench protection system is completely passive and it results in all of the magnet stored energy being dumped at liquid helium temperature. As an alternative an external dump resistor can be used, but this type of quench protection system requires an active quench detection system. 7) Cryogenic pumps for the accelerator vacuum can be attached to the ends of the quadrupole array cryostat. Cooling for these cryogenic vacuum pumps can come from the superconducting quadrupole cooling system. Quadrupole Arrays with attached cryogenic pumps require fifty percent more refrigeration than quadrupole arrays without the attached vacuum cryogenic pumps. 8) The proposed quadrupole array cryostat can be scaled to include more or fewer quadrupoles in the array and array quadrupoles that have a varying warm bore size.

Acknowledgements

The author wishes to acknowledge the people who helped him develop the design concepts for the multiple bore quadrupole cryostat. Roger Bangerter of the Fusion Energy Research Program at LBNL provided the author with the basic design criteria for the cryostat and provided comments as the design progressed. Clyde Taylor and Shlomo Caspi of the LBNL superconducting magnet group provided me with comments concerning magnet designs that might be put in multiple bore magnet cryostats. The author benefited from discussions with Simon Yu during the preliminary design of a solenoid cryostat for an induction linac phase-rotation system for Fermilab.

This work was performed at the Lawrence Berkeley National Laboratory with the support of the Office of Science, United States Department of Energy under contract number DE-AC03-76SF00098.

-

List of References

The following list of references may be useful for those who want to look seriously at the design of a cryostat for a multiple bore quadrupole magnet system and the refrigeration system needed to cool a multiple bore quadrupole array.

[1] S. Caspi, R. Bangerter, et al, “Superconducting Quadrupole Magnet Array for a Heavy Ion Fusion Driver,” IEEE Transactions on Applied Superconductivity **9**, No. 2, p 463, (1999)

[2] R. B. Meinke, A. Faltons, and R. O. Bangerter, et al, Development of Quadrupole Arrays for Heavy-Ion Fusion,” IEEE Transactions on Applied Superconductivity **10**, No. 1, p 463, (2000)

[3] A. Faltons and E. Henestroza, “Current Distributions for Superconducting Quadrupole Arrays,” Lawrence Berkeley National Laboratory HIFAN-886a, (1997)

[4] Nicolai Martovetsky, Lawrence Livermore National Laboratory a private communication concerning diamond shaped quadrupole arrays for heavy ion fusion.

[5] I. Itoh, T. Sasaki, et al, “Magnetic Shielding Properties of Nb-Ti/Nb/Cu Multi-layer Composite Tubes,” IEEE Transactions on Applied Superconductivity **3**, No. 1, p 177, (1993)

[6] F. Kriesen, G. T. Danby, W. Meng, et al, “The Superconducting Inflector Dipole for the Muon g-2 Storage Ring,” IEEE Transactions on Applied Superconductivity **5**, No. 2, p 671, (1995)

[7] D. Evans, “Materials Technology for Magnet Insulation and Bonding,” to be published IEEE Transactions on Applied Superconductivity **10**, No. 1, p 1300, (2000)

[8] “Induction Linac Superconducting Solenoids For the Neutrino Factory Phase Rotation System,” LBNL-45288, March 2000

[9] E. P. Popov, Mechanics of Materials, Prentice-Hall Inc., Englewood Cliffs NJ, (1952)

[10] R. J. Roark and W. C. Young, Formulas for Stress and Strain, 5th Edition, McGraw Hill Book Company, New York, (1975)

[11] M. A. Green, “PEP-4, Large Thin Superconducting Solenoid Magnet, Cryogenic Support System Revisited,” Lawrence Berkeley Laboratory Engineering Note M5855, 1 March 1982

[12] S. T. Wang of Wang NMR, “Design of an RF Test Superconducting Magnet and Cold Shippable Cryostat for LBNL, response to P. O. 6480017, 25 August 1998

[13] "The role of Superconductor in Reducing the Refrigeration Needed to Cool the Leads of a Superconducting Magnet", Cryogenics **30**, No. 9, Supplement, p 679, (1990), LBL-28843

[14] M. A. Green et al, "Tests of a GM Cryocooler and High Tc Leads for the ALS Superbend Magnets," Advances in Cryogenic Engineering **45**, Plenum Press, New York, (1999)

[15] "Heat Transfer through a Multi-layer Insulation System as a Function of Pressure in the Cryostat Vacuum Space," Advances in Cryogenic Engineering **43**, p 1313, Plenum Press, (1997)

[16] M. A. Green, et al, "Forced Two-Phase Helium Cooling of Large Superconducting Magnets," Advances in Cryogenic Engineering **25**, p 420, Plenum Press, New York, (1979)

[17] F. Barrera et al., "Forced Two-Phase Cooling of the TPC Superconducting Solenoid", Advances in Cryogenic Engineering **29**, p 385, Plenum Press, New York, (1983)

[18] "A Design Method for Multi-tube Gas Cooled Electrical Leads for the g-2 Superconducting Magnets," co-authored with L. X. Jia, L. J. Addessi, J. R. Cullen Jr., A. J. Esper and R. E. Meier, Advances in Cryogenic Engineering **41**, p 573, Plenum Press, New York (1995)

[19] P. H. Eberhard et al, “Quenches in Large Superconducting Magnets,” Proceeding of the MT-6, Bratislava, Czechoslovakia, 29 Aug 1977 through 2 Sept. 1977, LBL-6718 (1977)

[20] C. Day, B. Kammerer and A. Mack, “Pumping Performance of Cryopanels Coated with Activated Carbon,” Advances in Cryogenic Engineering 43, p 1327, Plenum Press, (1997)

-

LBNL-46035
SCMAG-718

The Magnet Cryostats and the Cryogenic System for Multiple Bore Superconducting Quadrupoles Inside of an Induction Linac

Michael A. Green
Lawrence Berkeley National Laboratory
University of California
Berkeley CA 94720

June 2000

* This work was performed at the Lawrence Berkeley National Laboratory with the support of the Office of Science, United States Department of Energy under contract number DE-AC03-76SF00098

-

Table of Contents

Introduction 1
Superconducting Coil Design and Its Effect on the Cryostat 2
General Comments about the Quadrupole Array Cryostat 6
Quadrupole Array Cryostat Cold Mass Support System 8
Vertical Support Tube System 9
Tension Band Support System 15
Heat Flow into the Quadrupole Array Cryostat 19
Conduction Cooling of the Magnet Coils 22
Cooling the Quadrupole Array and Its Shields and Leads Using a Conventional J-T Refrigerator 23
The Magnet Current Leads 27
The Quadrupole Quench Protection System and Its Effect on Cooling 29
Cryogenic Vacuum Pumping for the Accelerator Vacuum 31
Magnet Scaling and Concluding Comments 35
Acknowledgements 37
List of References 38

-