Title
A REPORT ON THE THREE-DEE, THREE-PHASE 20-INCH CYCLOTRON

Permalink
https://escholarship.org/uc/item/6dh2d43m

Authors
Heusinkveld, M.
Jakobson, M.
Ruby, L.
et al.

Publication Date
1952-07-21

UCRL- 1889

~~SECRET~~
~~SECURITY INFORMATION~~

DECLASSIFIED

UNIVERSITY OF CALIFORNIA – BERKELEY

RADIATION LABORATORY

~~SECRET~~
~~SECURITY INFORMATION~~

DISCLAIMER

UNIVERSITY OF CALIFORNIA
Radiation Laboratory

Cover Sheet
Do not remove

INDEX NO. UCRL-1889
This document contains 45 pages
This is copy 5 of 10 series B

DECLASSIFIED

~~SECRET~~
Classification

Issued to ~~Declassification Offic~~
Information Division

Each person who receives this document must sign the cover sheet in the space below.

Route to	Noted by	Date	Route to	Noted by	Date

UCRL-1889
Technology-Materials Testing
Accelerator Distribution

~~SECRET~~
~~SECURITY INFORMATION~~

UNIVERSITY OF CALIFORNIA

Radiation Laboratory

Contract No. W-7405-eng-48

DECLASSIFIED

A REPORT ON THE THREE-DEE, THREE-PHASE 20-INCH CYCLOTRON

M. Heusinkveld, M. Jakobson, L. Ruby and B. T. Wright

July 21, 1952

~~SECRET~~
~~SECURITY INFORMATION~~

~~RESTRICTED DATA~~

~~This document contains restricted data defined in the Atomic Energy Act of 1946. Its transmittal or the disclosure of its contents in any manner to an unauthorized person is prohibited.~~

Berkeley, California

CLASSIFICATION CANCELLED
BY AUTHORITY OF THE DECLASSIFICATION BRANCH USAEC
BY
SIGNATURE OF THE PERSON MAKING THE CHANGE
3-15-57
DATE

Standard Distribution: Series A

	Copy No.
Atomic Energy Commission, Washington	1 - 4
California Research and Development Company	5 - 9
Carbide and Carbon Chemicals Company (ORNL)	10
Carbide and Carbon Chemicals Company (Y-12 Area)	11
Chicago Operations Office	12
Patent Branch, Washington	13
San Francisco Area Office	14 - 15
University of California Radiation Laboratory	16 - 20
Technical Information Service, Oak Ridge	21 - 35

Technology-Materials Testing
Accelerator Distribution

A REPORT ON THE THREE-DEE, THREE-PHASE 20-INCH CYCLOTRON

M. Heusinkveld, M. Jakobson, L. Ruby and B. T. Wright

Radiation Laboratory, Department of Physics
University of California, Berkeley, California

July 21, 1952

ABSTRACT

The three-dee, three-phase 20-inch cyclotron was constructed for the purpose of investigating (a) and the starting conditions of ions in a three-dee, three-phase accelerator, and (b) the problem of maintaining the correct phases between the dees. The 20-inch cyclotron has three dees which are 60° sections placed symmetrically in the tank. The rf system consists of a master oscillator and amplifier for each dee. The phases of the voltages on the dees are maintained at 120° with respect to each other by a phase control system. "Hunting" of the phase control system has been eliminated by neutralizing the inter-dee capacity with inductively coupled loops on the dee stems. The machine was designed for proton resonance with a magnetic field of 7.1 kilogauss. Steady operation has been maintained with dee voltages of 28 KV and a proton beam of 6.5 ma at 1 Mev. Peak operation was 8.5 ma of protons at 1 Mev. The beam was measured both by a current probe and calorimetrically. It is possible to program the beam out to two complete turns by means of slits on the dees. The gain in energy per turn is between 2.5 and 3 eV_0. Without changing the frequency of the electrical power supplied to the dees or changing the magnetic field, but by changing the phase sequence from ABC to ACB, 6 ma of deuterons have been accelerated to a full radius of 8-1/2 inches (0.5 Mev) with an energy gain per turn of ~5eVo.

TABLE OF CONTENTS

Page No.

DECLASSIFIED

~~SECRET~~
~~SECURITY INFORMATION~~

UCRL-1889
Technology-Materials Testing
Accelerator Distribution

A REPORT ON THE THREE-DEE, THREE-PHASE 20-INCH CYCLOTRON

M. Heusinkveld, M. Jakobson, L. Ruby and B. T. Wright

Radiation Laboratory, Department of Physics
University of California, Berkeley, California

July 21, 1952

I. INTRODUCTION

The reason for constructing the three dee, three phase cyclotron was to obtain information required for constructing a cyclotron of the Thomas type, in particular, to investigate the problems involved in starting the ions and the problem of maintaining the phase of the three dee voltages 120° with respect to each other. Although the source and starting geometries do not scale to a larger machine, the problems involved in starting the ions are essentially the same.

The 20-inch cyclotron was constructed in the summer of 1951, using the magnet available from the injector cyclotron of the one-quarter scale model bevatron. This magnet has a "C" type yoke, with 20-inch pole faces. The cyclotron was designed with three symmetrical 60° dees supported from foreshortened quarter-wave stems. The dees were to be operated three-phase, separated 120 electrical degrees. The rf system consists of a crystal controlled oscillator, frequency doubler, phase generator, buffers, drivers and final amplifiers. The rf system was to supply 37 kw of 11 mc/s rf power of which 22 kw was to be available for beam load. The machine was originally designed to accelerate 50 ma of protons to 440 Kev. (cf UCRL-1199 Rev.)

The purpose of the present report is to make available information obtained with this 20-inch cyclotron. Section II of this report describes the constructional details of the machine at the end of the operating period, incorporating all improvements made in the course of operation. The section is essentially a description of the machine, giving details of the magnet, tank, pumping systems, dees, rf system, phase control system, ion source, and beam measurement apparatus. Section III deals with the development and operation of the 20-inch, and is a condensed log of operations. Section IV summarizes the information obtained with the 20-inch, including starting conditions, phase control, and multiple modes of acceleration. The 20-inch cyclotron is a part of the project devoted to the development of a Thomas type cyclotron. The over all project is under the supervision of Professor R. L. Thornton.

II. CONSTRUCTIONAL DETAILS

Magnet

Yoke. The magnet was constructed with a "C" type yoke of laminated mild steel fillet welded. The weight of the yoke is 6-1/4 tons. The pole face is 20 inches in diameter with a 5-1/8 inch minimum gap. The yoke is vertical and the gap horizontal. The coils were designed to give a maximum field of 8 kilogauss for 10^5 ampere turns. The pole tips are removable and part of the tank of the machine. The pole tips were shimmed to provide magnetic focusing out to 8-1/2 inches. Figure 1 shows the pole tip shape.

Coils and Cooling System. The coils are placed symmetrically 15 inches above and below the center of the gap. Each coil comprises 7 layers of 57 turns each of 1/8 inch x 1 inch copper strap separated by 0.014 inch insulation. The total length of copper winding is 6700 ft/coil. The weight of each coil and pole tip is approximately 2 tons. The current density for maximum field (10^5 ampere turns) is 10^3 amp/cm^2 for the copper winding. Eight kilowatts of power at 125 amp. and 64 volts are required for the magnet. Cooling of the coils is provided by a silent vane blower. An airvane interlock prevents the generator from being energized unless sufficient airflow is present to cool the coils. In addition, the coils are protected from overheating by a thermocouple in the coils which shuts off the motor generator set if the temperature of the coils exceeds 90° C.

Current Generator and Controls. The necessary 8 kw of power for the magnet coils is supplied by a 90 kw generator located in a separate building some distance from the magnet. The control circuit comprises a Brown converter which compares the magnet current with a regulated standard. The converter chops up the comparison voltages into 60 cycle and provides a correction signal if the magnet current wanders from the correct value. The regulator should be constant to within 0.2 percent. In use, this accuracy was not obtained (~0.8 percent) and was attributed to the long lines between the control circuit and the generator.

Resultant Field. The resultant field was measured with a flip coil and its variation with radius is illustrated in Fig. 2. The azimuthal variation was small enough to be neglected.

Tank and Pumping System

Tank Construction. The tank is flat with hexagonal top and bottom. Figure.1 is a diagram of the tank. It is 10 inches high and 16-1/2 inches along a face. The sides of the tank are constructed of 2/3 inch thick mild steel. The top and bottom of the tank are 2-1/2 inch thick and serve as pole tips for the magnet. One side of the hexagonal chamber is parallel to the vertical section of the magnet yoke. This side is used for beam-measuring probes. Three of the other sides join onto the dee stem tanks, one joins onto the pump manifold, and the last one is used for the ion source. Each face is grooved for flat hycar gaskets which provide the vacuum seal. The source face plate has two 3-inch diameter observation ports covered with 1/2 inch lead glass. The tank volume (including the portion of the dee stems evacuated) is 65 cu. ft.

Pumping System. A 14-inch Distillation Products oil diffusion pump is used to evacuate the tank with two 110 cu. ft./min. DVD 8810 Kinneys for forepumps. The diffusion pump (untrapped) has a speed of 3000 liters/sec. at 7×10^{-4} mm. Hg. The diffusion pump requires 2.8 kw of power. It is primarily cooled by water cooling lines around the chimney. A freon refrigerated baffle is inserted in the chimney of the diffusion pump to reduce the amount of oil escaping into the tank. A Mercoid switch connected to the baffle rings an alarm if the temperature rises above -30° C.

Traps and Gauges. In addition to the freon baffles, two stainless steel liquid nitrogen traps are placed where the diffusion pump is attached to the tank. They each have a capacity of 1.4 liters of liquid N_2 and have 100 sq. in. exposed to vacuum. Western Electric ion gauges are used to measure the pressure in the tank. The gauges are mounted vertically and magnetically shielded to reduce warpage of the filament. It requires 4 minutes to reduce the pressure in the tank with the forepumps to 100μ and 4 minutes more to reduce the pressure to 3×10^{-5} mm with the diffusion pump. Base pressure in the tank is 1×10^{-6} mm Hg and operating pressure is 2×10^{-5} mm Hg with a leak rate of 5 cc/min of H_2 into the tank.

Dees and Dee Liners

Dees Proper. The three dees are identical and placed symmetrically around the tank. They have arbitrarily been called A, B and C. Each dee is a 60° sector attached to a foreshortened quarter wave stem. The vertical separation of the dee tips is two inches, and the dee-dee liner clearance is 1 inch. The dees project to within one inch of the center of the machine. The tips are demountable and can be changed to vary the center geometry. The tips are made of one-quarter inch thick copper. The remainder of the dee is made of 1/16 inch copper sheet with 1/4 inch copper tubing heliarced to the dees for cooling. Before the cyclotron was constructed, a mockup was made of one dee structure in order to study its tuning properties. As a result, a good estimate of the exciting power was available. From this model the shunt impedance Z_s of each dee was measured to be about $3 \times 10^5 \Omega$, and the unloaded Q of the tank to be about 5000. The dee to dee capacity is about $2 \mu\mu f$.

Dee Stems. The dee stems are water cooled, of L shape, 4 inches in diameter and supported along the upper half of the L by a zircon pedestal. This insulator provides the main mechanical support and the entrance to the tank for the dee stem. The inside of the dee stem is at atmospheric pressure and carries cooling tubes to the dee. Each dee is attached to the short horizontal section of an L. Coarse tuning is brought about by a movable ground plane at the top end of the dee stem, and fine tuning is accomplished by a 100-200$\mu\mu$f air capacitor attached to the dee stem at the point where power is coupled in from the transmission line. Additional lumped capacities at this point are often necessary.

Dee Liners. The dee liners are of 1/16 inch copper, water cooled with 1/4 inch tubing. The liners inside the tank are 60° sectors above and below the dees, projecting slightly beyond the dees. In back of the accelerating portion of the dees the liners completely surround the dee structure and extend up along the dee stems.

RF System

Oscillator, Phase Generator, Buffer, and Driver. Design of the original rf system was due principally to K. R. MacKenzie. The rf system consists of a 5.5 Mc/s crystal controlled oscillator, frequency doubler, phase generator, and finally a buffer, driver and final amplifier for each dee. The 11 megacycle signal from the doubler is sent to a phase generator, where the signal is split into three parts and sent on to the three power amplifier systems. The phase of the signal to the B amplifier is shifted by 120° with respect to the signal for the A amplifier, and the phase of the C signal is shifted 240 degrees. This phasing is accomplished by a variable L-R-C phase shift network, the correct phase being maintained by a phase control system to be described later in this report. The three signals from the phase generator are cabled to the three separate amplifier cages. In each cage a 2E26 buffer stage amplifier supplies the signal for a 4-250A driver. This driver in turn supplies power for the grid of the final amplifier.

Final Amplifiers. The final amplifiers are RCA-A2505 tetrodes. They have a directly heated cathode, maximum rating of 10 kw plate dissipation, maximum plate voltage of 6 kv and a maximum plate current of 4 amp. The tubes are cooled by a 350 cu. ft./min radar blower. The plate tank circuit consists of an inductance (1-1/2 turns of 3/4-inch silver plated copper tubing bent into a 7-inch diameter coil) in parallel with a 250 $\mu\mu$f vacuum capacitor. Figure 3 is a photograph of a final amplifier cage. The dc for the plate is parallel fed through a choke. Forty kw of dc is available for the final amplifiers from a three-phase full-wave mercury rectifier supply. The dc plate voltages and screen voltages are varied by an induction regulator. Approximately 30 kw of rf power is available from the A2505 tetrodes.

These tubes are protected by a rf-dc fault circuit. If the 11 megacycle rf fails to build up along with the dc applied to the plate, the difference voltage triggers a thyratron and removes the rf drive and plate voltage on the final amplifiers. After a short delay (variable in the range 1-30 sec) the system automatically recycles. Spark gaps are provided at both ends of the transmission lines to protect against voltage surges. Airvane interlocks prevent the tubes from operating unless a flow of air is present to provide cooling.

Transmission Lines. The final amplifiers are connected to the dee stems by half-wave length transmission lines. The outer conductors are of square cross section 13 inches on a side and are made of 1/32 inch copper sheet reinforced with 1/2 inch plywood. The inner conductors are copper tubing 1-1/2 inches in diameter, supported by Alsimag ceramic insulators. The ends of the insulators are protected from high voltage gradients by end caps. Ball gaps at the centers of the transmission lines prevent any large second harmonic voltages from building up.

Phase Control System

The phases of the voltages on the dees must be held at 120° relative to each other for proper acceleration of ions in a three-phase machine. This is accomplished by a phase control system developed by Bob H. Smith. The essentials of the circuitry are indicated in Fig. 4. The system consists of a local osciallator, a frequency converter, five audio preamplifiers, phase meters, dc amplifiers and servomotors. Three of the servomotors operate the dee stem capacitors and two motors change the variable resistors for the grid phase generator.

The relative phases are observable as Lissajous figures on oscilloscopes and on meters which indicate deviations from 120 degrees.

To monitor and control the phase of the voltage on one of the dees, for example, a signal is taken from a loop near the top of the stem, transmitted through an unterminated length of cable and applied to the phase comparing circuit. This circuit produces an error signal proportional to the deviation in phase of the applied signal from a 120° relationship to a reference rf voltage. This error signal energizes a servo motor and rotates the variable condenser at the dee stem, changing the angle of the input impedance of the dee system. This change of impedance angle changes the phase of the rf voltage at the dee with respect to the phase of the driving voltage.

In the phase-comparing circuit, the sample signal from the dee stem is heterodyned with a local oscillator signal of frequency 15 kc lower than 11 megacycles, and of low amplitude compared to the sample. The resulting beat signal has an amplitude dependent only upon that of the local oscillator, and a phase with respect to the reference, which has also been heterodyned down to 15 kc, the same as that of the original sample with respect to the original reference.

Using the phase of the voltage at the A dee as the reference, the phase of the voltage at the B dee is held at 120 degrees in the following way. When the two signals, equal in amplitude after the conversion to 15 kc, are added (120° in phase), the amplitude of the resultant will be equal to that of either signal. If the angle is $> 120°$, the resultant will be less than either signal, while if the angle is $< 120°$, the resultant will be greater than either signal. This difference is then amplified as the correction signal. The circuitry as well as a more complete description of the system is given in UCRL-1884 by Bob H. Smith.

Grid Phase Control (Phase Generator). A signal from the grid of B final amplifier is compared with a signal from the grid of A by a phase meter. The resultant signal is sent to a variable resistor in a LRC network and keeps the relative phase 120 degrees. Similarly A-C grids are held at 240 degrees.

Plate Phase Controls (Dee Stem Capacitors). The A amplifier A2505 is kept at maximum efficiency by an efficiency phase control which keeps the plate voltage 180° in phase from the grid voltage. If the dee capacitance changes causing the phase to differ from 180°, a signal is sent to the motor on the dee stem capacitor which retunes the dee until the phase is 180°. B dee is connected to A dee by a phase control and is kept at 120 degrees. Similarly C dee is held 240 degrees from A dee. Since the grids A-B and A-C are phased at 120° and 240° respectively, B and C amplifiers should operate at maximum efficiency also.

Neutralizing Lines. It was found that the capacitance between the dees was large enough to cause considerable coupling between them. For some conditions of tuning, when power was supplied to only one of the dees, voltages would appear on the other dees of amplitude greater than that on the driven dee. Since the capacitances between the dees were unequal because of the presence of the ion source structure, an asymmetrical distribution of phases and amplitudes at the dees resulted such that in some cases a 0-120-240 degree phase relationship with equal amplitudes could not be obtained even by varying the power inputs from maximum to zero in any combination.

Another difficulty accentuated by the inter-dee capacity was overcompensation or "hunting" among the phase servo systems. Even though each servo loop could be made stable by itself, simultaneous operation of all loops with considerable coupling among them created an instability which was difficult to eliminate.

A solution to these two difficulties was found by using "neutralizing lines". Analagous to the neutralizing circuits used in connection with electron tube amplifiers, reactive power is transmitted among the dees of such phases and amplitudes as to exactly cancel the reactive power transmitted by the inter-dee capacities.

These neutralizing lines consist of short transmission lines between each pair of dees, loop coupled at the stems near the input points, as shown in Figs. 5 and 6. These loops can be rotated to vary the amount of coupling. Adjustment is made by exciting only A dee and varying the coupling in the respective neutralizing lines such that the voltages induced on B and C are less than 5 percent of that on A. Similarly the adjustment is carried out with B and with C excited. With the loops correctly adjusted the effect of the dee-to-dee capacity is reduced to the extent that hunting has ceased to be a problem and the amplitudes of the voltages on the dees can be controlled independently by varying their respective power inputs.

Ion Source

Source and Accelerating Slits. During the course of operation of the machine, the type of source and source geometry were varied considerably. The source giving the largest beam was similar to one developed at Oak Ridge for their 22-inch and 86-inch machines. Figures 7 and 8 are photographs of the source. The source is made of carbon with a quartz insulator isolating the top carbon reflector. The cylindrical chamber containing the discharge plasma is 2 inches long and 1/4 inch in diameter. The ions, electrons and gas stream up from the arc box through a 1/8 inch diameter hole tangent to one edge of the carbon cylinder. The accelerating slot is 1/8 inch x 3/4 inch.

The outside diameter of the source is 3/8 inch. A curved accelerating slit to pull the ions from the plasma is attached to B dee. Figure 9 is a photograph of the dee tips showing the accelerating slit attached to B dee. The slit is 1/2 inch wide, 2 inches high, with edge posts 1/8 inch in diameter and curved 1/16 inch in 2 inches. The slit is attached by a screw to the lower dee tip only. If the slit were attached to both dee tips, the expansion due to heating of the copper would fracture the slit.

Measurements of the relative yield of H_2^+ to H^+ from the source indicate that the ratio of H_2^+/H^+ is about 0.2 for arc currents of 3 amp. and arc voltages of 130 v.

The slit and source are located 1-1/2 inches from the center of the machine with the source 1/8 inch from the accelerating slit. The beam is quite sensitive to the position of the source with respect to the accelerating slit.

The source is located in a water cooled arc box. An Araldite molding insulates the filament leads from the arc box. Two water squirt tubes serve as filament leads through the araldyte molding. The outside of the araldyte molding is sealed with an "O" ring vacuum seal. A 3-inch chevron seal allows the position of the source to be changed radially and rotated. Sideways and vertical motion are allowed by a sylphon bellows. Figure 10 is a photograph of the source face plate.

<u>Filament, Filament Supply, Arc Supply and Emission Control</u>. The source of electrons for the arc is provided by a 125 mil "V" shaped tungsten filament. The V is mounted horizontally with the apex of the V directly below the hole in the source. The filament is heated with a 12v-600 amp. selenium rectifier supply. The arc voltage is supplied by a three-phase full wave mercury rectifier supply. Normal arc voltage is 150v at 3 amp. The arc current is stabilized by varying the emission from the filament. The emission is controlled by saturable reactors in the primary legs of the selenium

rectifier supply. The arc current provides a signal which is amplified and used to vary the amount of satuaration of the reactors as is required to keep the arc current constant. A 0-10 Ω variable resistor was inserted in the arc current return to change the arc from a negative resistance characteristic to one more favorable for regulation. This control system is quite satisfactory except for extreme conditions of small gas intake.

<u>Palladium Leak</u>. The inflow of hydrogen is controlled by a palladium leak, as shown by Fig. 11. A 5 mil thick, 1/4 inch diameter palladium tube, 5 inches long, filled with ceramic beads provides the barrier. One end of the tube is closed and attached to a 60-cycle low voltage power supply, and the other end is soldered to a tube evacuated by the system. The Pd tube is sealed in a container into which hydrogen is allowed to flow. The amount of hydrogen diffusing through the palladium is dependent upon the pressure of the hydrogen and the temperature of the tube. The flow rate of hydrogen through a barrier is given by:

$$F = \frac{k}{d}\sqrt{PT}\;e^{-E/RT}$$

where
F = rate of diffusion
T = temperature of palladium
P = pressure of hydrogen
d = thickness of palladium
E = heat of diffusion (4000-5000 cal/gm atom)
k = constant

The Pd leak was quite satisfactory for all operation. Care must be taken to avoid heating the tube unless hydrogen is present around the tube, or excessive heating will result and the tube will puncture.

<u>Beam Measurement</u>

<u>Current Probe</u>. A water cooled copper probe was used to intercept the beam. The probe was mounted on a squirt tube sliding through a 3/4-inch

chevron seal, insulated from ground by a bakelite insulator. Figure 12 is a photograph of the probe used. The probe was a 3/4 inch x 3 inch x 3 inch copper block milled hollow. The open face was covered by copper sheet and silver soldered. A squirt tube was silver soldered into the copper block to insure a rapid water flow directly behind the place where the beam struck. Horizontal fins projected one-quarter inch outward from the top and bottom of the probe to trap any secondary electrons spiralling along the magnetic field. A bias voltage of +450 v was also applied to reduce secondary emission. A condenser was used to bypass to ground the rf voltages induced on the probe in order to protect the beam measuring meter. The water flowing through the beam probe was sent through a calibrated Ratosight flow meter. Thermometers were inserted in the lines near the probe to give the temperature rise of the water. At beam levels of 1-2 ma at 1 Mev the current measured calorimetrically would be approximately 90 percent of the current meter reading. At beam levels of 6-8 ma the calorimetric measurement would give only 75 percent of the current meter reading. This difference was attributed to a non equilibrium condition, heat loss in the lines before reaching the thermometers and water boiling and bubbling in the probe at high beam levels. Also lower energy components of the beam may have come in with the increased dee voltages.

Radiation Level. The two observation ports in the tank were originally covered with lucite. At proton beam levels of 2 ma and 1 Mev, the x-ray level was about 150 mr/hour within one foot of the ports. The lucite windows were replaced with one-half inch thick lead glass which reduced the x-ray level to a negligible amount. In addition to the lead glass, dark glass had to be used to remove the glare from the glowing probe.

As long as hydrogen was used in the ion source, the neutron flux was negligible. When deuterium was accelerated in the machine and a beam of 6 ma at 0.5 Mev obtained, the fast neutron flux was of the order of 600 n/cm^2 sec within five feet of the machine. No concrete or water shielding was present around the machine.

III. DEVELOPMENT AND OPERATION OF THE 20-INCH CYCLOTRON

First Beam

The original design of the 20-inch cyclotron was somewhat different from the final result described in Section II. The phasing of the B and C grids was achieved by delay lines of length $\lambda/3$ and $2/3\lambda$ in place of the phase generator. The final amplifiers were Eimac 4W20,000A instead of RCA-A2505's. The Eimac tubes are water cooled 20 kw tetrodes with an indirectly heated (bombarded) cathode. The original phase control system compared the phase of B stem with respect to A and corrected the B stem tuning capacitor, also, of C stem with respect to A and corrected the C stem tuning capacitor. Shortly after initial operation, the A amplifier efficiency servo was added. The neutralizing lines were absent. The source was of an on-center open arc type.

Upon first tuning the rf system, it was noticed that vibrations of the dees, reflected in the observed phase relations, would make servoing very difficult. Several steps were taken, among which were stiffening braces inside the dees, sylphon bellows in the forepump lines, and shockmounting of several air-blowers. These reduced the vibration problem to where it was not of any further consequence.

Another effect observed with the first tune up was the presence of considerable capacitative coupling between dees. When only one dee was excited, the other two would often develop comparable induced voltages. Also, the servo system hunted badly and was generally unstable. In order to decouple the system a radial shield was built between each dee, but this seemed to make no significant improvement, so a shield was made to surround each dee and of such vertical height that the top of one dee could not see the top of any other, and similarly for the bottom. This reduced the coupling to a tolerable level.

Some previous work had been done on developing an ion source which would be particularly suited to a three dee, three phase geometry. Among those which were ready to be tried were an open arc, a shielded arc with one to three slits to permit extraction of the ions, and a ring-shaped open arc with a grounded post in the center. Also, some schemes for adding dc acceleration were tested. In every case the ion source was placed at the center of the cyclotron.

Change of Final Amplifiers to RCA-A2505's

For a long period, difficulty was experienced with the final amplifier stage. Perhaps a dozen or more separate failures occurred in the Eimac 4W 20,000A tubes, among which were grid-cathode shorts, filament-cathode shorts, open filaments, and cracked seals. Protection on these tubes consisted of current overloads in all power supplies and ball gaps at the input to the transmission lines. One or two hours was the usual operating time between tube failures. It was finally concluded that these tubes were poorly suited for this purpose and they were replaced by the 10 kw RCA-A2505. This eliminated all water cooling at the amplifiers and any need for the cathode bombardment supplies. Since the conversion, there has been 9 months of operation with but two failures of final amplifier tubes, one a grid-cathode short, and one of unknown cause. One of these tubes was replaced by an RCA-6166, which is the production model of the RCA-A2505, with equivalent performance. Some difficulty was experienced at first with the final amplifier stage breaking into oscillation, but this was remedied with neutralization. Also, at the time of the conversion, additional protection was added in the form of an rf-dc interlock which compares the rf on each dee with the plate voltage and removes the excitation and dc from all three amplifiers if any one dee voltage fails to build up initially or drops out during operation.

Further developments of the rf system have been dictated by problems which have arisen in studies of starting conditions and beam characteristics. It was found that the efficiency of the B and C power amplifiers decreased with time due to detuning of the grid circuits. An attempt was made to make all three servo loops into efficiency servos across the amplifiers but peak efficiency did not correspond to 120° phase difference between the dees. The solution to this problem was to replace the delay lines by a phase generator which could be servoed to maintain the proper phase relations between the final amplifier grids.

Neutralizing Lines Added

The amount of inter-dee coupling and consequent instability in the servo system was very sensitive to either removing any part of the dee shields or changing the size of the dee tips. Some improvement was secured by adding a variable speed of response to the servos in the form of an adjustable coupling pulley system between the servo motors and dee turing capacitors. However, the problem was effectively solved only when a neutralizing system was installed. This involved a set of inductively coupled transmission lines between each dee stem. The coupling loop on one end of each transmission line is rotated by a motor controlled from the console. By exciting one dee only and adjusting the neutralizing loops, the voltage appearing on either of the other dees can be reduced to less than 5 percent. The process is then repeated by exciting only the second dee and further adjusting. When the third dee alone is excited, it is found that the system is already neutralized, i.e., no induced voltages appear, and this is used as a check. The entire operation must be done at atmospheric pressure to prevent small induced voltages from being obscured by ion-lock. It takes about 45 minutes to let the cyclotron down to nitrogen, neutralize, and pump down again. This would be impractical on a large machine and a new method for neutralizing is now being designed.

At times there was considerable sparking and it was repeatedly necessary to restore the excitation which was removed by the rf-dc fault circuit. Hence, a recycler was added which would do this automatically, after a time delay which could be set by the operator. Recycling would often be repeated continuously requiring several attempts before the rf came on, especially if the voltage was high, and it was found that during this period the servos received spurious signals and tended to creep away. So, an additional time delay was added, also adjustable, which would deactivate the servos during the recycling periods and until the rf had been on a short while.

At high beam levels, the servos picked up, in addition to the rf signal, a large quantity of "arc hash". This "hash" has considerable audio component and rendered the servos inoperable. A special filter network added to the servo amplifiers was necessary to eliminate this interference.

Settings of the tuning capacitors are quite different for operating with high beams and operating with no beam (due to change of capacity with heating of the dees), so that shutting down after having the beam on requires retuning before the rf can be made to come on again. A device to do this automatically is now being designed.

Further details of the rf system are to be found in the report UCRL-1884 by B. H. Smith.

Multiple Modes

Early in the program a study was made of the properties of three dee cyclotrons to accelerate various ions. One rather obvious result is that H^+ and H^- are not accelerated simultaneously due to the unique direction of the rf phase sequence. The analysis also showed (cf. UCRL-1686) that almost all ions whose ratio of mass to charge is an interger, can be accelerated in one of the possible arrangements of the rf phase sequence, i.e., positive, negative, or zero sequence, with no change in the proton resonant rf frequency or magnetic field. The energy gain per turn with 60° dees, based on a delta function voltage change across the gap, is either 3 ev or 5.2 ev in the positive and negative sequence mode and 6 ev in the zero sequence mode. The theory has been carried out, in addition, for the general case of dees of arbitrary angular width.

Some experimental work has been done with acceleration of H_2^+ and D^+. As an example, with a proton resonant magnetic field and frequency and a deuterium source, the D^+ beam in the negative sequence mode was 6.5 ma at 8-1/2 inch radius while the beam recorded in the positive sequence mode, presumable D_2^+, under the same conditions was 30 μa. Neutron background was too high to undertake an extensive program with deuterium.

Change of Source Geometry

Open Arc (Centered). Of the arc sources previously described, operating on center, the open arc gave considerably more beam than any of the others, peak performance being 3.2 ma at 8 inches for protons. Curves of beam versus radius of current probe showed a gradual rise in beam with decreasing radius until four or five inches where the increase became much more rapid, continuing so toward the center. See Fig. 13. An attempt was made to improve the magnetic focusing of the beam at the center by adding cones, 2 inches in diameter and 1/2 inch high, to the poles. These raised the central field by four percent, but had no effect on the beam at large radii. The arc was always observed to diffuse when the rf voltage was turned on. Also, unless the arc was kept slightly shorter than the vertical gap between top and bottom of the dees, the tips of the dees, at 3/4 inch radius for the best beam, would become red hot. A view of the machine in this period of development may be seen in Fig. 14.

Ion Pump Type Source (Centered). It was suggested to us by Dr. E. O. Lawrence that using the experience gained with ion pumps at this laboratory, it should be possible to build a cyclotron ion source which would be an extremely efficient ionizer with a large arc surface. Fortunately a 5-inch removable plug extended through the center of the upper pole. Magnetic measurements showed that it would be necessary to augment the field inside the pole with a solenoid in order to strike an arc. When this was done it was possible to strike a 17-inch arc, 1/2 inch in diameter in the tank, of which a vertical piece 1/2 inch long was exposed in the median plane. The source acted like a pump, that is, when the arc was shut off the pressure increased up to a factor of two. No more beam was observed with this source than was reported previously for an open arc source. A view of this source in the machine is shown in Fig. 15.

Hooded Arc Off Center. Through advice from the cyclotron group at Oak Ridge, the ion source was moved to a radius of 1-3/4 inches and adjacent to one dee. A hood patterned after an Oak Ridge design was used over the arc. Considerable work was done to find a good injection radius, source, and dee slit design. With the geometry as shown in Fig. 16, it is typical to have between 6 and 7 ma at 8 inches radius. This current does not change with 450 volts of dc positive bias on the probe. However, when the current probe is moved in to 6 inches, the beam begins to increase rapidly and is lowered by positive bias on the probe indicating some loss of electrons by secondary emission. The beam is a linear function of the dc input power, of which about 40 kw is available, and also of the rf voltage, of which up to about 30 kv is held when loaded. Figure 17 is a plot of the beam as a function of the dee voltage.

After about 8 months of operation, the deposit of cracked oil on the dees and inside the tank had increased to such an extent that it became difficult to hold full voltage on the dees. A glow discharge would occur in the tank. The liners, dees and probe were then removed and sand blasted to remove the deposit. This eliminated the glow discharge in the tank.

Programming the Beam

It has been possible to program the beam for two complete turns by putting graphite slits on the dees. No decrease in the beam at large radii was observed. The first turn passes over the center of the cyclotron and misses one dee entirely, then comes around and skirts the ion source. The programming slits run cool only through a narrow range of rf voltage. Figure 18 is a plot of the ion paths for the first two turns.

Unfinished Experiments

One of the questions still unanswered at the end of the operating period is that of the effect of the beam coupling on the phase of the dee voltages. The resistive component of the beam load will reduce the Q of the tank and reduce the problem of phase control, since low Q circuits are easier to control than high Q circuits. The effect of the reactive component of the beam is more obscure and difficult to predict. The operation of the machine has indicated no effect other than the phases appear slightly more stable with the beam on than off. This would indicate either the reactive component is negligible for beam levels of the 20-inch, or that it is not detrimental.

The difficulty associated with neutralizing with the tank at air has been described above. An alternate method which has been suggested but not completed would be to neutralize under vacuum at high voltages. This would be done by modulating the 2E26 buffer plate on one dee with 60 cycles a.c., and then adjusting the neutralization until the 60 cycle component on the other two dees would be a minimum. This would be done successively for the other two dees.

IV. SUMMARY OF INFORMATION OBTAINED WITH THE 20-INCH CYCLOTRON

A hooded arc operated 1-1/2 inches off center has provided the most beam with a minimum of rf power lost in defocused beam. A curved accelerating slit to pull out the ions is attached to B dee. The hood helps to shield portions of the plasma from the rf fields. Off-center operation provided a better focusing geometry for the starting ions. The first few turns in the cyclotron are discrete and off center about 3/4 inch. They can be made to pass through accelerating slits on the dees with negligible loss in beam.

A phase control system has been necessary for satisfactory operation. In addition, in order to operate the cyclotron with no hunting of the phase control system, and equal dee voltages, it has been necessary to neutralize the dee-to-dee capacity. Even with the neutralizing lines, there is a slight asymmetry in the dee voltages due to the fact the accelerating slit for the source is attached to B dee. As a result B amplifier is more heavily loaded. With a larger machine, this extra load should have less effect.

Stable operation has been maintained with 6 ma of 1 Mev protons for dee voltages of 28 kv. From the programmed orbits the gain in energy per turn has been found to be about 2.5 eVo. By changing the phase sequence from ABC to ACB and using deuterium gas in the source, 6.5 ma of 0.5 Mev deuterons have been obtained. Similarly, using helium gas in the source, 1.5 ma of 1 Mev alpha particles were obtained. The gain in energy per turn for this mode is approximately 5 eVo.

~~SECRET~~

~~SECURITY INFORMATION~~

DECLASSIFIED

Information Division
7/24/52 bw

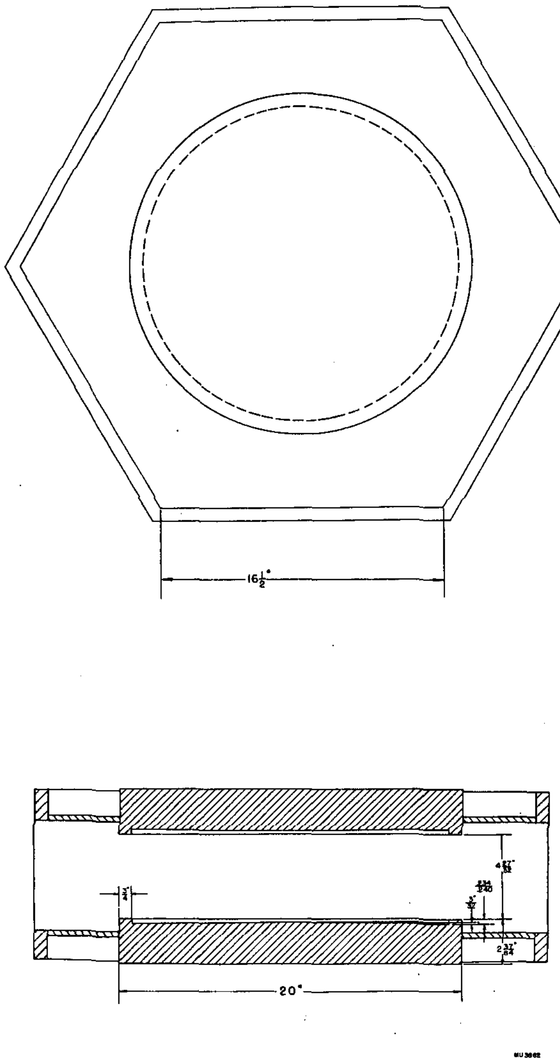

20" CYCLOTRON TANK

Fig. 1

Diagram of tank and pole tips.

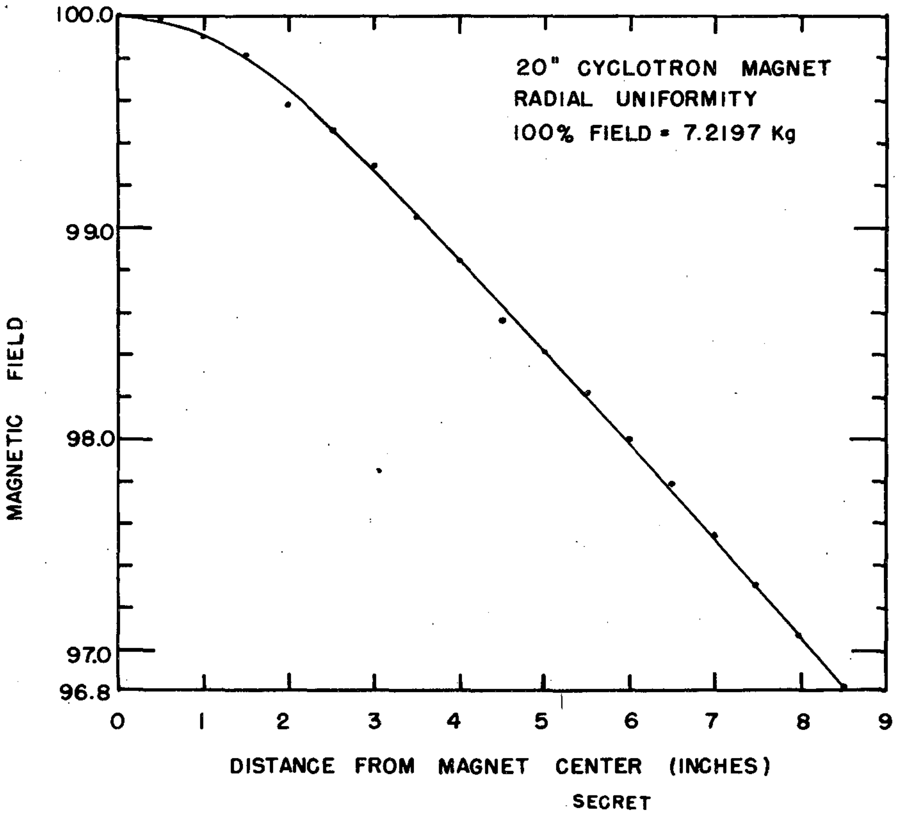

Fig. 2

Plot of magnetic field as a
function of radius.

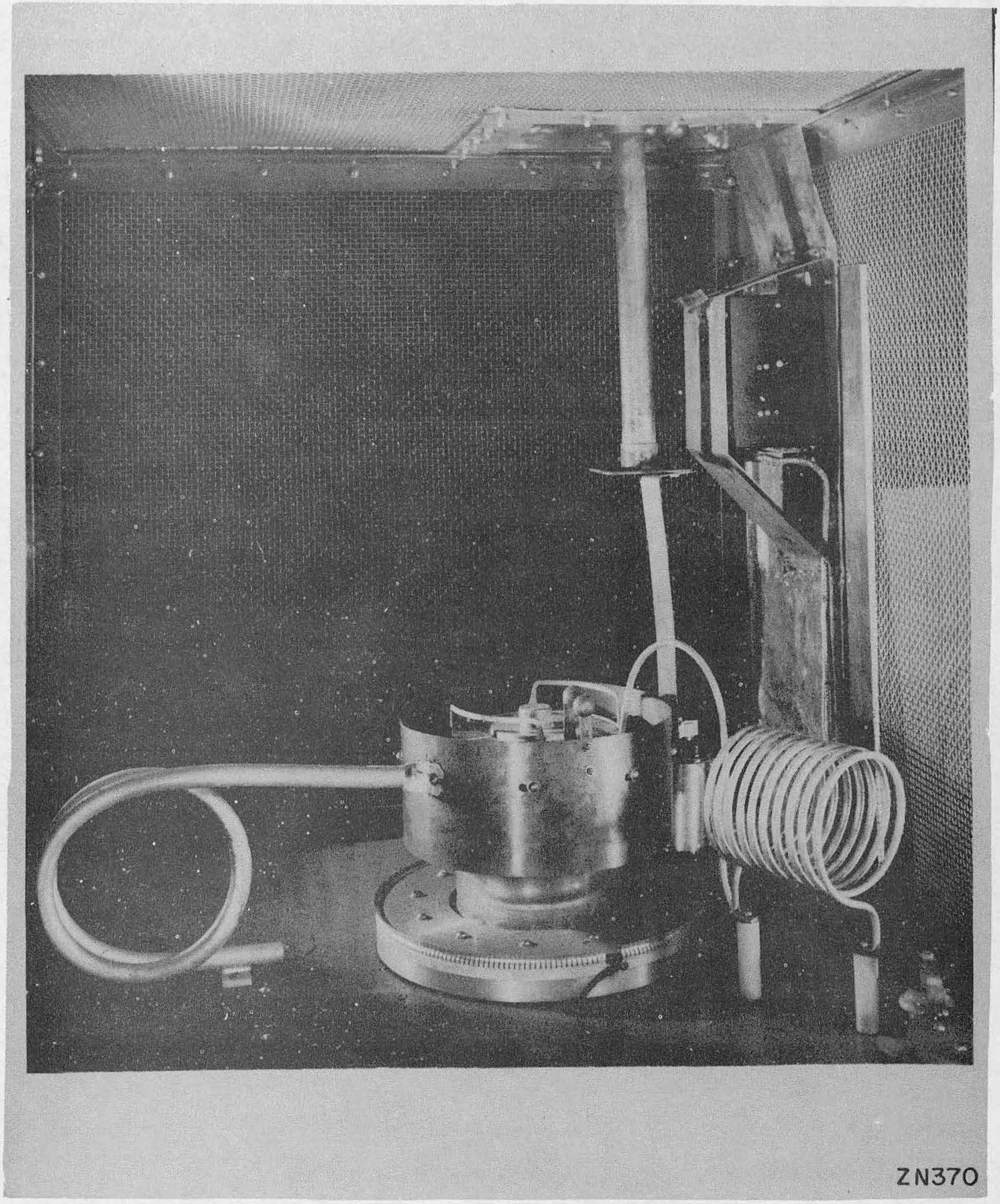

Fig. 3

Photograph of final amplifier
cage.

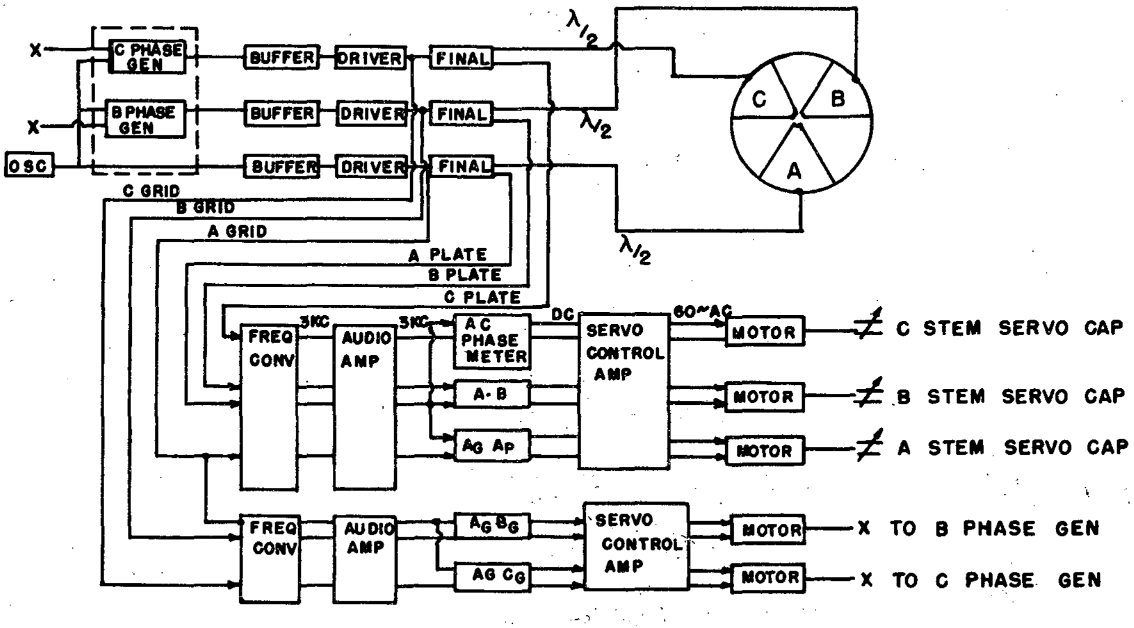

SECRET

MU3865

Fig. 4

Block diagram of phase control system.

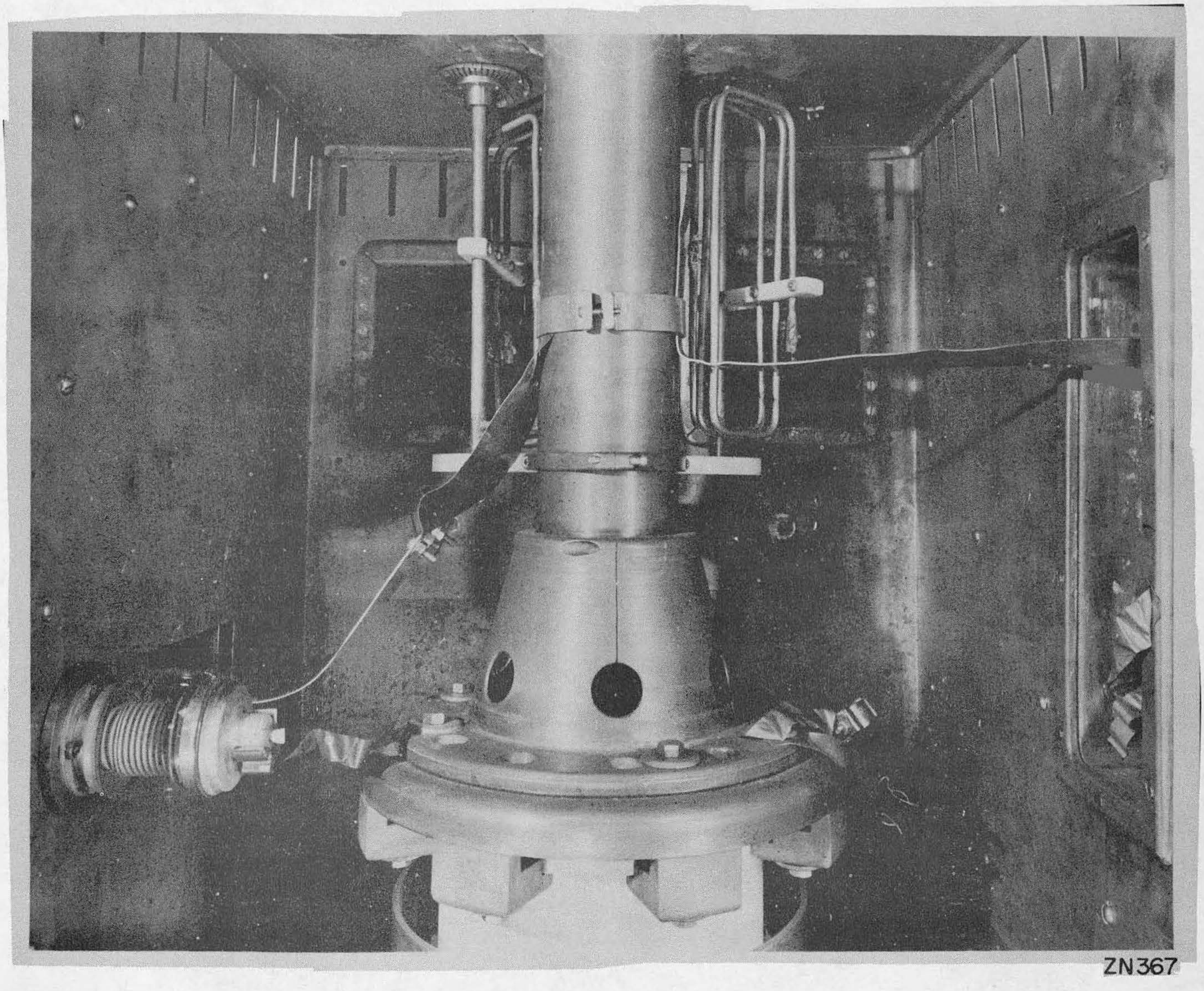

Fig. 5

Photograph of upper dee stem.

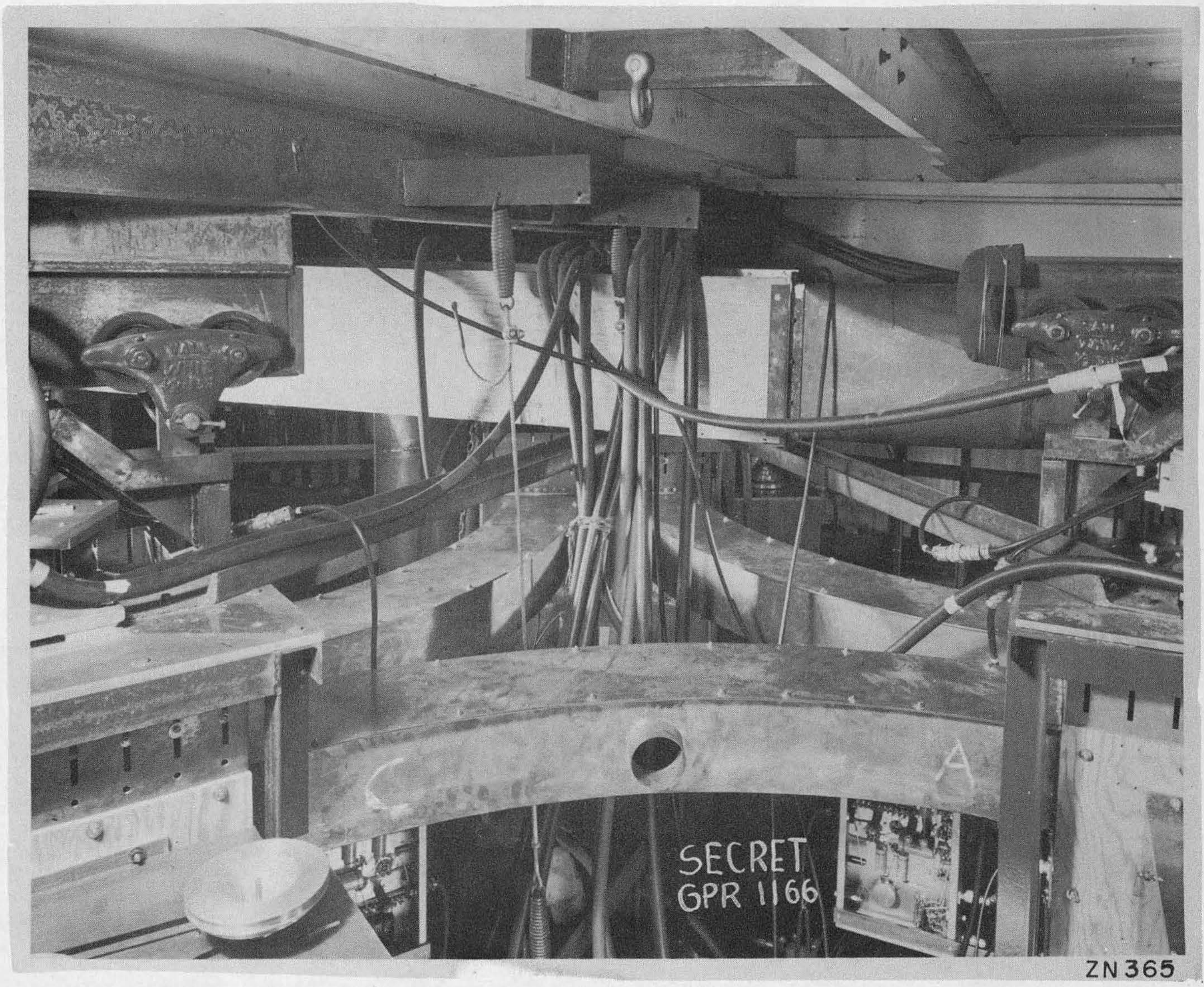

Fig. 6

Photograph of exterior of neutralizing lines.

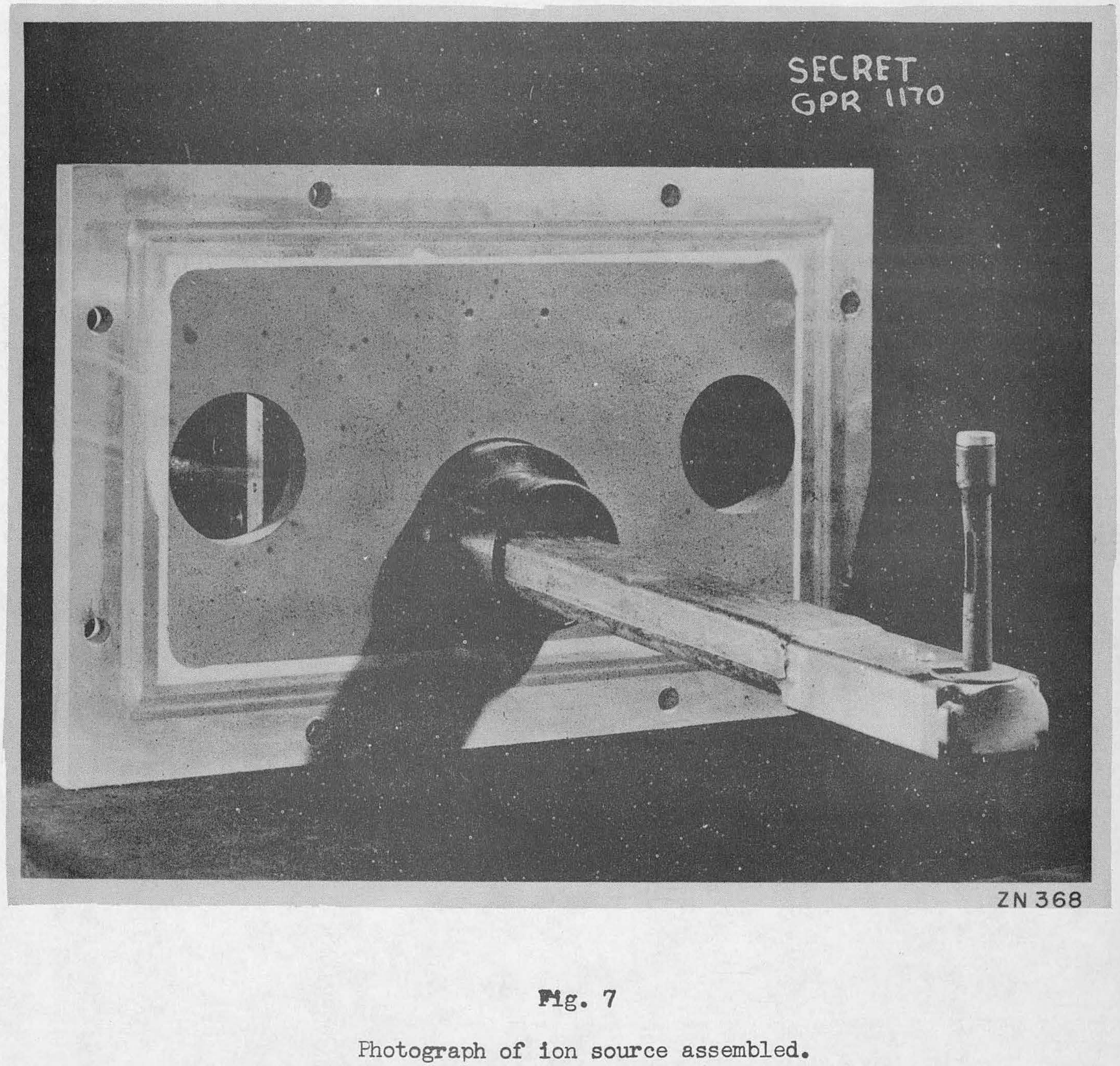

Fig. 7

Photograph of ion source assembled.

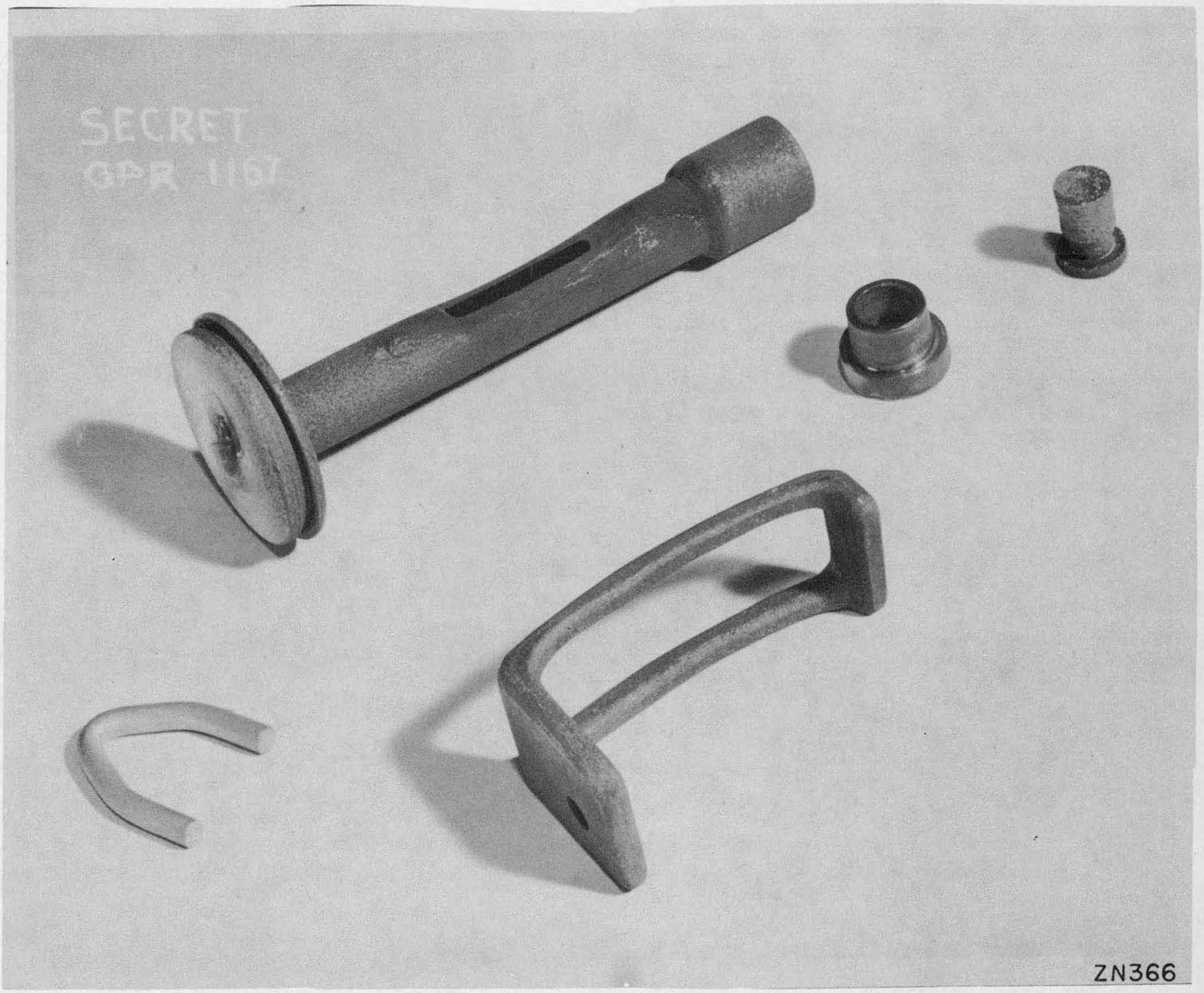

Fig. 8

Photograph of ion source disassembled.

Fig. 9

Photograph of dee tips.

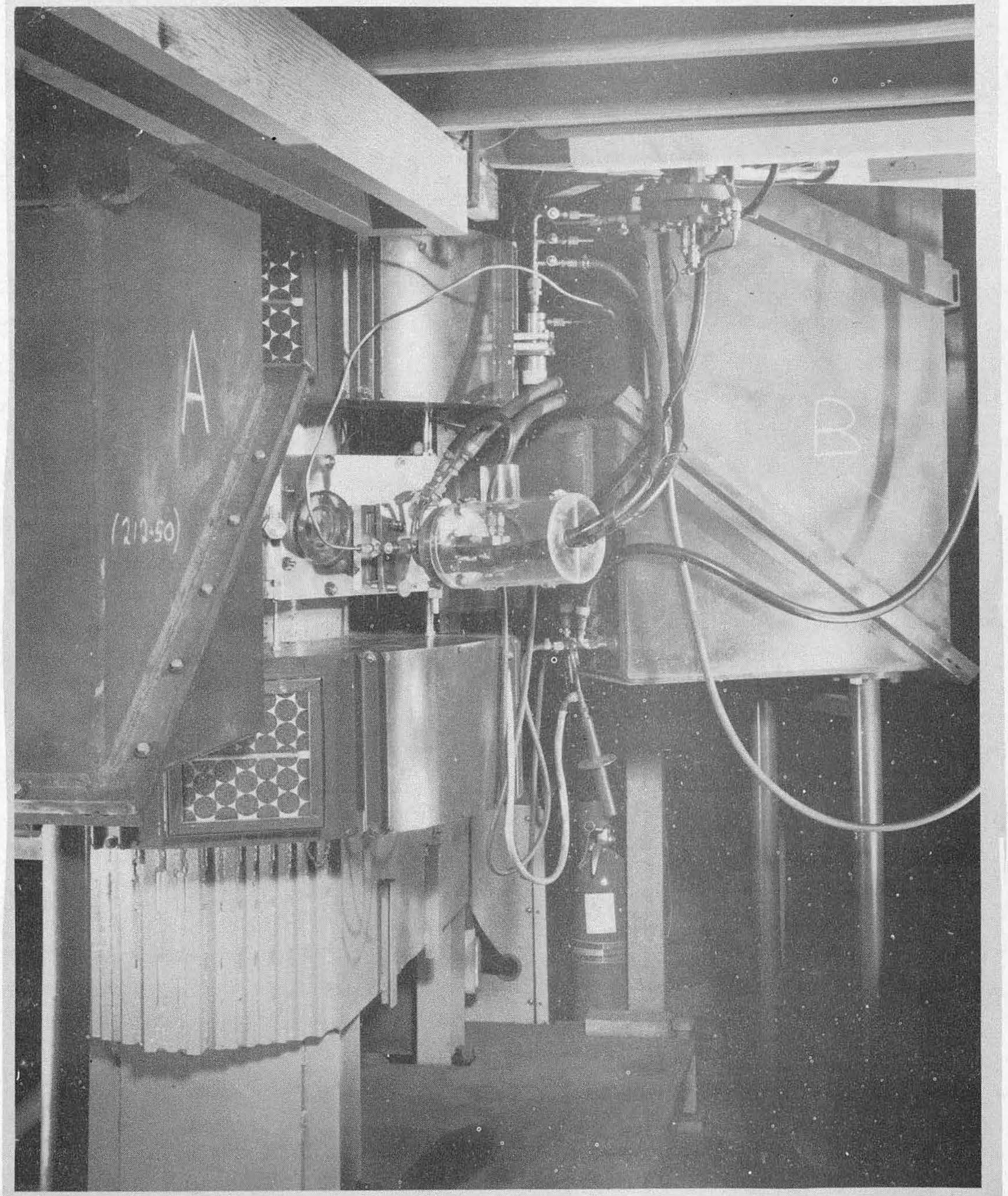

ZN369

Fig. 10

Photograph of source face plate.

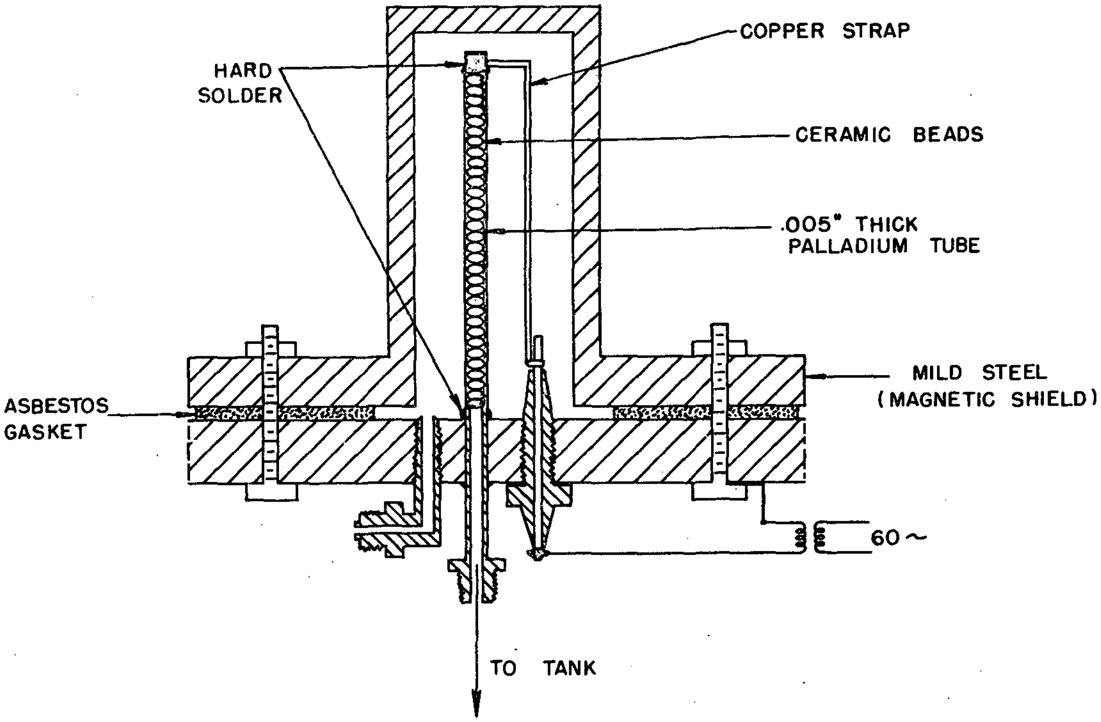

PALLADIUM LEAK

SECRET MU 3864

Fig. 11

Diagram of palladium leak.

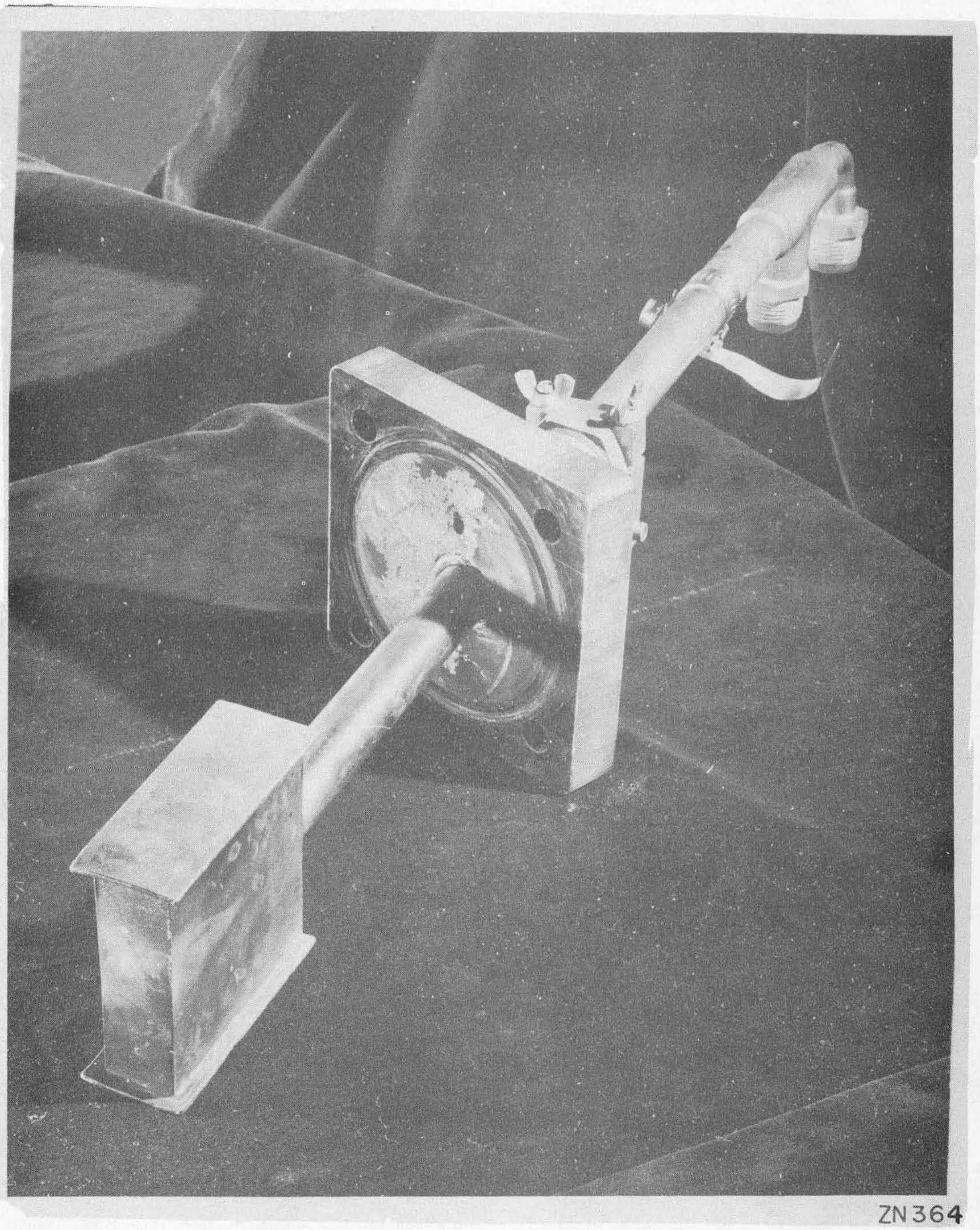

Fig. 12

Photograph of beam probe.

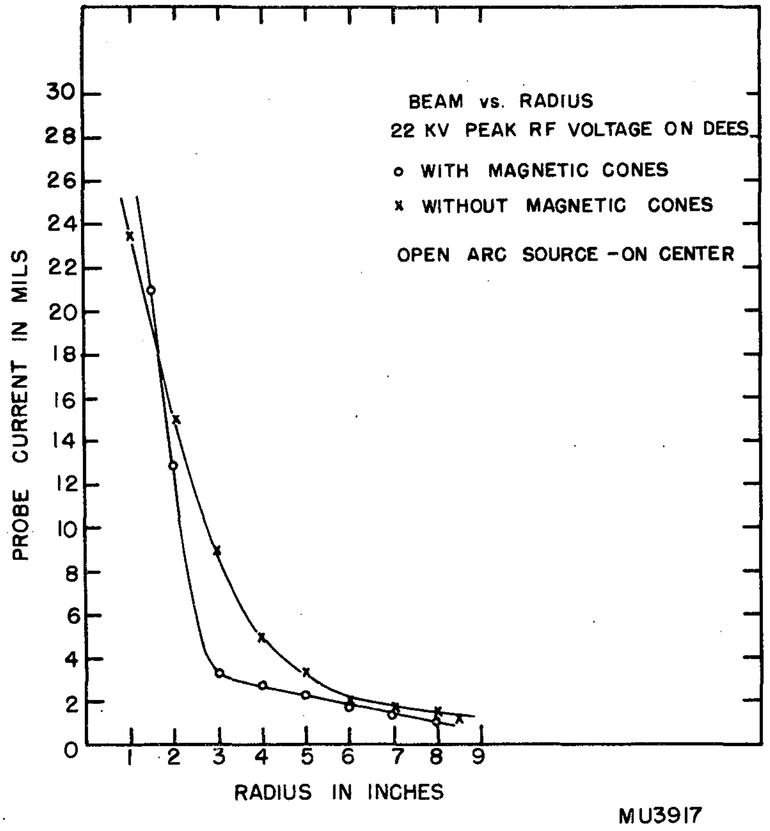

Fig. 13

Plot of beam as a function of radius.

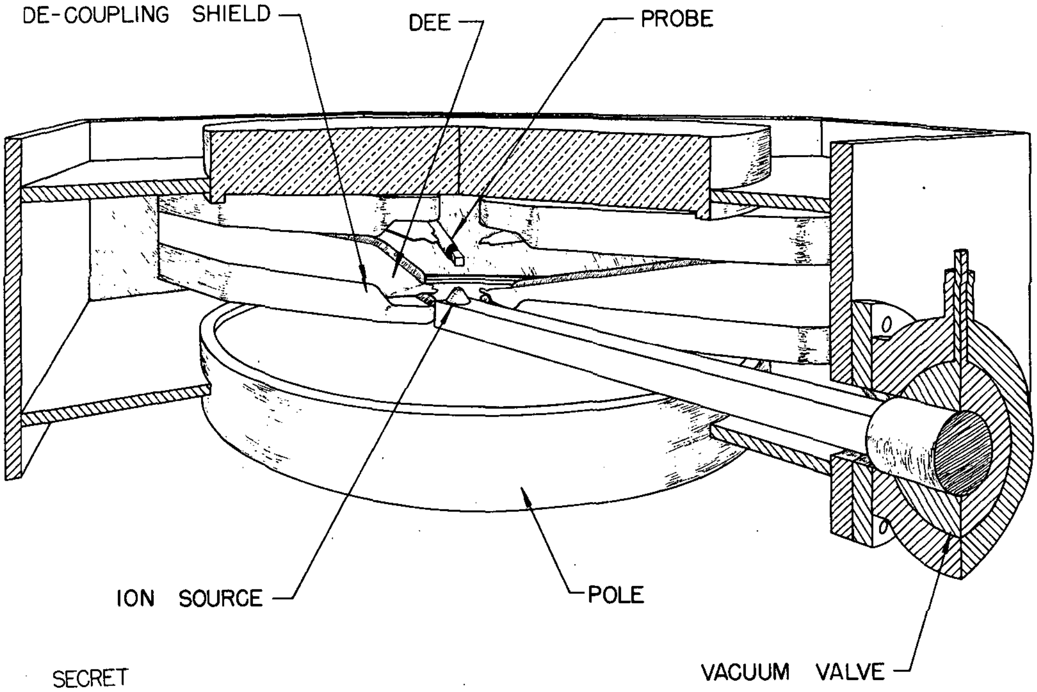

THREE "DEE", TWENTY INCH CYCLOTRON

Fig. 14

Diagram of dee structure with on center open arc source.

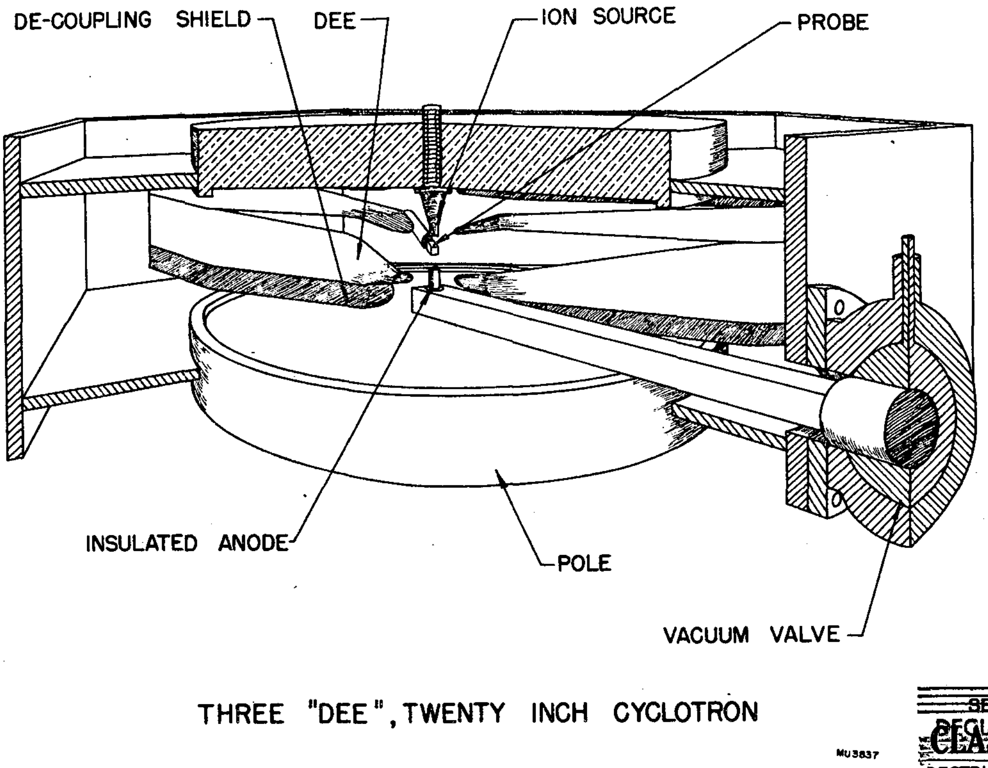

Fig. 15

Diagram of ion pump source.

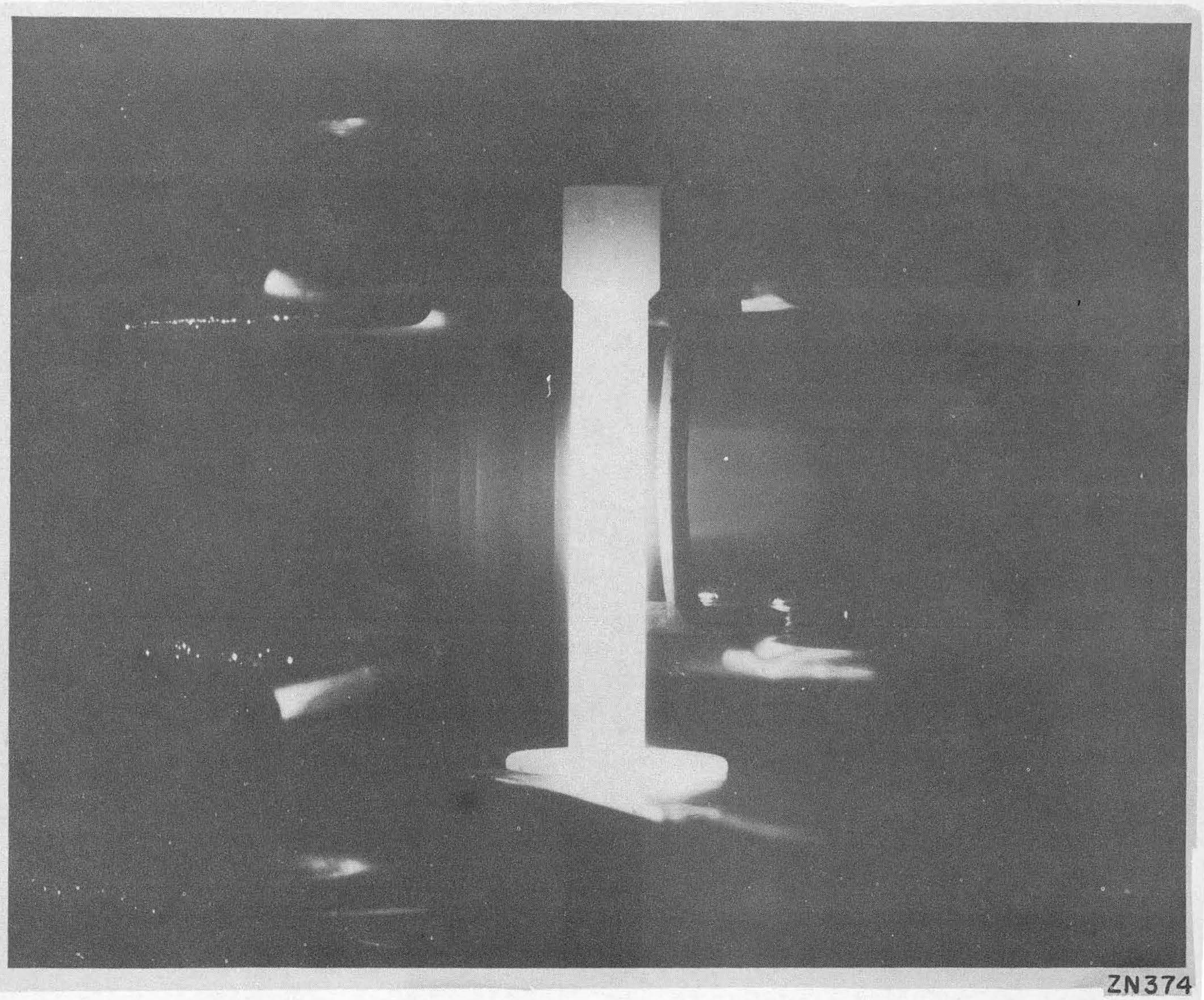
ZN374

Fig. 16

Photograph of source and beam in tank.

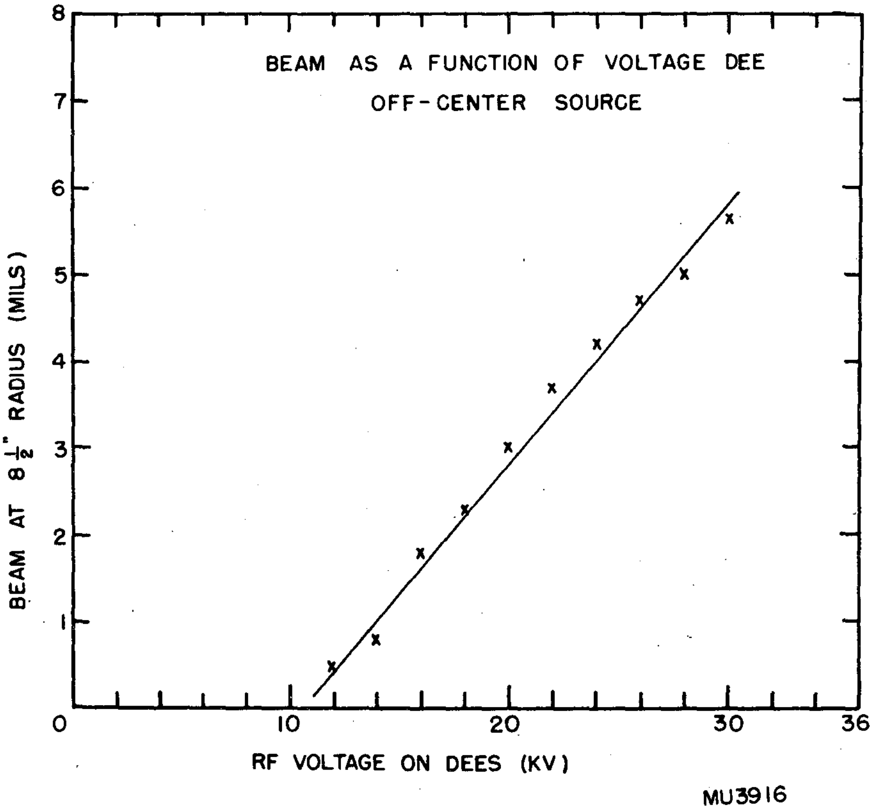

Fig. 17

Diagram of beam as a function of r.f. voltage.

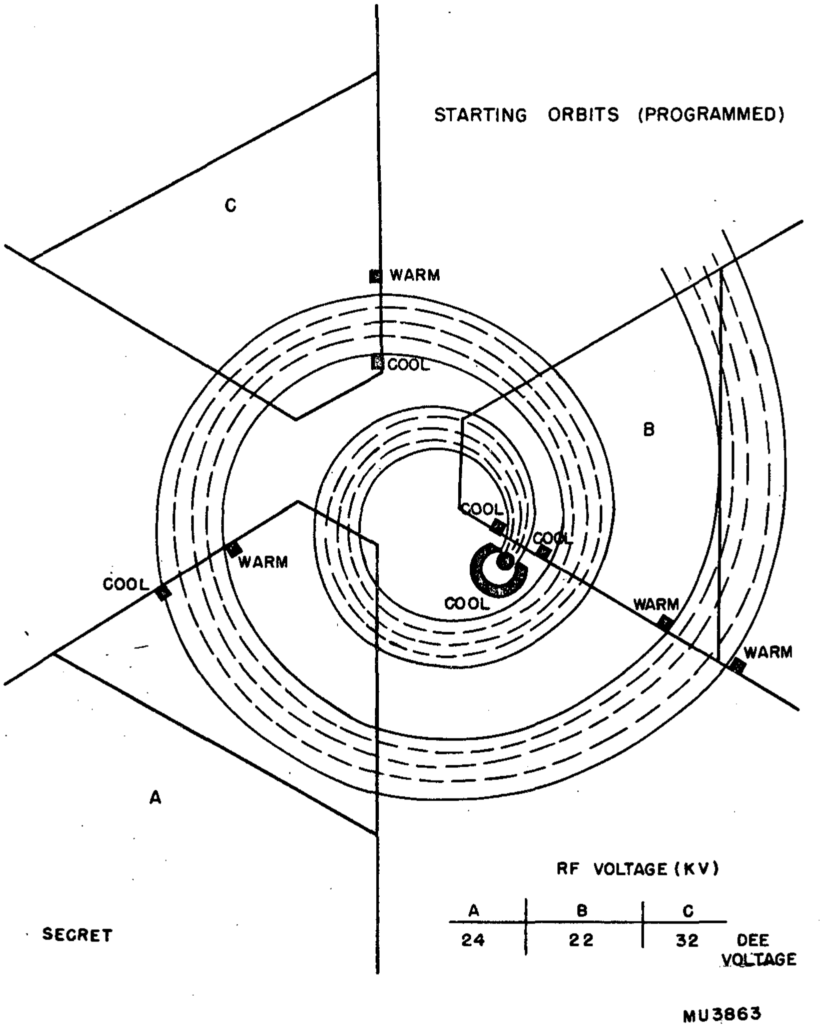

Fig. 18

Diagram of programmed beam.

~~SECRET~~

DECLASSIFIED

~~SECRET~~