Lawrence Berkeley National Laboratory

Lawrence Berkeley National Laboratory

Title

QUAD TIME-TO-AMPLITUDE CONVERTER (LBL #21X9191 P-1)

Permalink

https://escholarship.org/uc/item/83t010mm

Author

McDonald, R.J.

Publication Date

2009-03-27

eScholarship.org Powered by the California Digital Library
University of California

LBL-24220 c.2
UC-37

Lawrence Berkeley Laboratory
UNIVERSITY OF CALIFORNIA

RECEIVED
LAWRENCE
BERKELEY LABORATORY
AUG 5 1988
LIBRARY AND
DOCUMENTS SECTION

Engineering Division

Quad Time-to-Amplitude Converter (LBL #21×9191 P-1)

R.J. McDonald, D.A. Landis, and G.J. Wozniak

February 1988

TWO-WEEK LOAN COPY

This is a Library Circulating Copy which may be borrowed for two weeks.

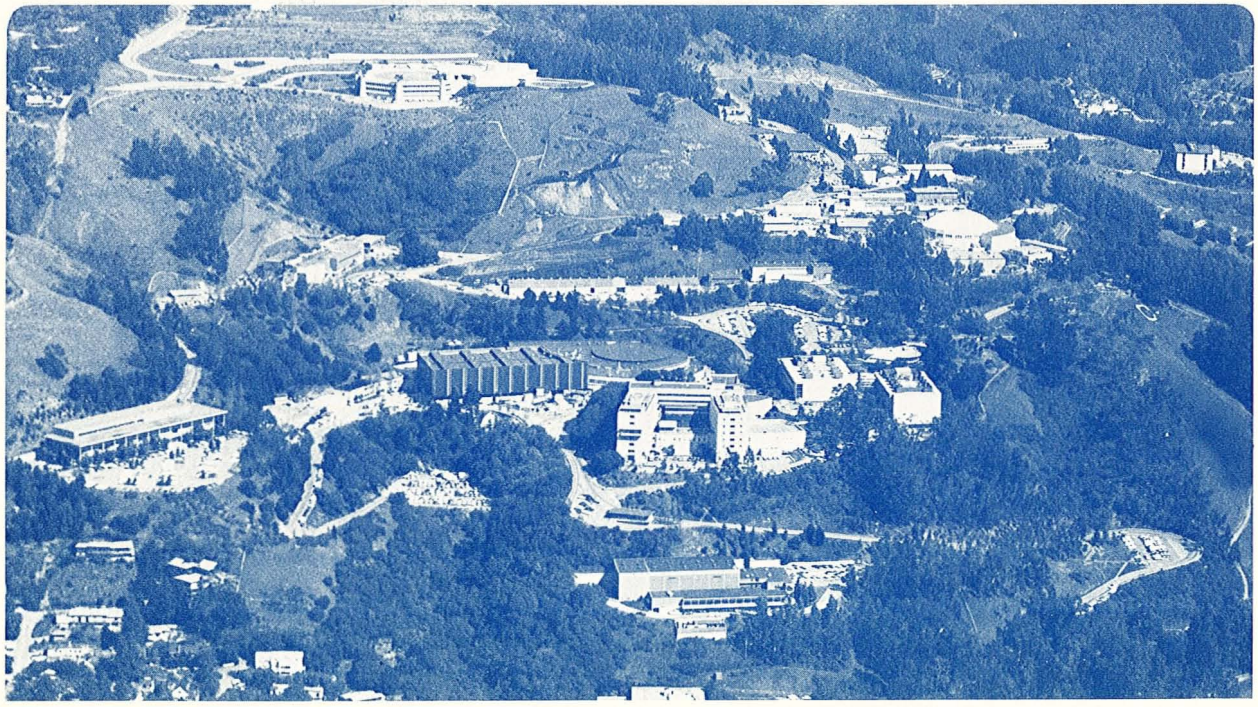

Prepared for the U.S. Department of Energy under Contract Number DE-AC03-76SF00098.

LBL-24220 c.2

LBL-24220

Quad Time-to-Amplitude Converter (LBL #21X9191 P-1)

R. J. McDonald, D. A. Landis, and G. J. Wozniak

Lawrence Berkeley Laboratory
University of California
Berkeley, CA 94720

February 1988

LBL-24220

Quad Time-to-Amplitude Converter (LBL #21X9191 P-1)*

R.J. McDonald, D.A. Landis, and G.J. Wozniak

Accelerator and Fusion Research, Engineering, and Nuclear Science Divisions

Lawrence Berkeley Laboratory
University of California
Berkeley, CA. 94720

Abstract

Four Time-to-Amplitude Converters (TACs) have been designed and packaged in a single-width NIM module. These moderate-resolution units (~0.1% full scale) are ideal for applications where large numbers of TACs are required because of the high packing density provided by the quad configuration. Full-scale ranges of 100 ns, 300 ns, 1 μs, and 3 μs are switch selectable. Read out of each unit may be either internally or externally controlled. All units may be read out at the same time via a common "group readout". The readout time is adjustable between 2 and 20 μs. An LED indicates a valid event.

* This work was supported by the Director, Office of Energy Research, Office of High Energy and Nuclear Physics, Nuclear Science Division, U.S. Department of Energy under contract # DE-ACO3-76SF00098

1. Introduction:

Many modern accelerator-based experiments in nuclear and atomic physics require the measurement of time on the nano-second (ns) or micro-second (μs) scales. The purpose of a Time-to-Amplitude converter (TAC) is to convert a time difference (the time between a "start" and a "stop" pulse) into a voltage pulse whose amplitude is proportional to that time difference. The technique involves using a "start" pulse to turn on a constant-current source which charges a capacitor until the "stop" pulse arrives and turns off the constant-current source. The voltage across the capacitor is then measured and converted into the output pulse. For most applications, linearity and time-resolution performance of ~0.1% of full scale is adequate for a TAC. Higher-resolution units are available for special applications.

In its simplest application, a TAC may be used to measure the time difference between signals from two different detectors. If the signals in both detectors occur simultaneously, the TAC will generate a peak corresponding to zero time difference. To insure that the "stop" pulse always arrives after the "start" pulse, one typically adds delay to the "stop" side to move the pulse height for zero-time-difference events comfortably on scale. Another common use of a TAC is to measure the time difference between an event in a detector and some reference time, perhaps a signal related to the arrival time of the beam on target. The TAC output pulse then allows one to select events that occurred (or did not occur) within some fixed time of the arrival of the beam on target.

Several models of TACs are commercially available. Examples of these are the Canberra 2044 and Tennelec TC862 which package one TAC in a single-width NIM module; and the Canberra 2043, the Tennelec TC863, and the ORTEC 467A which are each in double-width NIM modules and have built-in single-channel analyzers. For critical timing applications, the ORTEC 457 and Tennelec TC864 biased TACs provide excellent timing resolution (~10 ps) since one can expand the time scale with a biased amplifier. The biased TAC is necessary for critical timing applications, such as time-of-flight measurements utilizing channel plates. In most cases, where this quality of time resolution is not necessary, but a substantial number of TACs are required, these commercial TACs take up an inordinate amount of bin space. In such applications, the Quad TAC described herein provides substantial space savings and convenience.

A picture of the Quad TAC is shown in figure 1 and a diagram of the front panel is shown in figure 2 with the various inputs, outputs, and control functions labeled. The Lemo connectors on the left side are for the **START** and **STOP** inputs and the **V**alid-**STOP** monitor. The Lemo connectors on the right side are for the external-readout input and the TAC **OUT**put. A 20 turn

potentiometer is used to adjust the readout time over the range of ~2 to ~20 μs*. The switches in the middle column set the time range and the readout mode (internal or external). An LED indicates a valid stop and a test point is available for the output pulse. An additional "group readout" input is located below the lowest unit. This group readout is the equivalent of applying the same external readout pulse to all four channels. This input can be controlled by either a negative NIM or positive TTL pulse. It is internally terminated with 50 ohms for the negative NIM pulse only.

2. Operation:

A time-to-amplitude converter measures the time difference between pulses at its "start" and "stop" inputs and converts this time difference to a pulse height that is proportional to this time difference. Figure 3a shows a set-up for a simple demonstration of the operation of the Quad TAC unit. A pulse generator is used to send out negative NIM logic pulses at a moderate rate (~1-10 kHz). This signal is fanned out several ways. One signal (oscilloscope channel 1) goes to the **START** input, the second (oscilloscope channel 2) goes to the **STOP** input via a gate and delay generator, such as the LBL 21X6691-P1; and the third goes to a second gate and delay generator. This signal will be used to trigger the external readout. Channel 3 of the oscilloscope is used to monitor the **V**alid-**STOP** output and channel 4 is used for the TAC linear **OUT**put. Figure 3b shows these signals for the case where the internal readout is used. In this example, the delay between the start and stop pulses is 0.6 μs and the unit is set on the 1 μs range. In the "internal readout" mode, the output comes immediately (~10 ns) after the leading edge of the valid-stop pulse. The length of the output signal may be adjusted between ~2 and 20 μs via the 20 turn pot on the front panel. In this case it is 6 μs. The "**V**alid **STOP**" monitor is a pulse that begins with the stop pulse and lasts for the entire readout time. Figure 3c shows nearly the same signals for the case when the module is used in the "external-readout" mode. In this figure, channel 3 of the oscilloscope is the **EXT R**ead **O**ut signal and the dashed line indicates where **V STOP** lies.The readout time set with the **RO-TIME** pot <u>must be long enough to last beyond the end of the external-readout input pulse</u>. An output occurs when there is overlap between the internally-generated output signal (the same as if the box were in internal mode) and the "external readout" input pulse. Here, the external RO pulse is delayed 3 μs from the start pulse and has a width of 2 μs. Note that the "group readout" works exactly the same way and applies the same externally set readout time to all four units in the module. The group readout may be either a positive TTL or a negative NIM input pulse.

---

* Some units were modified to span the range of ~3.5 to 35 μs.

The dead time of this instrument is determined by the RO time plus 2 μs for the reset pulse as shown in figure 4. If the module received a start pulse that was not followed by a stop pulse, the dead time is determined by the range since "reset" follows the "overscale" signal. For these reasons, it is important to keep both the range and the RO time to the minimum required. If possible, it is wise to have the high-count-rate input on the stop side to reduce the number of overscales. In the EXT RO mode, the dead time and reset are still determined by the RO time, and that time must be adjusted via the RO-time pot to exceed the end of the EXT RO input as shown in figure 3c. Thus, the RO time should be longer than the EXT RO, but no longer than necessary (i.e., ~2 μs longer as shown in figure 3c) so as to keep the dead time to a minimum.

Figure 4 is a block diagram of one unit of the Quad TAC with a time diagram of the signals shown below.

3. Summary:

The LBL 21X9191 Quad TAC module provides four units of moderate-resolution TACs in a single-width NIM module. This high packing density is important in many applications in modern nuclear and atomic physics experiments where many time channels with independent start and stop signals are needed.

4. Specifications:

Ranges: 100 ns, 300 ns, 1 μs, and 3 μs; selectable by range and multiplier switches on the front panel.

Inputs: **Start**: Negative NIM, internally terminated with 50 ohms
Stop: Negative NIM, internally terminated with 50 ohms
EXT Read Out: Negative NIM, internally terminated with 50 ohms. The arrival time and duration of this pulse determine the timing and duration of the output pulse.
Grp. Read Out: Accepts either a negative NIM or positive TTL input and functions the same as **EXT RO** for all four channels of the Quad TAC. The **EXT / INT** switch must be in the **EXT** position for either the external RO or the Group RO to be effective and the time set on the readout-time pot must be longer than the external RO signal. This input is terminated in 50 ohms for NIM signals only.

Outputs: **V STOP**: Negative NIM pulse that begins when a **STOP** signal arrives after a **START** signal within the selected time range. This pulse extends for the entire RO time.
OUT: TAC output pulse whose amplitude is proportional to the time difference between **START** and **STOP** pulses. This output swings from 0 V to +8 V, back terminated in 50 ohms.

Reset: ~2 μs after the end of the RO time or the arrival of the "overscale" signal.

Power:

+24: 140 mA	+12: 235 mA	+6: 205 mA
-24: 105 mA	-12: 160 mA	-6: 325 mA

Figure Captions

Figure 1. Picture of the Quad TAC from the front (right picture) and from the back and side (left picture). One cover is removed to show the details of construction.

Figure 2. Illustration of the front panel and description of the controls and connectors.

Figure 3 a) Demonstration circuit. An ORTEC 462 TAC Calibrator may be used to provide the negative NIM pulses, a LeCroy 429A as the fanout, and the LBL 21X-6691-P1 quad gate and delay generator may be used to provide both the 0.6 μs delayed **STOP** and the **EXT**ernal-**RO** pulse. The numbers in circles indicate oscilloscope test points, as discussed in the text. b) Signals for the example of internal read-out. Ch. 1 is the **START**, Ch. 2 is the **STOP**, Ch. 3 is the **V**alid **STOP**, and Ch. 4 is the TAC **OUT**put. Note that the **V STOP** and output pulses have been attenuated to fit on scale with the 0.5 V/cm range of channels 3 and 4 of the Tektronix 2465 oscilloscope. c) Signals for the example of external read-out. Here, channel 3 is the external readout pulse and the dashed line is the valid stop signal. Again, channels 3 and 4 are attenuated.

Figure 4. Block Diagram of the circuit for one unit of the Quad TAC with signals as a function of time shown below. Note the timing of the "reset" pulse.

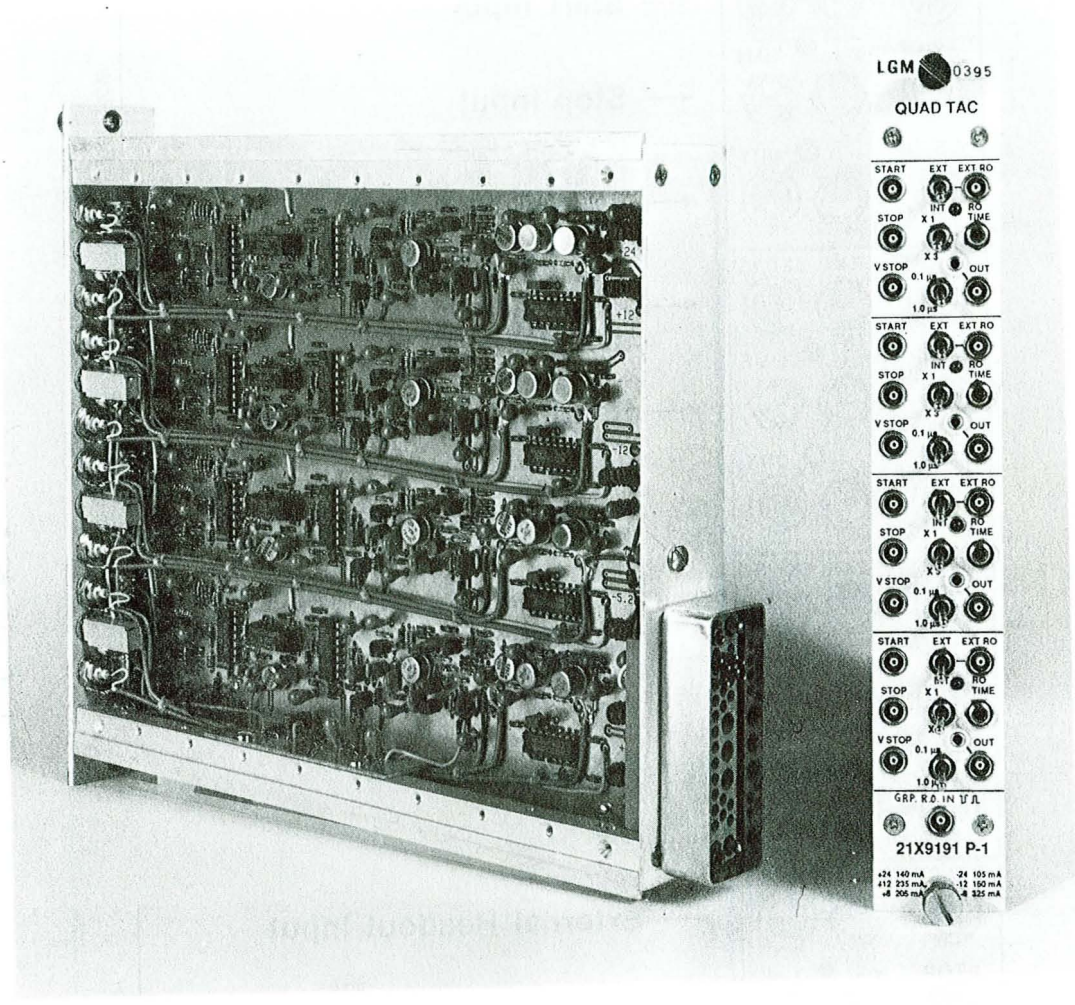

XBB 879-7789

Figure 1

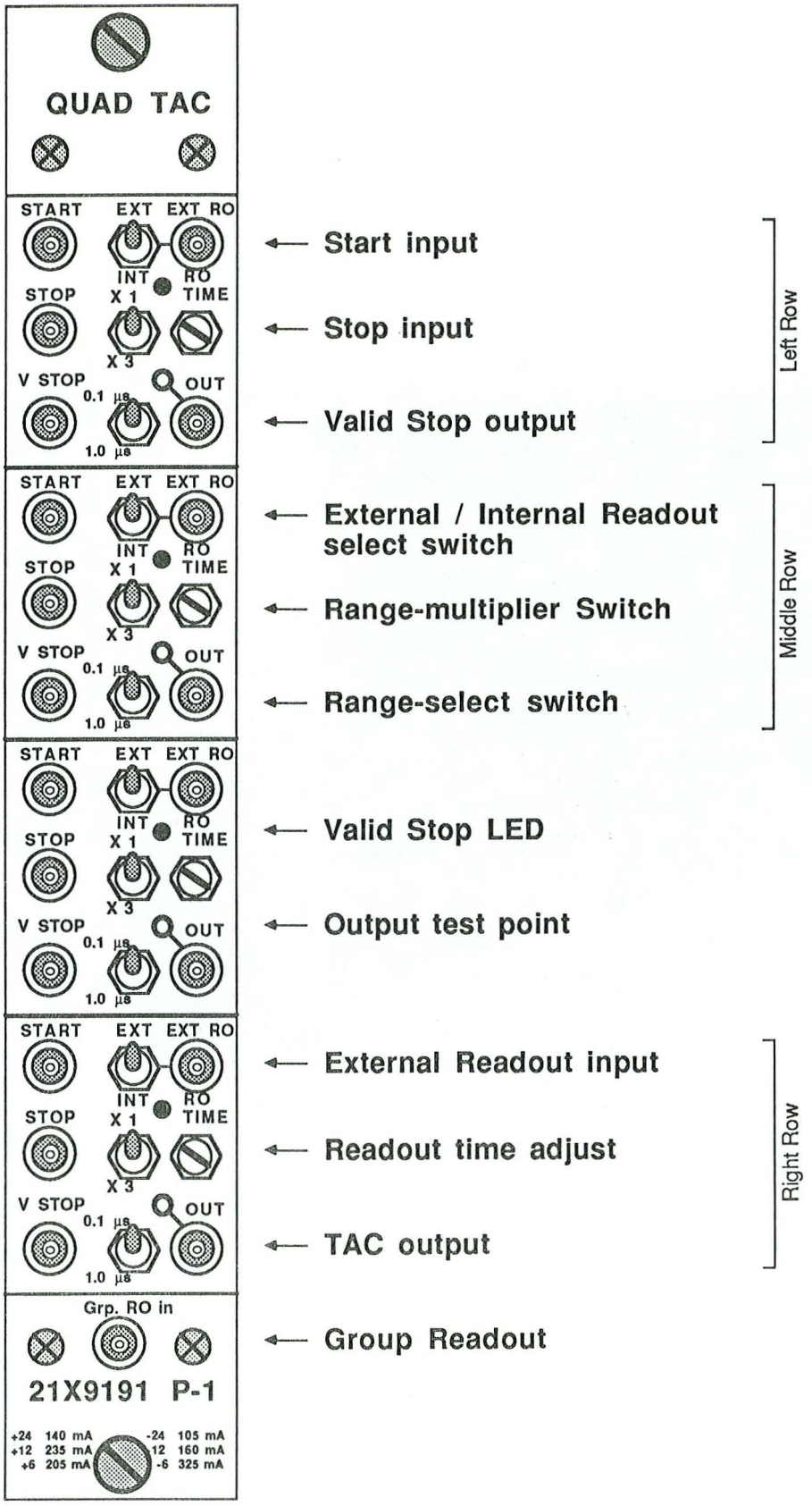
QUAD TAC
START
EXT
EXT RO
INT
RO
STOP
X 1
TIME
X 3
V STOP
0.1 µs
OUT
1.0 µs
Start input
Stop input
Valid Stop output
Left Row
External / Internal Readout select switch
Range-multiplier Switch
Range-select switch
Middle Row
Valid Stop LED
Output test point
External Readout input
Readout time adjust
TAC output
Right Row
Grp. RO in
Group Readout
21X9191 P-1
+24 140 mA
+12 235 mA
+6 205 mA
-24 105 mA
-12 160 mA
-6 325 mA

Figure 2

a)

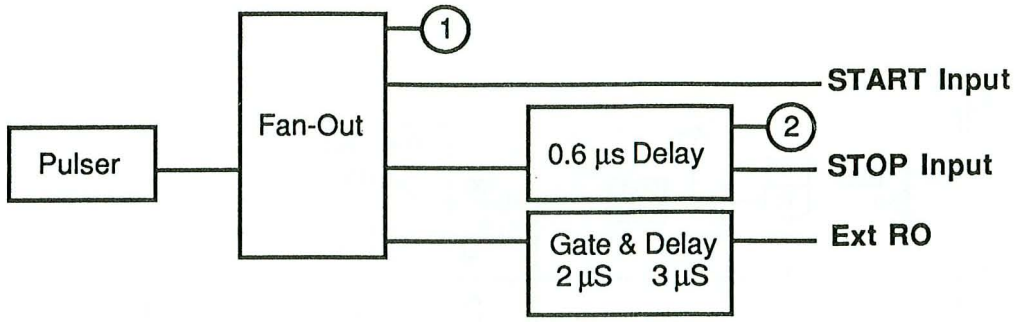
Pulser
Fan-Out
1
START Input
0.6 µs Delay
2
STOP Input
Gate & Delay
2 µS 3 µS
Ext RO

b)

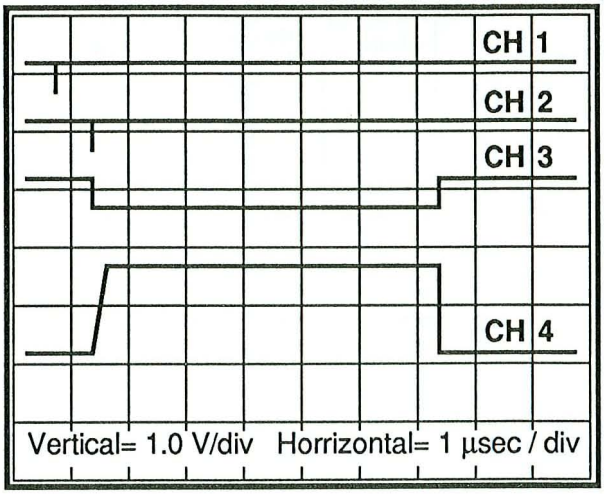
CH 1
CH 2
CH 3
CH 4
Vertical= 1.0 V/div Horrizontal= 1 µsec / div

c)

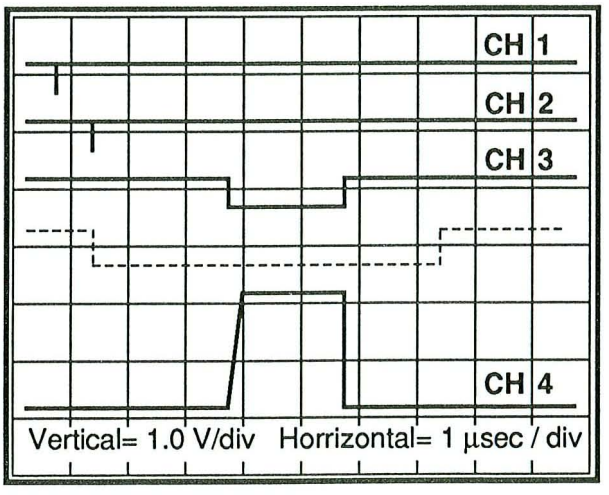
CH 1
CH 2
CH 3
CH 4
Vertical= 1.0 V/div Horrizontal= 1 µsec / div

Figure 3

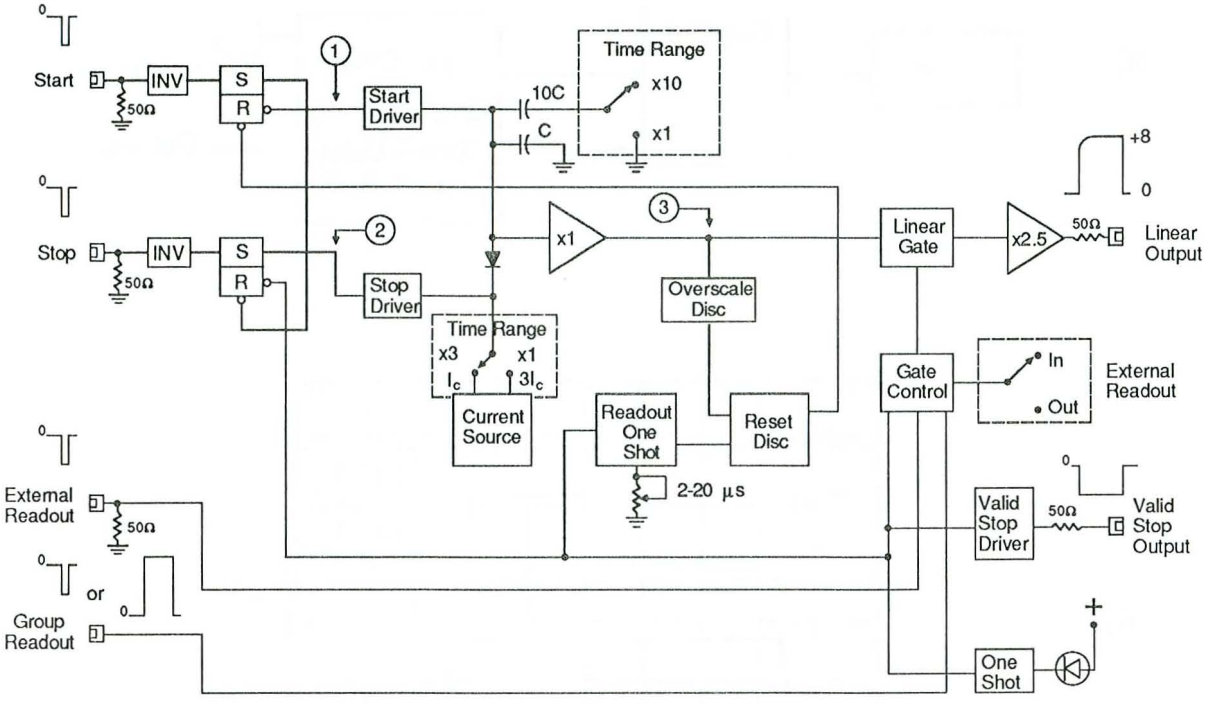
Start
INV
S
R
50Ω
Start Driver
Time Range
x10
x1
10C
C
Stop
Stop Driver
x1
Overscale Disc
Linear Gate
x2.5
+8
0
Linear Output
Time Range
x3
x1
I_c
$3I_c$
Current Source
Readout One Shot
Reset Disc
2-20 µs
Gate Control
In
Out
External Readout
External Readout
Valid Stop Driver
Valid Stop Output
or
Group Readout
One Shot

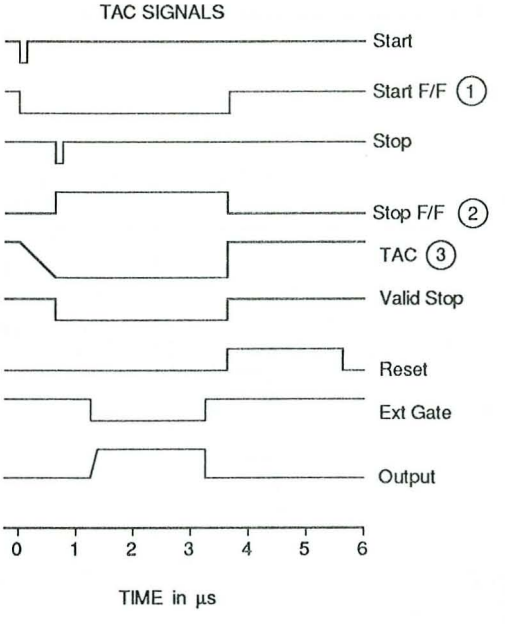
TAC SIGNALS
Start
Start F/F 1
Stop
Stop F/F 2
TAC 3
Valid Stop
Reset
Ext Gate
Output
0
1
2
3
4
5
6
TIME in µs

Figure 4