Lawrence Berkeley National Laboratory

Recent Work

Title

Electronics Schematics for the Donner 600 Crystal Tomograph

Permalink

https://escholarship.org/uc/item/8cx6s4k2

Authors

Huesman, R.H.
Derenzo, S.E.
Moses, W.W.
et al.

Publication Date

1992-09-01

eScholarship.org Powered by the California Digital Library
University of California

LBL-29628
UC-408

Lawrence Berkeley Laboratory
UNIVERSITY OF CALIFORNIA

Electronic Schematics for the Donner 600 Crystal Tomograph

R.H. Huesman, S.E. Derenzo, W.W. Moses, J.L. Cahoon, A.B. Geyer, B.T. Turko, D.C. Uber, M. Colina, M.H. Ho, and T.F. Budinger

September 1992

Donner Laboratory

Biology & Medicine Division

| REFERENCE COPY |
| Does Not |
| Circulate |
| Bldg. 50 Library. |
LBL-29628
Copy 1

Prepared for the U.S. Department of Energy under Contract Number DE-AC03-76SF00098

DISCLAIMER

This document was prepared as an account of work sponsored by the United States Government. While this document is believed to contain correct information, neither the United States Government nor any agency thereof, nor the Regents of the University of California, nor any of their employees, makes any warranty, express or implied, or assumes any legal responsibility for the accuracy, completeness, or usefulness of any information, apparatus, product, or process disclosed, or represents that its use would not infringe privately owned rights. Reference herein to any specific commercial product, process, or service by its trade name, trademark, manufacturer, or otherwise, does not necessarily constitute or imply its endorsement, recommendation, or favoring by the United States Government or any agency thereof, or the Regents of the University of California. The views and opinions of authors expressed herein do not necessarily state or reflect those of the United States Government or any agency thereof or the Regents of the University of California.

LBL-29628
UC-408

Electronic Schematics for the Donner 600 Crystal Tomograph

R.H. Huesman, S. E. Derenzo, W.W. Moses, J.L. Cahoon,
A.B. Geyer, B.T. Turko, D.C. Uber, M. Colina, M.H. Ho,
T.F. Budinger

Life Science Division
Center for Functional Imaging
Lawrence Berkeley Laboratory
University of California
Berkeley, California 94720

September 1992

This work was supported in part by the Director, Office of Energy Research, Office of Health and Environmental Research of the U.S. Department of Energy, under contract No. DE-AC03-76SF00098, and in part by Public Health Service Grant Number P01 HL25840 awarded by the National Heart Lung and Blood Institute, Department of Health and Human Services.

TABLE OF CONTENTS

Title (Description)	Page
System Block Diagram	1
Backplane (How to read the diagrams)	2
Backplane (How the bins interact)	3
Backplane (Bin rack)	4
Backplane (Bin 1-15)	5
Backplane (Bin 16 & bus terminator panel)	6
Backplane (How to read the chart)	7
Backplane (Chart)	8
PMT Base	9
Front End Card (Analog processing channel)	10
Front End Card (DAC and control logic)	11
Front End Card (Left/Right veto)	12
Front End Card (Power supply: ±15V, +5V, -5.2V, -2V)	13
Address Card (Input to L)	14
Address Card (L to A)	15
Address Card (A to output)	16
Coincidence Card (Ontime Fast FIFO)	17
Coincidence Card (Offtime Fast FIFO)	18
Coincidence Card (On/Off time coincidence logic)	19
Coincidence Card (Data and control I/O)	20
Coincidence Card (Power supply: ±15V, +5V, -5.2V, -2V)	21
Unloader Card (Input latch)	22
Unloader Card (Priority encoder)	23
Unloader Card (One shots)	24
Unloader Card (Concentrator card select)	25
Concentrator Card (Control logic)	26
Concentrator Card (FIFO)	27
Concentrator Card (Source position logic)	28
Concentrator Card (Rotating RAM logic)	29
Concentrator Card (Data out)	30
Histogrammer Selector Card	31
Decoder Card (Control logic)	32
Decoder Card (Power supply: ±15V, +5V, -5.2V)	33
Decoder Driver Card	34
Decoder Driver Driver Card	35
6809 Data Acquisition Control Module (MC6809 control logic)	36
6809 Data Acquisition Control Module (Address & data logic)	37
6809 Data Acquisition Control Module (CAMAC interface)	38
6809 Data Acquisition Control Module (CAMAC control lines)	39
6809 I/O Module	40
Orbiting Source Controller Card (6809 control logic)	41
Orbiting Source Controller Card (Address & data logic)	42
Orbiting Source Controller Card (Signal logic)	43
Orbiting Source Controller Card (Tx/Rx logic)	44
Orbiting Source Controller Card (Pin connections/names)	45
Orbiting Source Controller Card (More connections/names)	46
Porc Interface (Front panel)	47
Porc Interface (Gap measurement)	48
Source Sensor	49
-2 Volt Regulator	50
Stepping Motor Controller	51
ECG Gate Generator (Schematic)	52
ECG Gate Generator (Waveform)	53
PET Bed Remote Display Unit (Display unit)	54
PET Bed Remote Display Unit (HDSP IC to LED connection)	55
High Voltage Interlock	56

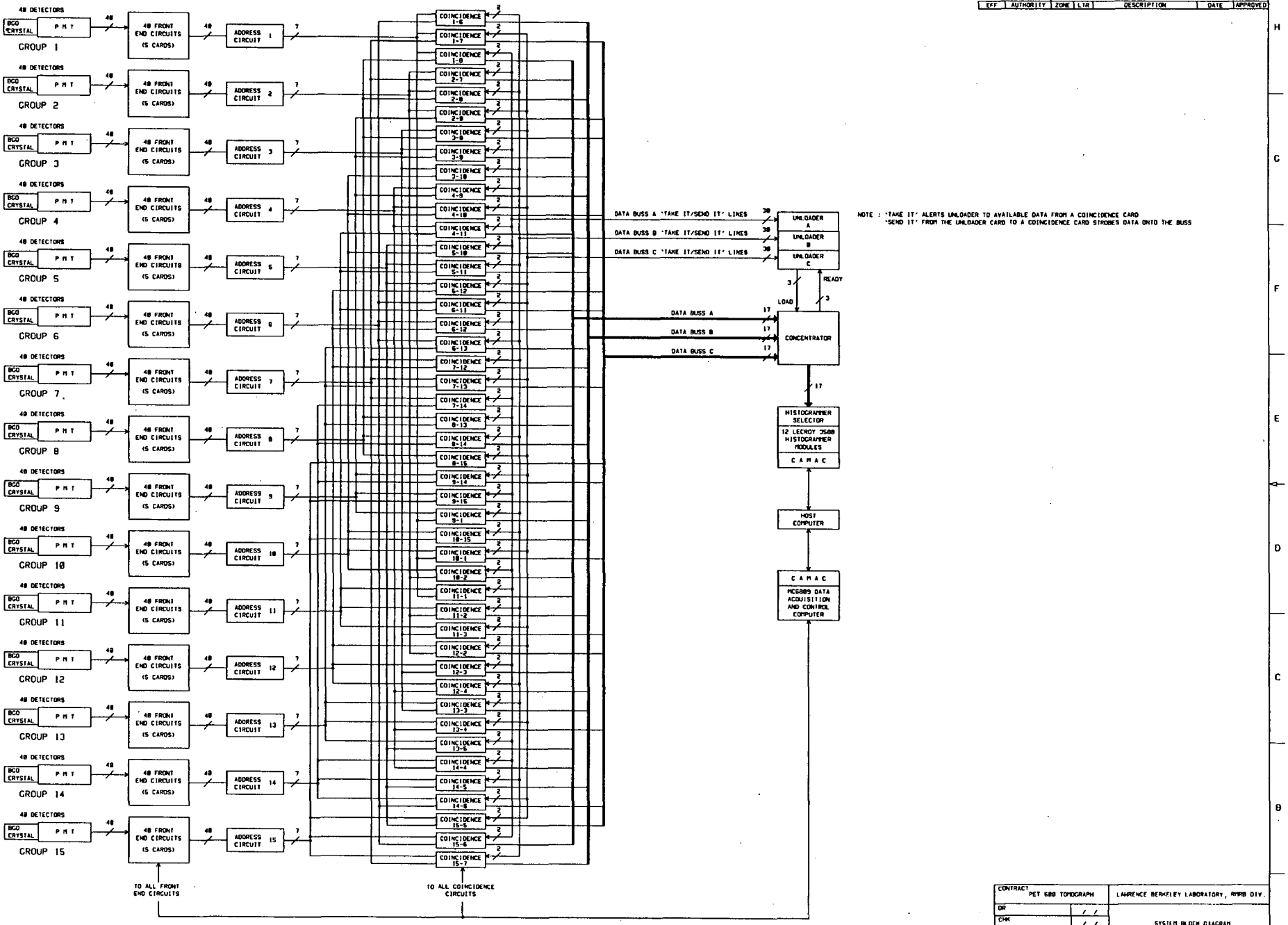

REVISIONS						
ECP	AUTHORITY	ZONE	LTR	DESCRIPTION	DATE	APPROVED

CONTRACT PET 688 TOMOGRAPH		LAWRENCE BERKELEY LABORATORY, MRRB DIV.	
DR	/ /		
CHK	/ /	SYSTEM BLOCK DIAGRAM	
ENG	/ /		
APPD	/ /		
NEXT HIGHER ASSY.		SIZE C	FSCM NO.
		DWG NO 72-818 3	
19:18:23	16-Jan-92	BLOCKDIA	SHEET 1 OF 1

HOW TO READ THE PET 600 BACKPLANE DIAGRAMS

The following documents show how the PET 600 Tomograph is laid out and wired. All the drawings are done as seen from the back of the rack.

Cables connected to bin 1 through 15 are referred to by their bin number (**B#**) followed by their pin strip number (**P#**) and then by the lowest pin number in a connector (when there is more than one connector to a strip) - see diagram "BIN 1-15 CONNECTOR LAYOUT".

Since bin 16 has no labels on the back, the pin strips are referred to by the cards the strips are connected to - see "BIN 16 CONNECTOR LAYOUT". If there is more than one connector to a strip, the connectors are numbered from 1 up to 4 starting from left to right. The connector number is shown in the lower left corner of the connector. The information denoted by an arrow (->) inside the connector tells you where that connector is connected to at the other end.

The four databus in the system are P1, A, B, and C. P1 is the decoder databus. It carries instructions from the decoder driver in bin 16 to the decoders in bin 1 through 15. A, B, and C carry data from the coincidence cards in bin 1 through 15 to the concentrator card in bin 16. All databus starts from bin 16 and split into two directions; one goes to the top half of the rack and the other goes to the bottom half of the rack (see fig. 1). The databus are terminated in the databus terminator panel located on the opposite side of the rack.

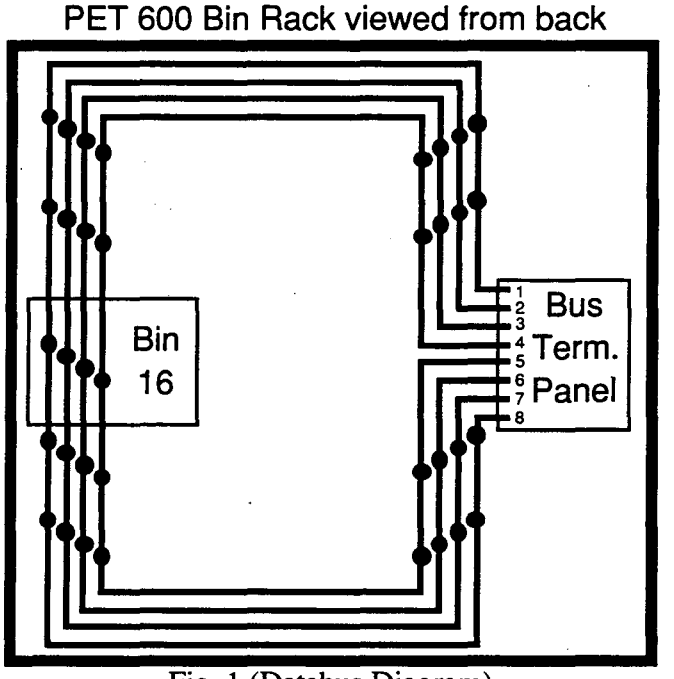

Fig. 1 (Databus Diagram)
Databus P1, A, B, and C originate from bin 16 and loop to the top and bottom through bin 1 to 15 then terminate at the Databus Terminator Panel.

Drawing Number:72X018 1
Page 1 of 7

HOW THE BINS INTERACT WITH EACH OTHER

In bin 1 to 15, there are a total of 12 pin strips with 13 connectors, some connectors are on the same strip. The connectors are described by their strip number (**P#**) and also by their lowest pin number when there is more than one connector to a strip.

P1 is connected to the decoder board which receives commands via the databus from the decoder driver in bin 16. This is how the individual decoders are controlled.

P2 and P6 are connected to the front end cards. P2 and P6 are the left right veto lines which prevent the adjacent crystals from recording the same event. The crystals within a group are internally wired for the left right veto. We use P2 and P6 connectors to connect the last crystal in a group to the first crystal in the next group.

P7 is connected to the address card. There are three connectors on this strip, P7(1), P7(18), and P7(35). Pin strip P7 has four rows of pins (the rest have only two) and the connectors are placed on the central two rows (labeled B and C) leaving the outer two rows (labeled A and D) without connections. The crystals in this group are placed in coincidence with the crystals from six other groups. Three of the six coincidence circuits are located in the local bin - the remaining three are located in three remote bins. We use strip P7 cables to carry the local crystal addresses to remote coincidence cards to form the coincidences that are not processed locally.

P10, P11, P12 are the coincidence ports that receive the remote crystal addresses. There are two connectors for each strip making a total of six connectors, P10(3), P10(41), P11(3), P11(41), P12(3), and P12(41). P10(41), P11(41), and P12(41) are individually connected to the remote address cards in coincidence with the local address card. P10(3), P11(3), and P12(3) are connected to databus A, B, and C; this connector-databus order alternates from bin to bin. P10(3), P11(3), and P12(3) send out coincidence addresses to the concentrator card in bin 16 to be processed.

P13 takes in instructions from Unloader A, B, C in bin 16. These instructions tell the bin when it is time to use the databus and when to send data to the concentrator.

PET 600 Backplane

BIN RACK LAYOUT VIEWED FROM THE BACK

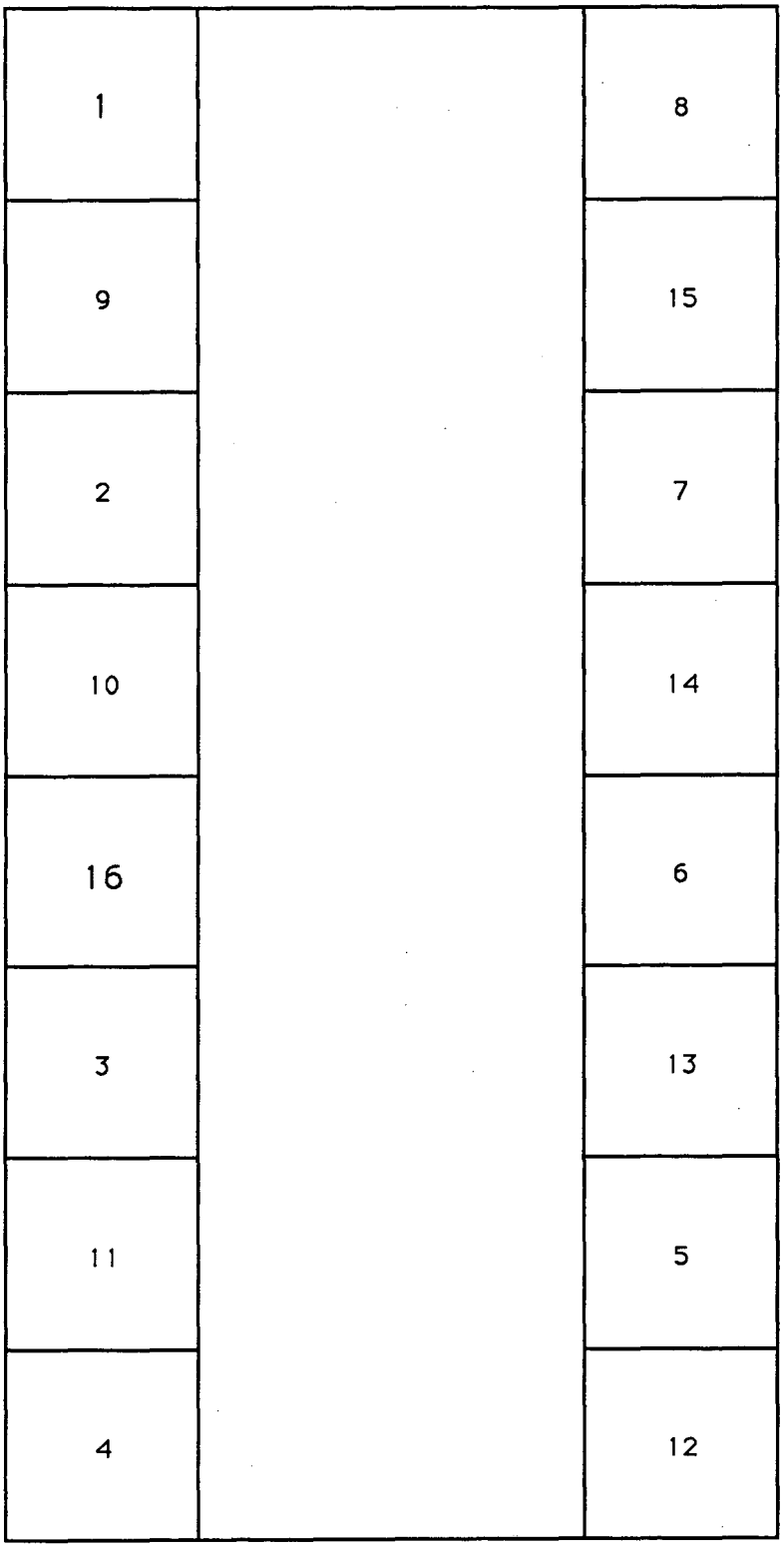

DRAWING NUMBER:72X018 1
PAGE 3 OF 7

FOR EXPLANATION, SEE "HOW TO READ THE PET 600 BACKPLANE DIAGRAMS"

PET 600 Backplane

BIN 1-15 CONNECTOR LAYOUT

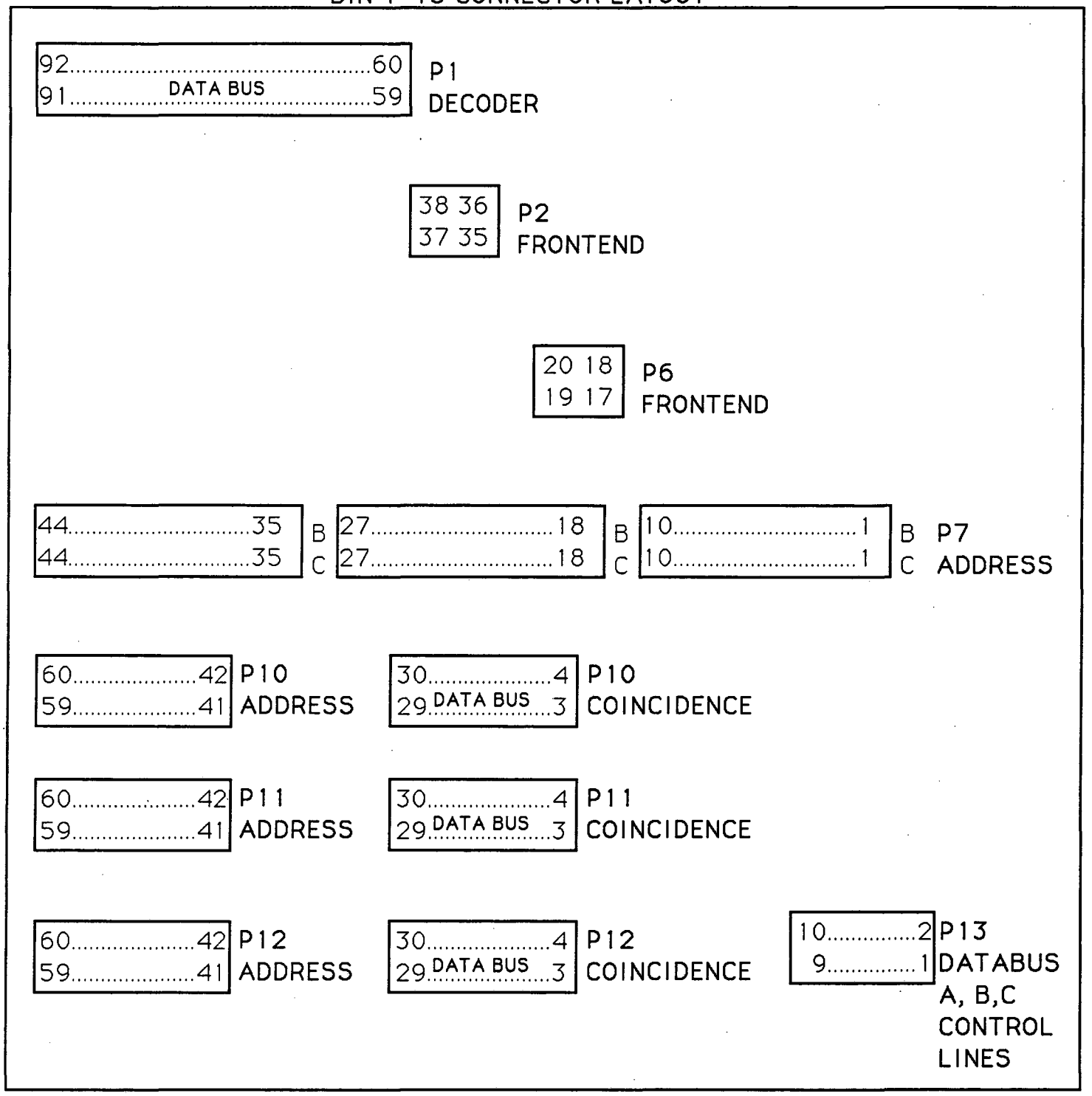

Note: Bin 5,6,7,8,12,13,14,15 are right side up
and
Bin 1,2,3,4,9,10,11 are upside down

DRAWING NUMBER:72X018 1
PAGE 4 OF 7

FOR EXPLANATION, SEE "HOW TO READ THE PET 600 BACKPLANE DIAGRAMS"

PET 600 Backplane

BIN 16 CONNECTOR LAYOUT

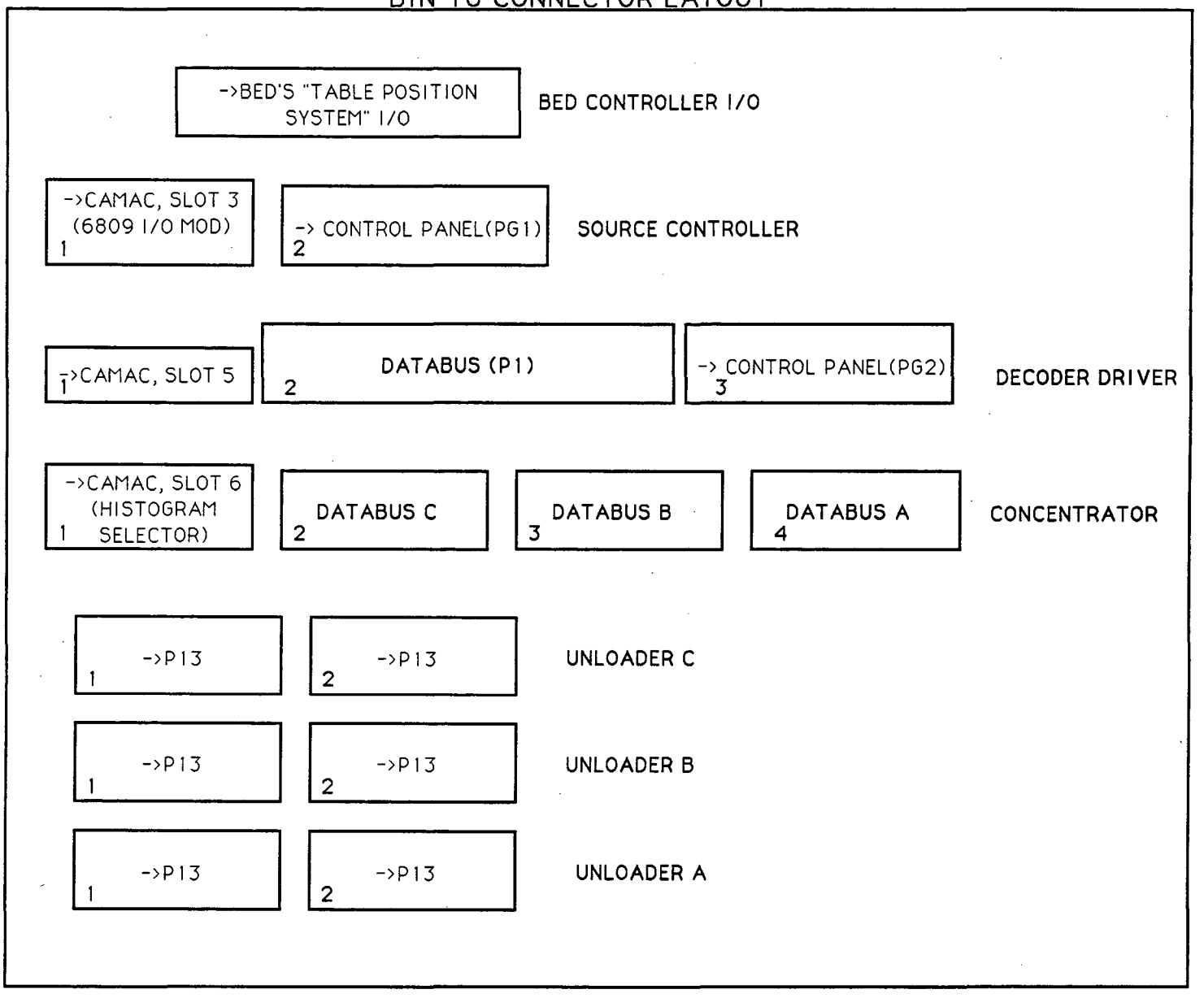

BUS TERMINATOR PANEL

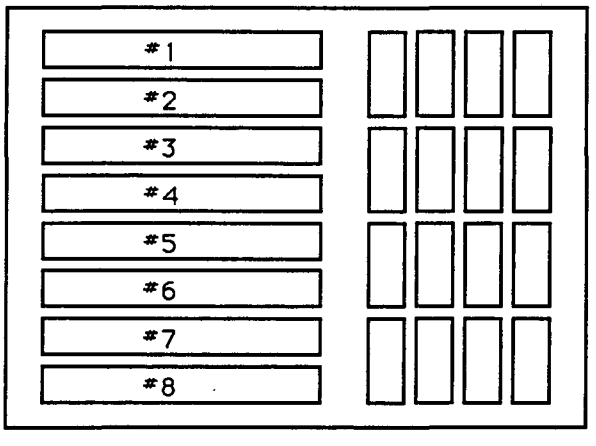

DRAWING NUMBER:72X018 1
PAGE 5 OF 7

FOR EXPLANATION, SEE "HOW TO READ THE PET 600 BACKPLANE DIAGRAMS"

HOW TO READ THE CONNECTOR CHART

Bin 1 to 15 are labeled as follow:

B1	<- Bin 1
P1:B8P1 & B9P1	<- *In pin strip* P1: *the cables are connected to* Bin 8 *strip* P1 and to Bin 9 *strip* P1
P2:B2P6	
P6:B15P2	<- *In pin strip* P6: *the cable is connected to* Bin 15 *strip* P2
P7(1):B6P12(41)	<- *In pin strip* P7 (*starting pin* 1): *the cable is connected to* Bin 6 *strip* P12 (*starting pin* 41)
P7(18):B7P11(41)	
P7(35):B8P10(41)	
P10(3):B8P11(3) & B9P12(3)	
P10(41):B9P7(35)	
P11(3):B8P12(3) & B9P10(3)	
P11(41):B10P7(18)	
P12(3):B8P10(3) & B9P11(3)	
P12(41):B11P7(11)	
P13:B16,U(A) & U(B) & U(C)	<- *In pin strip* P13: *the cables are connected to* Bin 16 *into* Unloader(A) and Unloader(B) and Unloader(C)

Bin 16 is labeled as follow:

B16	<- Bin 16
BED CONTROLLER I/O: BED'S "TABLE POSITION SYSTEM" I/O	(Bin 16 is not well labeled so the connectors are named after the boards they are attached to - see diagram "BIN 16 CONNECTOR LAYOUT". When there are more than one connector to one board, the connectors are numbered from 1 up to 4 starting from left to right. Due to lack of writing space in the chart, bin 16's board connectors are abbreviated as follow: Decoder: D(1), D(2) Concentrator: C(1),...,C(4) Unloader: U(A), U(B), U(C)
SOURCE CONTROLLER(1): CAMAC, SLOT 3 (6809 I/O MOD)	
SOURCE CONTROLLER(2):CONTROL PANEL (PG1)	
DECODER(1):CAMAC, SLOT 5	
DECODER(2):B3P1 & B10P1	
DECODER(3):CONTROL PANEL (PG2)	
CONCENTRATOR(1):CAMAC, SLOT 6 (HISTOGRAM SELECTOR)	
CONCENTRATOR(2):B3P10(3) & B10P11(3)	
CONCENTRATOR(3):B3P12(3) & B10P10(3)	
CONCENTRATOR(4):B3P11(3) & B10P12(3)	
UNLOADER A(1):ALL P13	
UNLOADER A(2):ALL P13	
UNLOADER B(1):ALL P13	
UNLOADER B(2):ALL P13	
UNLOADER C(1):ALL P13	
UNLOADER C(2):ALL P13	

CONNECTOR CHART

B1	B2	B3	B4	B5	B6
P1:B8P1 & B9P1	P1:B9P1 & B10P1	P1:B16,D(2) & B11P1	P1:B11P1 & B12P1	P1:B12P1 & B13P1	P1:B13P1 & #1
P2:B2P6	P2:B3P6	P2:B4P6	P2:B5P6	P2:B6P6	P2:B7P6
P6:B15P2	P6:B1P2	P6:B2P2	P6:B3P2	P6:B4P2	P6:B5P2
P7(1):B6P12(41)	P7(1):B7P12(41)	P7(1):B8P12(41)	P7(1):B9P12(41)	P7(1):B10P12(41)	P7(1):B11P12(41)
P7(18):B7P11(41)	P7(18):B8P11(41)	P7(18):B9P11(41)	P7(18):B10P11(41)	P7(18):B11P11(41)	P7(18):B12P11(41)
P7(35):B8P10(41)	P7(35):B9P10(41)	P7(35):B10P10(41)	P7(35):B11P10(41)	P7(35):B12P10(41)	P7(35):B13P10(41)
P10(3):B8P11(3) & B9P12(3)	P10(3):B9P11(3) & B10P12(3)	P10(3):B16,C(2) & B11P12(3)	P10(3):B11P11(3) & B12P12(3)	P10(3):B12P11(3) & B13P12(3)	P10(3):B13P11(3) & B14P12(3)
P10(41):B9P7(35)	P10(41):B10P7(35)	P10(41):B11P7(35)	P10(41):B12P7(35)	P10(41):B13P7(35)	P10(41):B14P7(35)
P11(3):B8P12(3) & B9P10(3)	P11(3):B9P12(3) & B10P10(3)	P11(3):B16,C(4) & B11P10(3)	P11(3):B11P12(3) & B12P10(3)	P11(3):B12P12(3) & B13P10(3)	P11(3):B13P12(3) & B14P10(3)
P11(41):B10P7(18)	P11(41):B11P7(18)	P11(41):B12P7(18)	P11(41):B13P7(18)	P11(41):B14P7(18)	P11(41):B15P7(18)
P12(3):B8P10(3) & B9P11(3)	P12(3):B9P10(3) & B10P11(3)	P12(3):B16,C(3) & B11P11(3)	P12(3):B11P10(3) & B12P11(3)	P12(3):B12P10(3) & B13P11(3)	P12(3):B13P10(3) & B14P11(3)
P12(41):B11P7(11)	P12(41):B12P7(11)	P12(41):B13P7(11)	P12(41):B14P7(11)	P12(41):B15P7(11)	P12(41):B1P7(11)
P13:B16,U(A) & U(B) & U(C)	P13:B16,U(A) & U(B) & U(C)	P13:B16,U(A) & U(B) & U(C)	P13:B16,U(A) & U(B) & U(C)	P13:B16,U(A) & U(B) & U(C)	P13:B16,U(A) & U(B) & U(C)
B7	**B8**	**B9**	**B10**	**B11**	**B12**
P1:B14P1 & B15P1	P1:B15P1 & B1P1	P1:B1P1 & B2P1	P1:B2P1 & B16,D(2)	P1:B3P1 & B4P1	P1:B4P1 & B5P1
P2:B8P6	P2:B9P6	P2:B10P6	P2:B11P6	P2:B12P6	P2:B13P6
P6:B6P2	P6:B7P2	P6:B8P2	P6:B9P2	P6:B10P2	P6:B11P2
P7(1):B12P12(41)	P7(1):B13P12(41)	P7(1):B14P12(41)	P7(1):B15P12(41)	P7(1):B1P12(41)	P7(1):B2P12(41)
P7(18):B13P11(41)	P7(18):B14P11(41)	P7(18):B15P11(41)	P7(18):B1P11(41)	P7(18):B2P11(41)	P7(18):B3P11(41)
P7(35):B14P10(41)	P7(35):B15P10(41)	P7(35):B1P10(41)	P7(35):B2P10(41)	P7(35):B3P10(41)	P7(35):B4P10(41)
P10(3):# 5 & B15P12(3)	P10(3):B15P11(3) & B1P12(3)	P10(3):B1P11(3) & B2P12(3)	P10(3):B2P11(3) & B16,C(3)	P10(3):B3P11(3) & B4P12(3)	P10(3):B4P11(3) & B5P12(3)
P10(41):B15P7(35)	P10(41):B1P7(35)	P10(41):B2P7(35)	P10(41):B3P7(35)	P10(41):B4P7(35)	P10(41):B5P7(35)
P11(3):# 7 & B15P10(3)	P11(3):B15P12(3) & B1P10(3)	P11(3):B1P12(3) & B2P10(3)	P11(3):B2P12(3) & B16,C(2)	P11(3):B3P12(3) & B4P10(3)	P11(3):B4P12(3) & B5P10(3)
P11(41):B1P7(18)	P11(41):B2P7(18)	P11(41):B3P7(18)	P11(41):B4P7(18)	P11(41):B5P7(18)	P11(41):B6P7(18)
P12(3):# 3 & B15P11(3)	P12(3):B15P10(3) & B1P11(3)	P12(3):B1P10(3) & B2P11(3)	P12(3):B2P10(3) & B16,C(4)	P12(3):B3P10(3) & B4P11(3)	P12(3):B4P10(3) & B5P11(3)
P12(41):B2P7(11)	P12(41):B3P7(11)	P12(41):B4P7(11)	P12(41):B5P7(11)	P12(41):B6P7(11)	P12(41):B7P7(11)
P13:B16,U(A) & U(B) & U(C)	P13:B16,U(A) & U(B) & U(C)	P13:B16,U(A) & U(B) & U(C)	P13:B16,U(A) & U(B) & U(C)	P13:B16,U(A) & U(B) & U(C)	P13:B16,U(A) & U(B) & U(C)

B13	B14	B15	B16	BUS TERMINATOR PANEL
P1:B5P1 & B6P1	P1:# 2 & B7P1	P1:B7P1 & B8P1	BED CONTROLLER I/O: BED'S "TABLE POSITION SYSTEM" I/O	#1:B6P1
P2:B14P6	P2:B15P6	P2:B1P6	SOURCE CONTROLLER(1): CAMAC, SLOT 3 (6809 I/O MOD)	#2:B14P1
P6:B12P2	P6:B13P2	P6:B14P2	SOURCE CONTROLLER(2):CONTROL PANEL (PG1)	#3:B7P12(3)
P7(1):B3P12(41)	P7(1):B4P12(41)	P7(1):B5P12(41)	DECODER(1):CAMAC, SLOT 5	#4:B14P10(3)
P7(18):B4P11(41)	P7(18):B5P11(41)	P7(18):B6P11(41)	DECODER(2):B3P1 & B10P1	#5:B7P11(3)
P7(35):B5P10(41)	P7(35):B6P10(41)	P7(35):B7P10(41)	DECODER(3):CONTROL PANEL (PG2)	#6:B14P11(3)
P10(3):B5P11(3) & B6P12(3)	P10(3):B6P11(3) & # 4	P10(3):B7P11(3) & B8P12(3)	CONCENTRATOR(1):CAMAC, SLOT 6 (HISTOGRAM SELECTOR)	#7:B7P10(3)
P10(41):B6P7(35)	P10(41):B7P7(35)	P10(41):B8P7(35)	CONCENTRATOR(2):B3P10(3) & B10P11(3)	#8:B14P12(3)
P11(3):B5P12(3) & B6P10(3)	P11(3):B6P12(3) & # 6	P11(3):B7P12(3) & B8P10(3)	CONCENTRATOR(3):B3P12(3) & B10P10(3)	
P11(41):B7P7(18)	P11(41):B8P7(18)	P11(41):B9P7(18)	CONCENTRATOR(4):B3P11(3) & B10P12(3)	**ABBREVIATIONS FOR BIN 16:**
P12(3):B5P10(3) & B6P11(3)	P12(3):B6P10(3) & # 8	P12(3):B7P10(3) & B8P11(3)	UNLOADER A(1):ALL P13	C=CONCENTRATOR
P12(41):B8P7(11)	P12(41):B9P7(11)	P12(41):B10P7(11)	UNLOADER A(2):ALL P13	D=DECODER
P13:B16,U(A) & U(B) & U(C)	P13:B16,U(A) & U(B) & U(C)	P13:B16,U(A) & U(B) & U(C)	UNLOADER B(1):ALL P13	U=UNLOADER
			UNLOADER B(2):ALL P13	
			UNLOADER C(1):ALL P13	**DRAWING NUMBER:72X018 1**
			UNLOADER C(2):ALL P13	**PAGE 7 OF 7**
FOR EXPLANATION, SEE "HOW TO READ THE CONNECTOR CHART"				

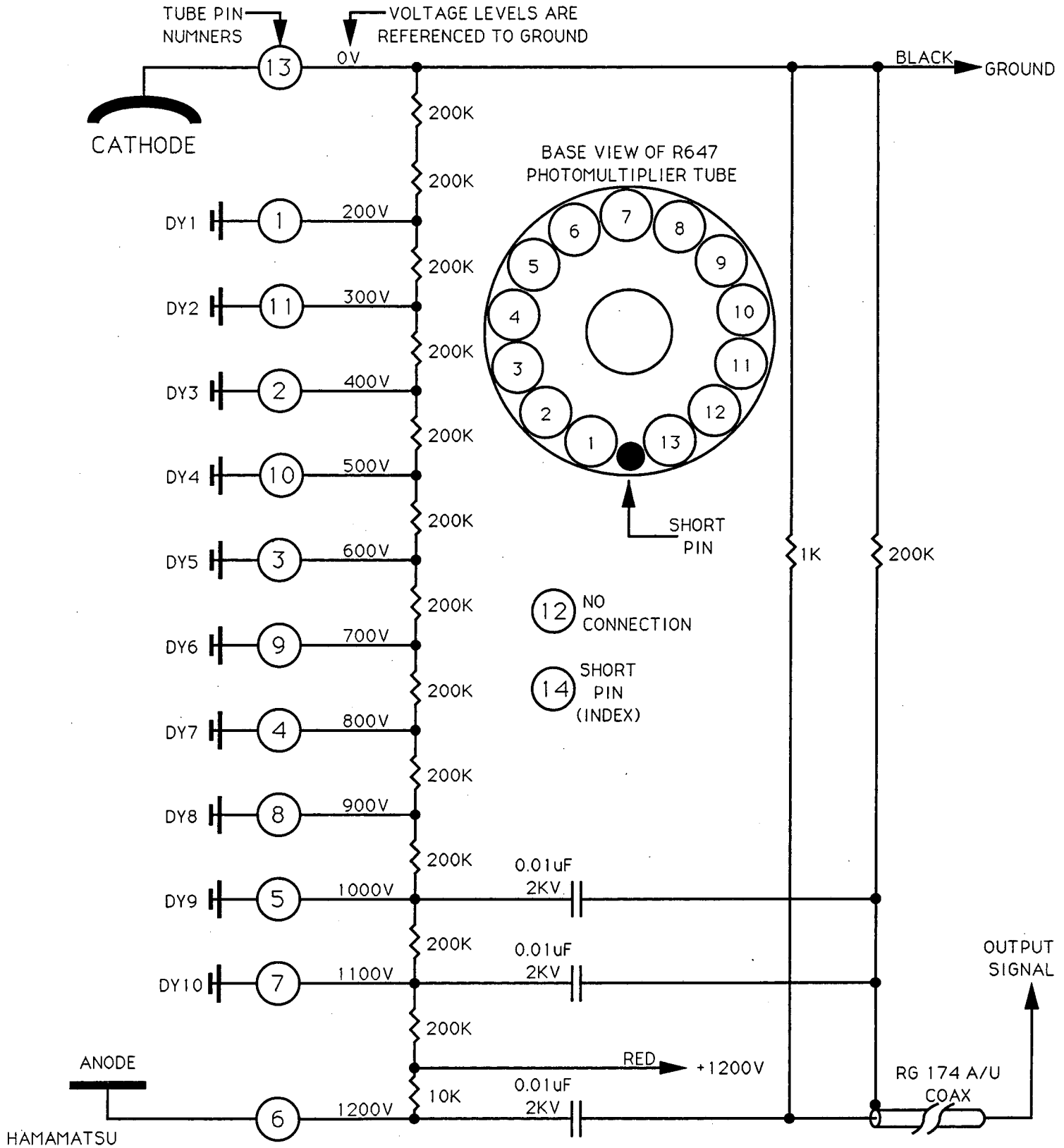

CONTRACT PET 600 TOMOGRAPH	LAWRENCE BERKELEY LABORATORY, RMRB DIV.
DR M.HO	PMT BASE
CHK	
ENG J. CAHOON	SIZE A / DWG NO. 72X017 1
APPD W. MOSES	
2/10/92	SHEET 1 OF 1

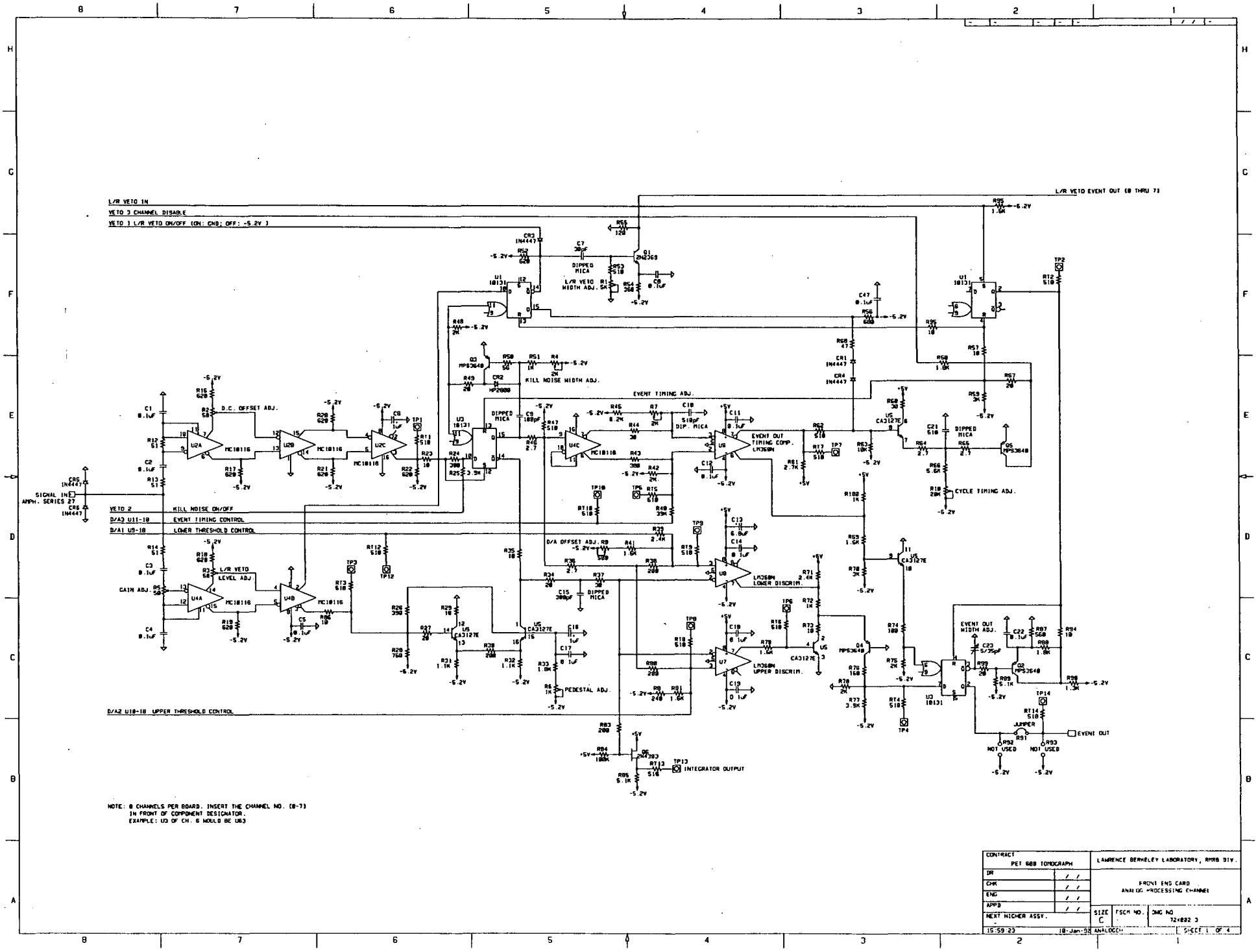
L/R VETO IN
VETO 3 CHANNEL DISABLE
VETO 1 L/R VETO ON/OFF (ON: GND; OFF: -5.2V)
L/R VETO EVENT OUT (0 THRU 7)
SIGNAL IN
AMPH. SERIES 27
VETO 2 KILL NOISE ON/OFF
D/A3 U11-18 EVENT TIMING CONTROL
D/A1 U9-18 LOWER THRESHOLD CONTROL
D/A2 U10-18 UPPER THRESHOLD CONTROL
D.C. OFFSET ADJ.
L/R VETO LEVEL ADJ.
GAIN ADJ.
KILL NOISE WIDTH ADJ.
EVENT TIMING ADJ.
EVENT OUT TIMING COMP. LM360N
CYCLE TIMING ADJ.
D/A OFFSET ADJ.
LM360N LOWER DISCRIM.
LM360N UPPER DISCRIM.
PEDESTAL ADJ.
INTEGRATOR OUTPUT
EVENT OUT WIDTH ADJ.
JUMPER
EVENT OUT
NOT USED
NOT USED
NOTE: 8 CHANNELS PER BOARD. INSERT THE CHANNEL NO. (0-7)
IN FRONT OF COMPONENT DESIGNATOR.
EXAMPLE: U3 OF CH. 6 WOULD BE U63
CONTRACT
PET 600 TOMOGRAPH
LAWRENCE BERKELEY LABORATORY, RMRB DIV.
DR
CHK
ENG
APPD
FRONT END CARD
ANALOG PROCESSING CHANNEL
NEXT HIGHER ASSY.
SIZE C
FSCM NO.
DWG NO 72X002 3
15:59:23
10-Jan-92
ANALOGCH
SHEET 1 OF 4

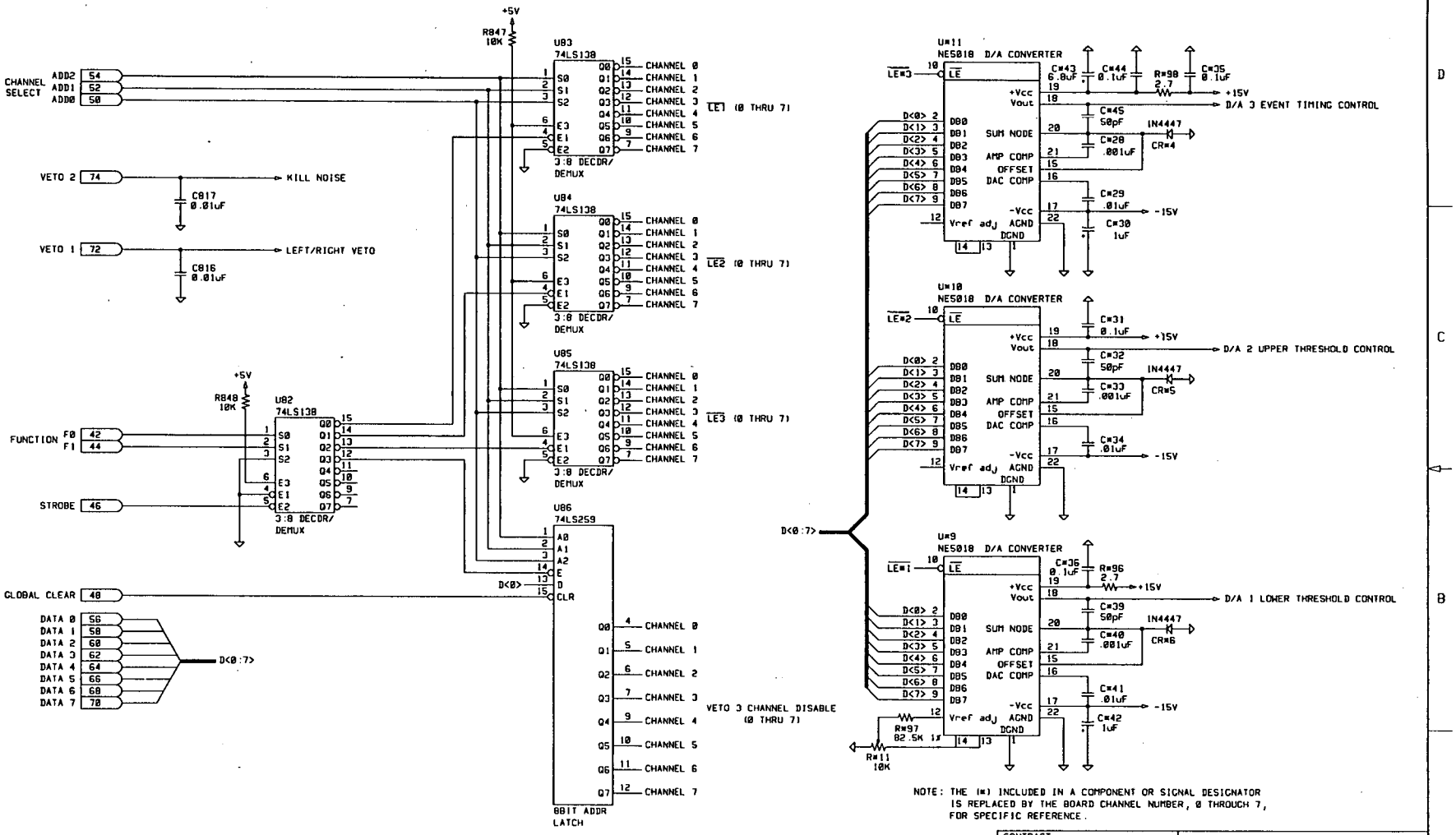
CHANNEL SELECT
ADD2 54
ADD1 52
ADD0 50
VETO 2 74
C817 0.01uF
KILL NOISE
VETO 1 72
C816 0.01uF
LEFT/RIGHT VETO
FUNCTION F0 42
F1 44
STROBE 46
GLOBAL CLEAR 48
DATA 0 56
DATA 1 58
DATA 2 60
DATA 3 62
DATA 4 64
DATA 5 66
DATA 6 68
DATA 7 70
D<0:7>
+5V
R847 10K
R848 10K
U82 74LS138
U83 74LS138
U84 74LS138
U85 74LS138
3:8 DECDR/ DEMUX
LE1 (0 THRU 7)
LE2 (0 THRU 7)
LE3 (0 THRU 7)
U86 74LS259
8BIT ADDR LATCH
D<0>
CHANNEL 0
CHANNEL 1
CHANNEL 2
CHANNEL 3
CHANNEL 4
CHANNEL 5
CHANNEL 6
CHANNEL 7
VETO 3 CHANNEL DISABLE (0 THRU 7)
U=11
U=10
U=9
NE5018 D/A CONVERTER
LE=3
LE=2
LE=1
+Vcc
Vout
-Vcc
Vref adj
AGND
DGND
SUM NODE
AMP COMP
OFFSET
DAC COMP
C=43 6.8uF
C=44 0.1uF
R=98 2.7
C=35 0.1uF
+15V
D/A 3 EVENT TIMING CONTROL
C=45 50pF
C=28 .001uF
IN4447
CR=4
C=29 .01uF
-15V
C=30 1uF
C=31 0.1uF
D/A 2 UPPER THRESHOLD CONTROL
C=32 50pF
C=33 .001uF
CR=5
C=34 .01uF
C=36 0.1uF
R=96 2.7
D/A 1 LOWER THRESHOLD CONTROL
C=39 50pF
C=40 .001uF
CR=6
C=41 .01uF
C=42 1uF
R=97 82.5K 1%
R=11 10K
D<0:7>
NOTE: THE (=) INCLUDED IN A COMPONENT OR SIGNAL DESIGNATOR IS REPLACED BY THE BOARD CHANNEL NUMBER, 0 THROUGH 7, FOR SPECIFIC REFERENCE.
CONTRACT
PET 600 TOMOGRAPH
LAWRENCE BERKELEY LABORATORY, RMRB DIV.
DR
CHK
ENG
APPD
FRONT END CARD
DAC AND CONTROL LOGIC
NEXT HIGHER ASSY.
SIZE C
FSCM NO. -
DWG NO. 72X002 3
16:04:44 10-Jan-92 FEDAC
SHEET 2 OF 4

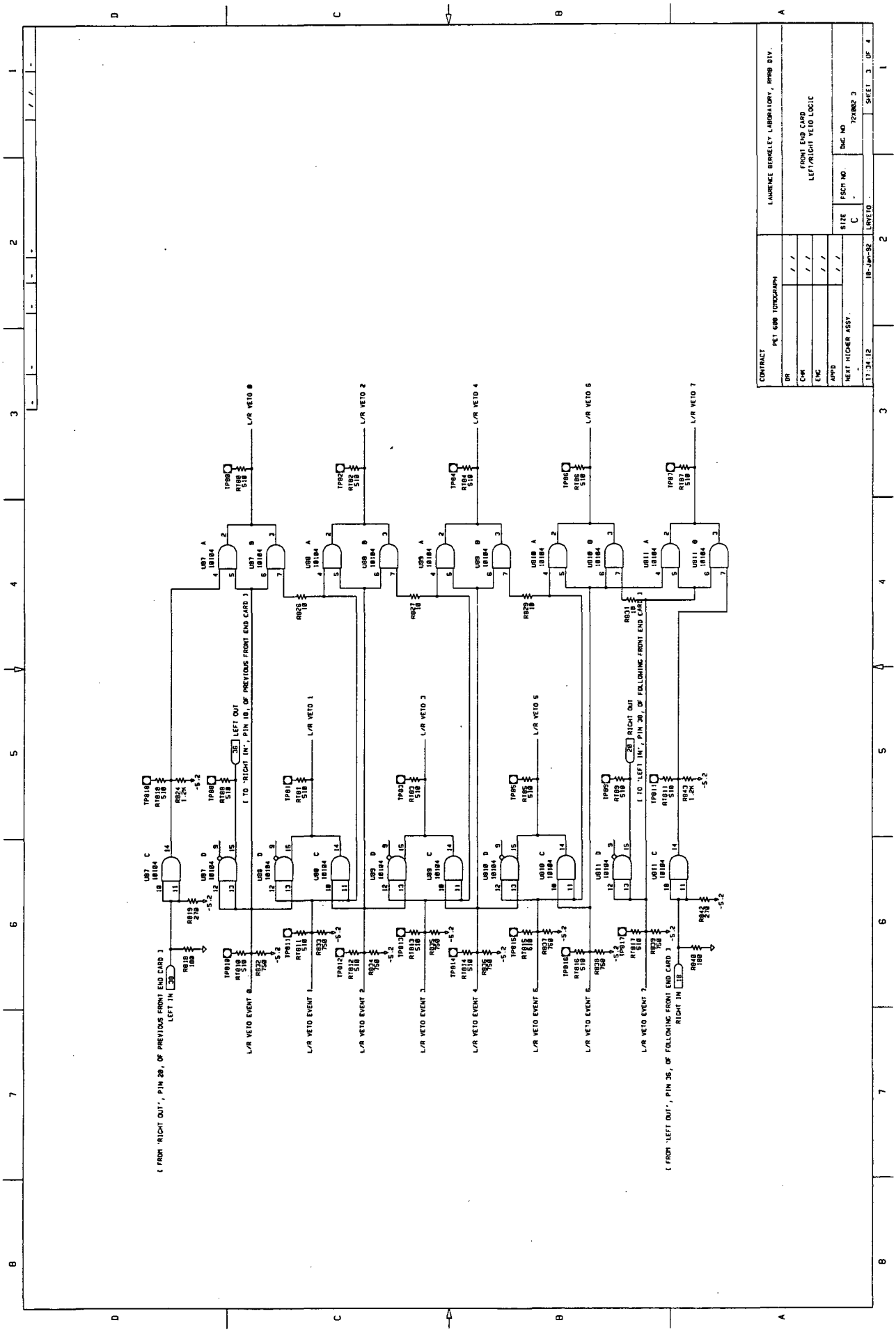
CONTRACT
PET 608 TOMOGRAPH
LAWRENCE BERKELEY LABORATORY, MMRB DIV.
DR
CHK
ENG
APPD
FRONT END CARD
LEFT/RIGHT VETO LOGIC
NEXT HIGHER ASSY:
SIZE
C
FSCM NO
DWG NO
724802 3
17:34:12
18-Jan-92
LRVETO
SHEET 3 OF 4
[FROM 'RIGHT OUT', PIN 20, OF PREVIOUS FRONT END CARD]
LEFT IN
[TO 'RIGHT IN', PIN 18, OF PREVIOUS FRONT END CARD]
LEFT OUT
[FROM 'LEFT OUT', PIN 36, OF FOLLOWING FRONT END CARD]
RIGHT IN
[TO 'LEFT IN', PIN 38, OF FOLLOWING FRONT END CARD]
RIGHT OUT
L/R VETO EVENT 0
L/R VETO EVENT 1
L/R VETO EVENT 2
L/R VETO EVENT 3
L/R VETO EVENT 4
L/R VETO EVENT 5
L/R VETO EVENT 6
L/R VETO EVENT 7
L/R VETO 0
L/R VETO 1
L/R VETO 2
L/R VETO 3
L/R VETO 4
L/R VETO 5
L/R VETO 6
L/R VETO 7

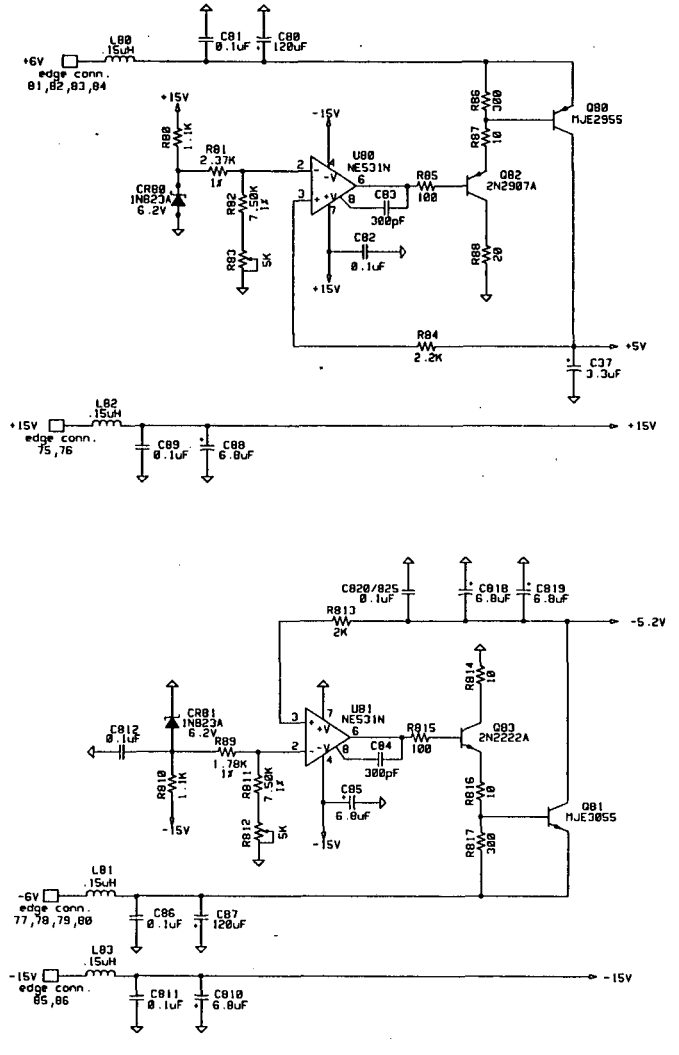

CONTRACT PET 600 TOMOGRAPH		LAWRENCE BERKELEY LABORATORY, RMRB DIV.	
DR	/ /	FRONT END CARD POWER SUPPLY[+/-15,+5,-5.2]	
CHK	/ /		
ENG	/ /		
APPD	/ /		
NEXT HIGHER ASSY. -		SIZE C	FSCM NO. -
		DWG NO. 72X002 3	
17:38:12	10-Jan-92 FEPWR	SHEET 4 OF 4	

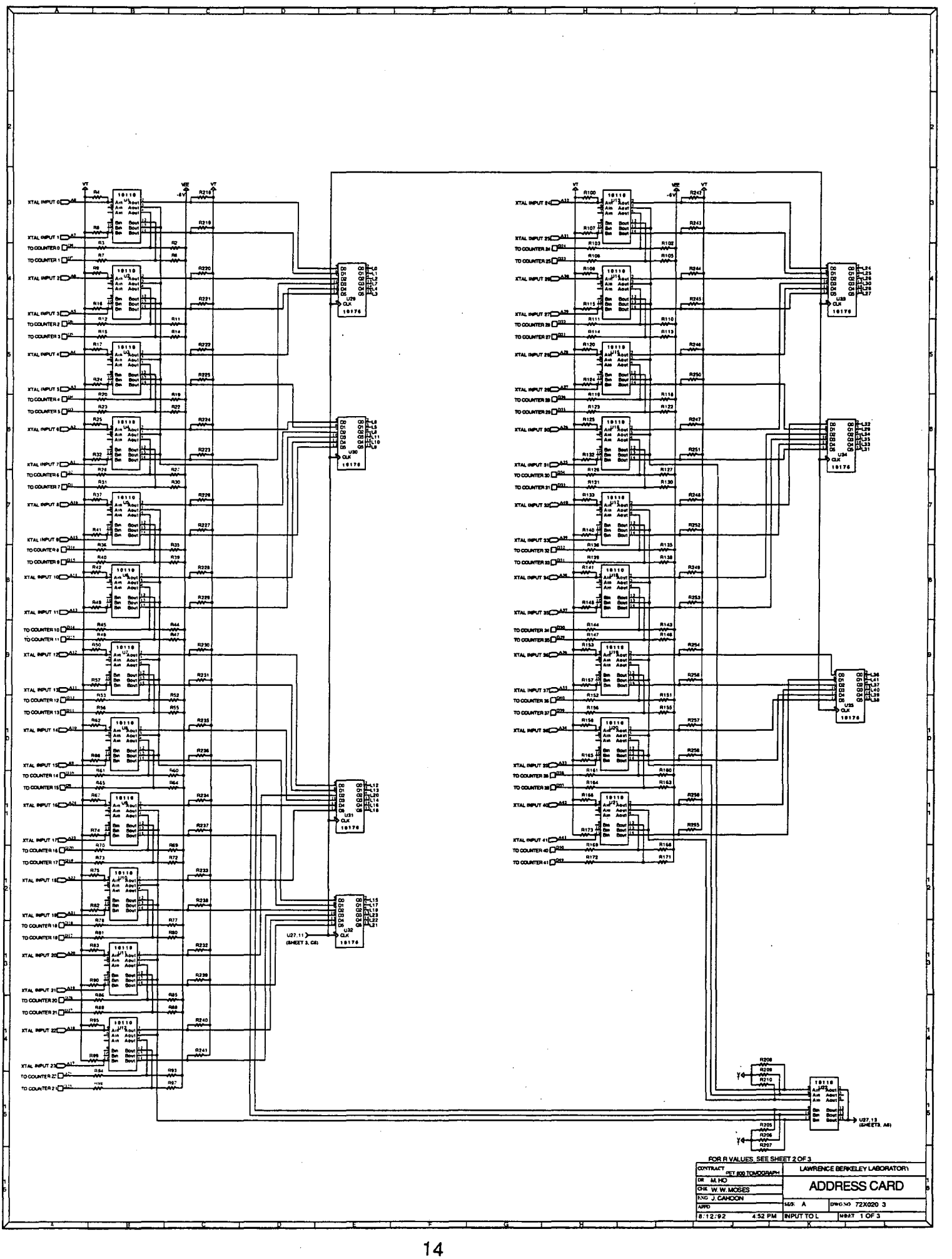
FOR R VALUES, SEE SHEET 2 OF 3
CONTRACT PET 600 TOMOGRAPH
LAWRENCE BERKELEY LABORATORY
DR M.HO
CHK W.W. MOSES
ENG J. CAHOON
APPD
ADDRESS CARD
SIZE A
DWG NO 72X020 3
8:12:92 4:52 PM
INPUT TO L
SHEET 1 OF 3

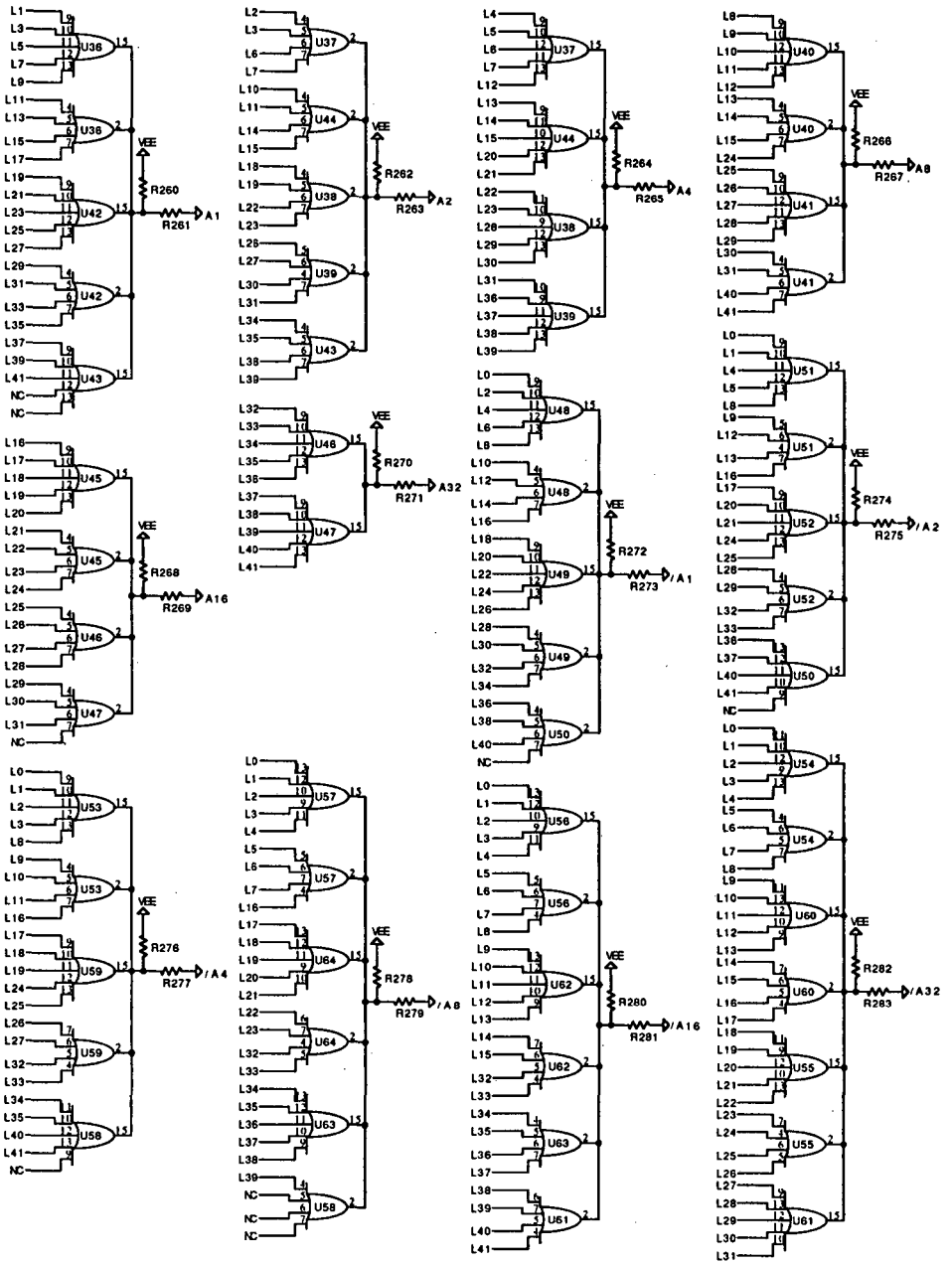

R#	VALUE	R#	VALUE	R#	VALUE	R#	VALUE	R#	VALUE	R#	VALUE	R#	VALUE
1	NC	51	NC	101	NC	151	510	201	0	251	100	301	62
2	510	52	510	102	510	152	51	202	0	252	100	302	62
3	51	53	51	103	51	153	100	203	0	253	100	303	62
4	100	54	NC	104	NC	154	NC	204	0	254	100	304	62
5	NC	55	510	105	510	155	510	205	100	255	100	305	62
6	510	56	51	106	51	156	51	206	100	256	100	306	62
7	51	57	100	107	100	157	100	207	100	257	100	307	62
8	100	58	NC	108	100	158	100	208	100	258	100	308	62
9	100	59	NC	109	NC	159	NC	209	100	259	100	309	62
10	NC	60	510	110	510	160	510	210	100	260	NC	310	62
11	510	61	51	111	51	161	51	211	62	261	0	311	62
12	51	62	100	112	NC	162	NC	212	62	262	NC	312	62
13	NC	63	NC	113	510	163	510	213	62	263	0	313	62
14	510	64	510	114	51	164	51	214	62	264	NC	314	62
15	51	65	51	115	100	165	100	215	62	265	0	315	62
16	100	66	100	116	NC	166	100	216	62	266	NC	316	62
17	100	67	100	117	NC	167	NC	217	62	267	0	317	62
18	NC	68	NC	118	510	168	510	218	100	268	NC	318	62
19	510	69	510	119	51	169	51	219	100	269	0	319	62
20	51	70	51	120	100	170	NC	220	100	270	NC	320	62
21	NC	71	NC	121	NC	171	510	221	100	271	0	321	62
22	510	72	510	122	510	172	51	222	100	272	NC	322	62
23	51	73	51	123	51	173	100	223	100	273	0	323	62
24	100	74	100	124	100	174	NC	224	100	274	NC	324	62
25	100	75	100	125	100	175	NC	225	100	275	0	325	62
26	NC	76	NC	126	NC	176	N/A	226	100	276	NC	326	62
27	510	77	510	127	510	177	N/A	227	100	277	0	327	62
28	51	78	51	128	51	178	N/A	228	100	278	NC	328	62
29	NC	79	NC	129	NC	179	N/A	229	100	279	0		
30	510	80	510	130	510	180	N/A	230	100	280	NC	333	62
31	51	81	51	131	51	181	N/A	231	100	281	0	334	62
32	100	82	100	132	100	182	N/A	232	100	282	NC	335	62
33	NC	83	100	133	100	183	N/A	233	100	283	0	336	100
34	NC	84	NC	134	NC	184	N/A	234	100	284	NC	337	100
35	510	85	510	135	510	185	N/A	235	100	285	0	338	100
36	51	86	51	136	51	186	N/A	236	100	286	270	339	100
37	100	87	NC	137	NC	187	N/A	237	100	287	62	340	100
38	NC	88	510	138	510	188	62	238	100	288	62	341	100
39	510	89	51	139	51	189	NC	239	100	289	62		
40	51	90	100	140	100	190	510	240	100	290	62	FROM U28	
41	100	91	NC	141	100	191	100	241	100	291	62	329	510
42	100	92	NC	142	NC	192	51	242	100	292	62	330	43
43	NC	93	510	143	510	193	62	243	100	293	62	331	43
44	510	94	51	144	51	194	62	244	100	294	62	332	510
45	51	95	100	145	NC	195	62	245	100	295	62		
46	NC	96	NC	146	510	196	62	246	100	296	62	FROM U65-U68	
47	510	97	510	147	51	197	62	247	100	297	62	329	62
48	51	98	51	148	100	198	62	248	100	298	62	330	62
49	100	99	100	149	NC	199	0	249	100	299	62	331	62
50	100	100	100	150	NC	200	0	250	100	300	62	332	62
ALL R ARE 1/4W CC													

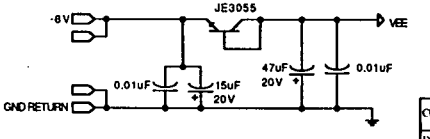

CONTRACT	PET 600 TOMOGRAPH	LAWRENCE BERKELEY LABORATORY, RMRB DIV.	
DR	M. HO	ADDRESS CARD	
CHK	W. W. MOSES		
ENG	J. CAHOON		
APPD		SIZE A	DWG NO. 72X020 2
8/12/92	4:56 PM	L TO A	SHEET 2 OF 3

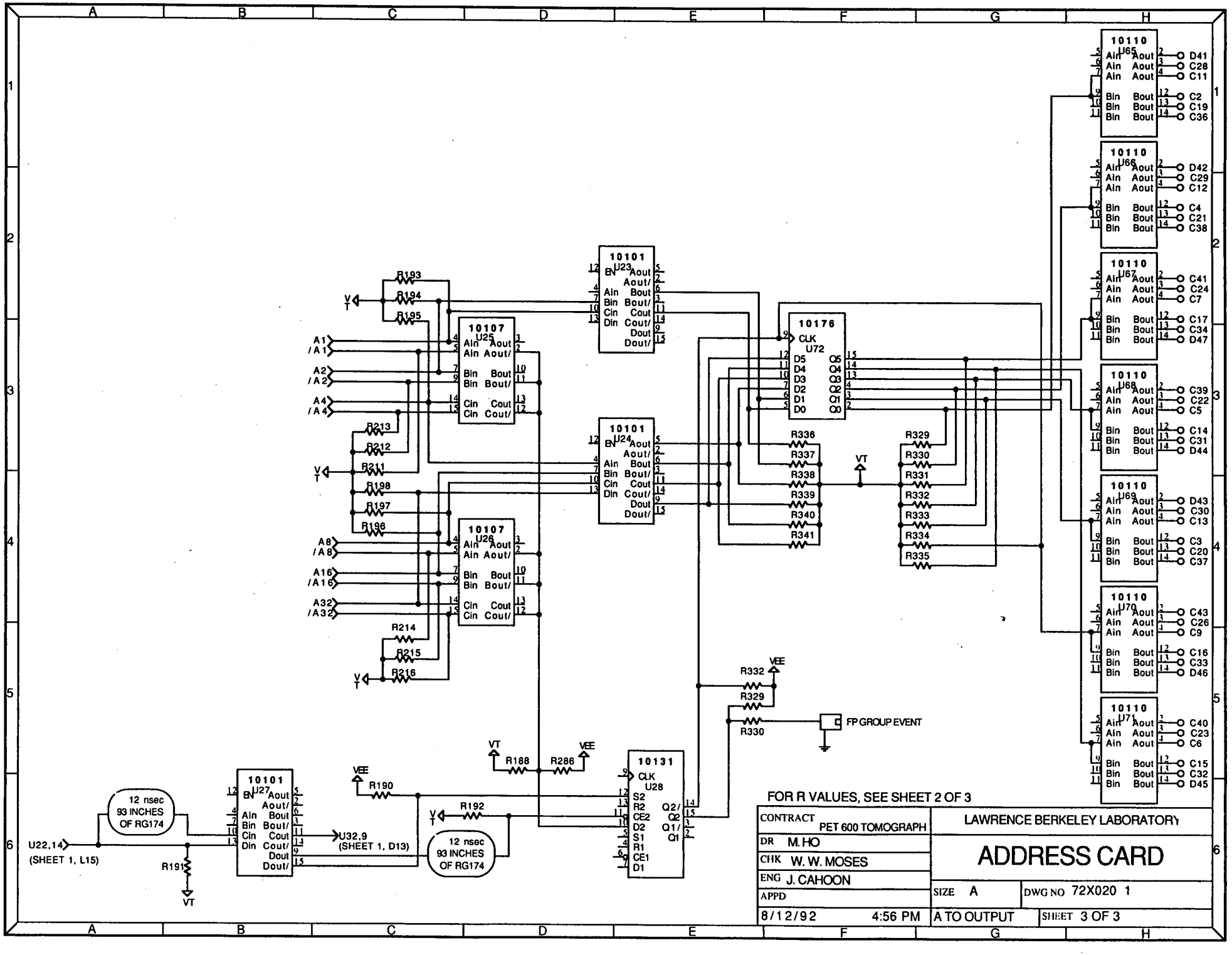
10110 U65 Ain Aout Ain Aout Ain Aout Bin Bout Bin Bout Bin Bout D41 C28 C11 C2 C19 C36
10110 U66 D42 C29 C12 C4 C21 C38
10110 U67 C41 C24 C7 C17 C34 D47
10110 U68 C39 C22 C5 C14 C31 D44
10110 U69 D43 C30 C13 C3 C20 C37
10110 U70 C43 C26 C9 C16 C33 D46
10110 U71 C40 C23 C6 C15 C32 D45
10101 U23 BN Aout Aout/ Ain Bout Bin Bout/ Cin Cout Din Cout/ Dout Dout/
10101 U24
10101 U27
10107 U25 Ain Aout Ain Aout/ Bin Bout Bin Bout/ Cin Cout Cin Cout/
10107 U26
10176 U72 CLK D5 D4 D3 D2 D1 D0 Q5 Q4 Q3 Q2 Q1 Q0
10131 U28 CLK S2 R2 CE2 D2 S1 R1 CE1 D1 Q2/ Q2 Q1/ Q1
R193 R194 R195 R213 R212 R211 R198 R197 R196 R214 R215 R216
R336 R337 R338 R339 R340 R341
R329 R330 R331 R332 R333 R334 R335
R188 R286 R190 R192 R191
A1 /A1 A2 /A2 A4 /A4 A8 /A8 A16 /A16 A32 /A32
VT VEE
FP GROUP EVENT
12 nsec 93 INCHES OF RG174
U22,14 (SHEET 1, L15)
U32,9 (SHEET 1, D13)
FOR R VALUES, SEE SHEET 2 OF 3
CONTRACT PET 600 TOMOGRAPH
LAWRENCE BERKELEY LABORATORY
DR M. HO
CHK W. W. MOSES
ENG J. CAHOON
APPD
ADDRESS CARD
SIZE A
DWG NO 72X020 1
8/12/92 4:56 PM
A TO OUTPUT
SHEET 3 OF 3

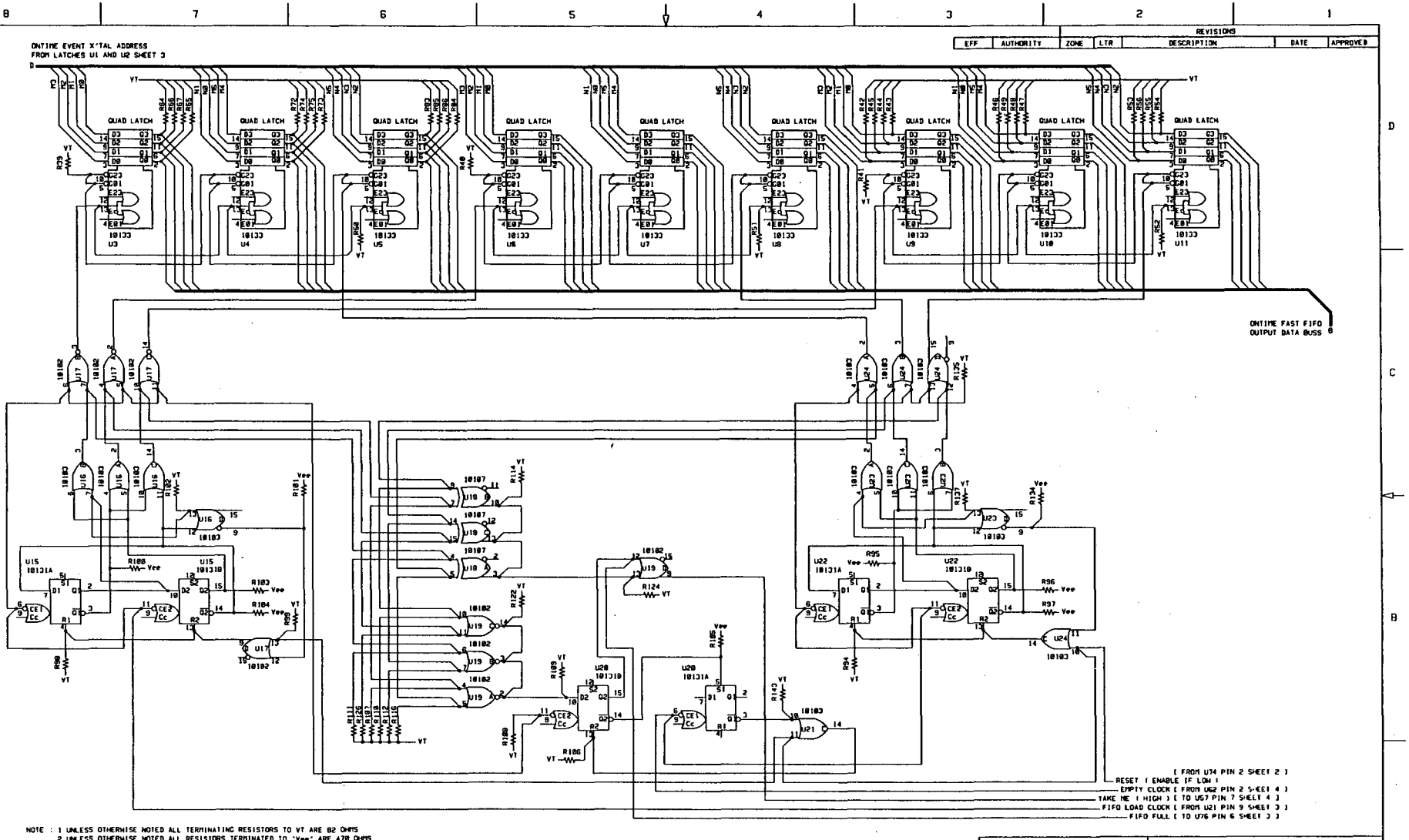

NOTE : 1 UNLESS OTHERWISE NOTED ALL TERMINATING RESISTORS TO VT ARE 82 OHMS
2 UNLESS OTHERWISE NOTED ALL RESISTORS TERMINATED TO 'Vee' ARE 470 OHMS

REVISIONS					
ECR	AUTHORITY	ZONE	LTR	DESCRIPTION	DATE	APPROVED

CONTRACT: PET 600 TOMOGRAPH	LAWRENCE BERKELEY LAB, MMRB DIV.
DR / /	COINCIDENCE CARD ONTIME FAST FIFO
CHK / /	
ENG / /	
APPD / /	
NEXT HIGHER ASSY: -	SIZE: C · FSCM NO.: - · DWG NO.: 72X084 3
12:52:02 16-Jan-92	ONFIFO · SHEET 1 OF 5

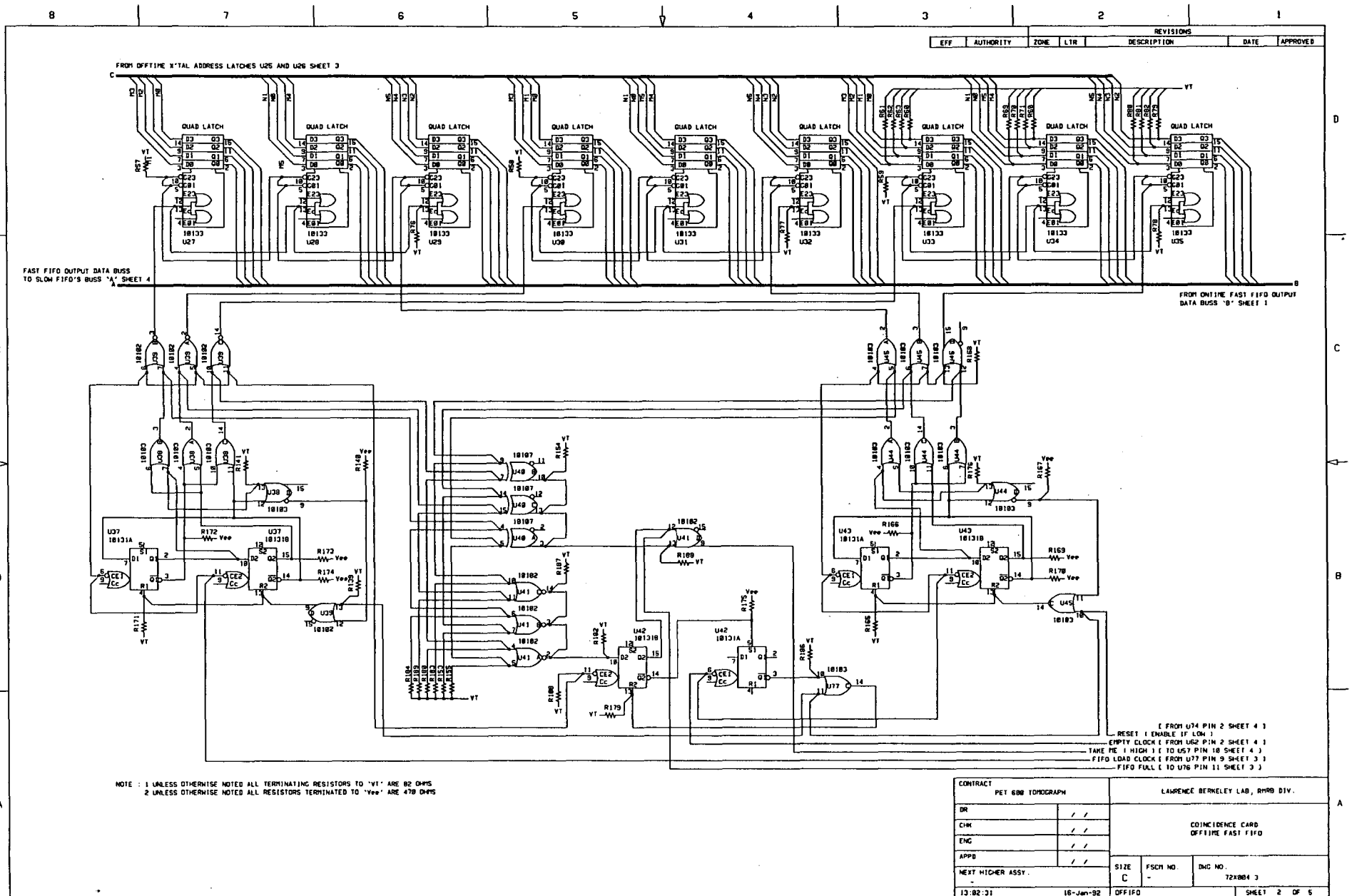
REVISIONS
EFF | AUTHORITY | ZONE | LTR | DESCRIPTION | DATE | APPROVED
FROM OFFTIME X'TAL ADDRESS LATCHES U25 AND U26 SHEET 3
QUAD LATCH
U27
U28
U29
U30
U31
U32
U33
U34
U35
FAST FIFO OUTPUT DATA BUSS TO SLOW FIFO'S BUSS 'A' SHEET 4
FROM OFFTIME FAST FIFO OUTPUT DATA BUSS 'B' SHEET 1
[FROM U74 PIN 2 SHEET 4]
RESET (ENABLE IF LOW)
EMPTY CLOCK (FROM U62 PIN 2 SHEET 4)
TAKE ME (HIGH) (TO U57 PIN 10 SHEET 4)
FIFO LOAD CLOCK (FROM U77 PIN 9 SHEET 3)
FIFO FULL (TO U76 PIN 11 SHEET 3)
NOTE : 1 UNLESS OTHERWISE NOTED ALL TERMINATING RESISTORS TO 'VT' ARE 82 OHMS
2 UNLESS OTHERWISE NOTED ALL RESISTORS TERMINATED TO 'Vee' ARE 470 OHMS
CONTRACT
PET 600 TOMOGRAPH
LAWRENCE BERKELEY LAB, RMRB DIV.
DR
CHK
ENG
APPD
NEXT HIGHER ASSY.
COINCIDENCE CARD
OFFTIME FAST FIFO
SIZE C
FSCM NO. -
DWG NO. 72X004 3
13:02:31 16-Jan-92
OFFIFO
SHEET 2 OF 5

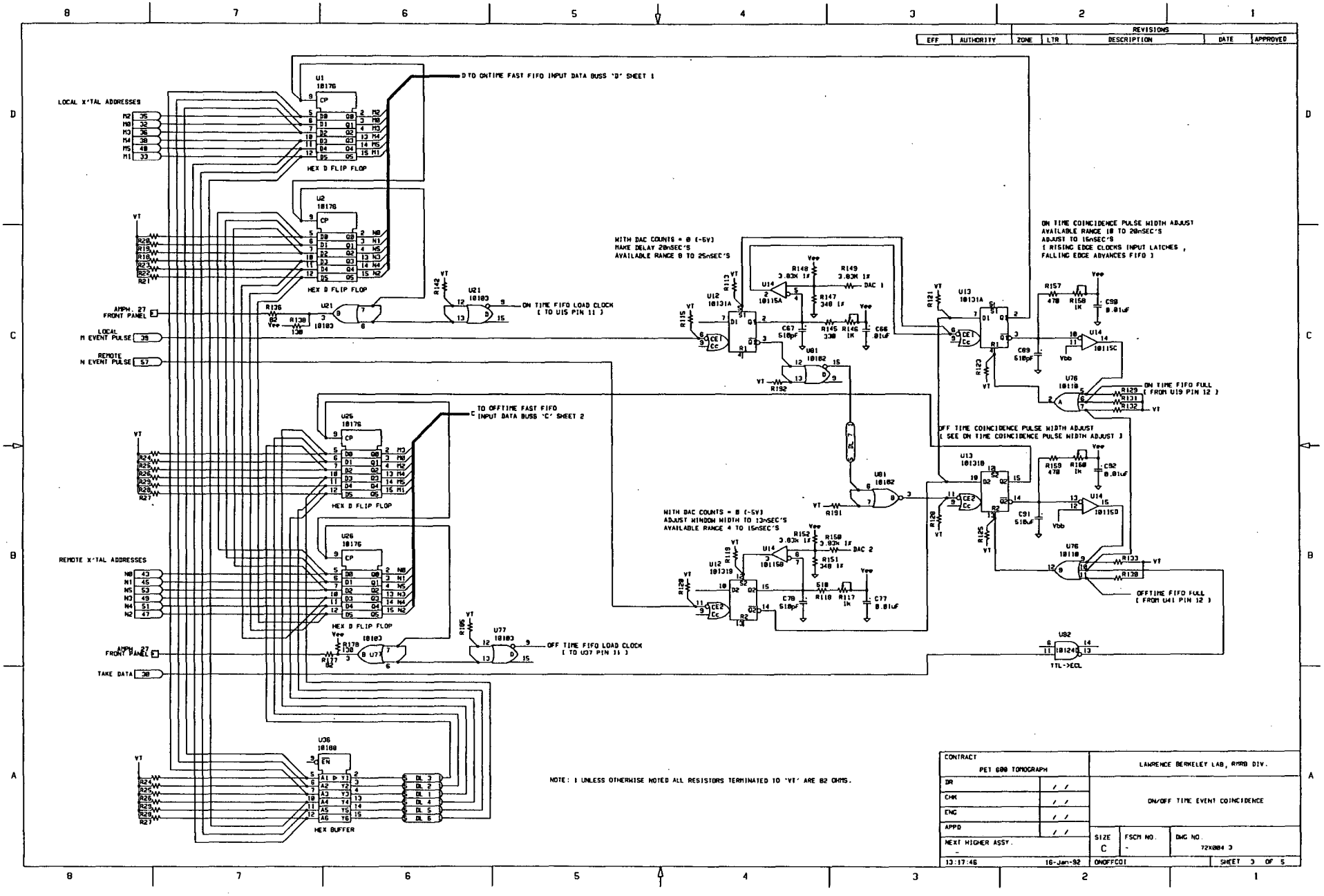
REVISIONS
EFF
AUTHORITY
ZONE
LTR
DESCRIPTION
DATE
APPROVED
LOCAL X'TAL ADDRESSES
D TO ONTIME FAST FIFO INPUT DATA BUSS 'D' SHEET 1
HEX D FLIP FLOP
AMPH. 27 FRONT PANEL
LOCAL M EVENT PULSE
REMOTE N EVENT PULSE
ON TIME FIFO LOAD CLOCK (TO U15 PIN 11)
WITH DAC COUNTS = 0 (-5V) MAKE DELAY 20nSEC'S AVAILABLE RANGE 0 TO 25nSEC'S
ON TIME COINCIDENCE PULSE WIDTH ADJUST AVAILABLE RANGE 10 TO 20nSEC'S ADJUST TO 15nSEC'S (RISING EDGE CLOCKS INPUT LATCHES , FALLING EDGE ADVANCES FIFO)
ON TIME FIFO FULL (FROM U19 PIN 12)
TO OFFTIME FAST FIFO INPUT DATA BUSS 'C' SHEET 2
OFF TIME COINCIDENCE PULSE WIDTH ADJUST (SEE ON TIME COINCIDENCE PULSE WIDTH ADJUST)
WITH DAC COUNTS = 0 (-5V) ADJUST WINDOW WIDTH TO 13nSEC'S AVAILABLE RANGE 4 TO 15nSEC'S
REMOTE X'TAL ADDRESSES
OFFTIME FIFO FULL (FROM U41 PIN 12)
OFF TIME FIFO LOAD CLOCK (TO U37 PIN 11)
TAKE DATA
TTL->ECL
HEX BUFFER
NOTE: 1 UNLESS OTHERWISE NOTED ALL RESISTORS TERMINATED TO 'VT' ARE 82 OHMS.
CONTRACT
PET 600 TOMOGRAPH
LAWRENCE BERKELEY LAB, RMRB DIV.
DR
CHK
ENG
APPD
ON/OFF TIME EVENT COINCIDENCE
NEXT HIGHER ASSY.
SIZE
C
FSCM NO.
DWG NO.
72X004 3
13:17:46
16-Jan-92
ONOFFCOI
SHEET 3 OF 5

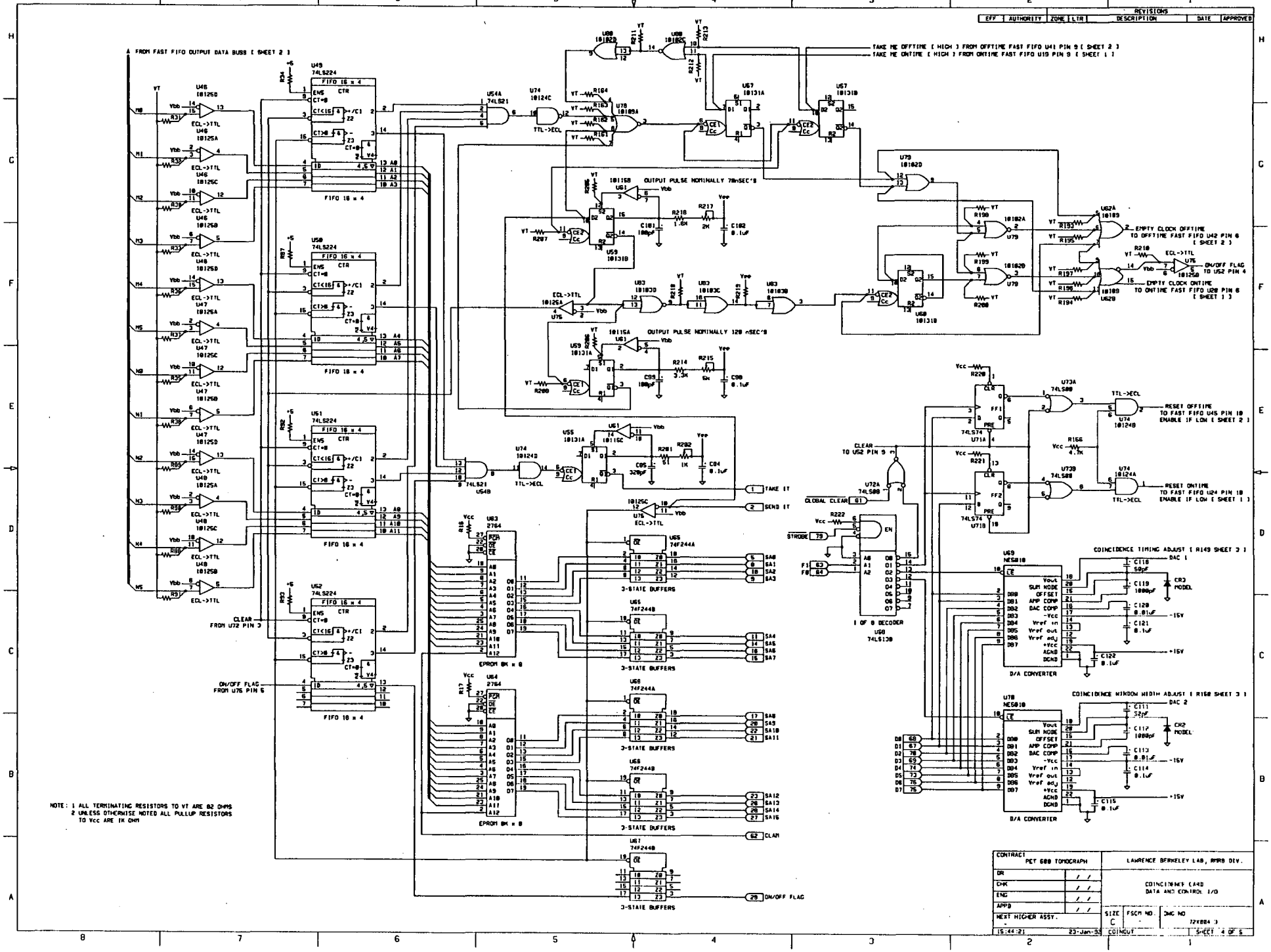
REVISIONS
EFF | AUTHORITY | ZONE | LTR | DESCRIPTION | DATE | APPROVED
FROM FAST FIFO OUTPUT DATA BUSS [SHEET 2]
TAKE ME OFFTIME [HIGH] FROM OFFTIME FAST FIFO U41 PIN 9 [SHEET 2]
TAKE ME ONTIME [HIGH] FROM ONTIME FAST FIFO U19 PIN 9 [SHEET 1]
OUTPUT PULSE NOMINALLY 70nSEC'S
OUTPUT PULSE NOMINALLY 120 nSEC'S
EMPTY CLOCK OFFTIME TO OFFTIME FAST FIFO U42 PIN 6 [SHEET 2]
ON/OFF FLAG TO U52 PIN 4
EMPTY CLOCK ONTIME TO ONTIME FAST FIFO U20 PIN 6 [SHEET 1]
RESET OFFTIME TO FAST FIFO U45 PIN 10 ENABLE IF LOW [SHEET 2]
RESET ONTIME TO FAST FIFO U24 PIN 10 ENABLE IF LOW [SHEET 1]
CLEAR TO U52 PIN 9
CLEAR FROM U72 PIN 3
ON/OFF FLAG FROM U75 PIN 5
TAKE IT
SEND IT
CLAM
ON/OFF FLAG
GLOBAL CLEAR
STROBE
1 OF 8 DECODER
3-STATE BUFFERS
EPROM 8K x 8
COINCIDENCE TIMING ADJUST [R149 SHEET 3]
COINCIDENCE WINDOW WIDTH ADJUST [R150 SHEET 3]
D/A CONVERTER
NOTE: 1 ALL TERMINATING RESISTORS TO VT ARE 82 OHMS
2 UNLESS OTHERWISE NOTED ALL PULLUP RESISTORS TO Vcc ARE 1K OHM
CONTRACT PET 600 TOMOGRAPH
LAWRENCE BERKELEY LAB, RMRB DIV.
COINCIDENCE CARD DATA AND CONTROL I/O
DR
CHK
ENG
APPD
NEXT HIGHER ASSY.
SIZE C
FSCM NO.
DWG NO 72K884 3
15:44:21
23-Jan-93
COINOUT
SHEET 4 OF 5

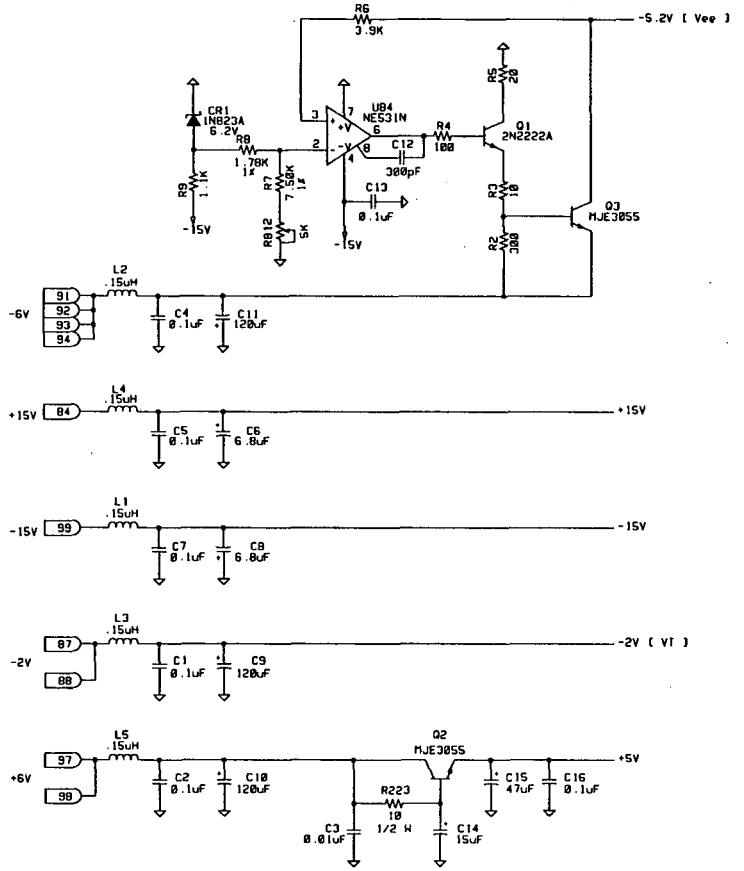

CONTRACT PET 600 TOMOGRAPH		LAWRENCE BERKELEY LABORATORY, RMRB DIV.	
DR	/ /	COINCIDENCE CARD POWER (+/-15,+5,-5.2,-2)	
CHK	/ /		
ENG	/ /		
APPD	/ /		
NEXT HIGHER ASSY. -		SIZE C	FSCM NO. -
19:05:00	10-Jan-92	COINPWR	SHEET 5 OF 5

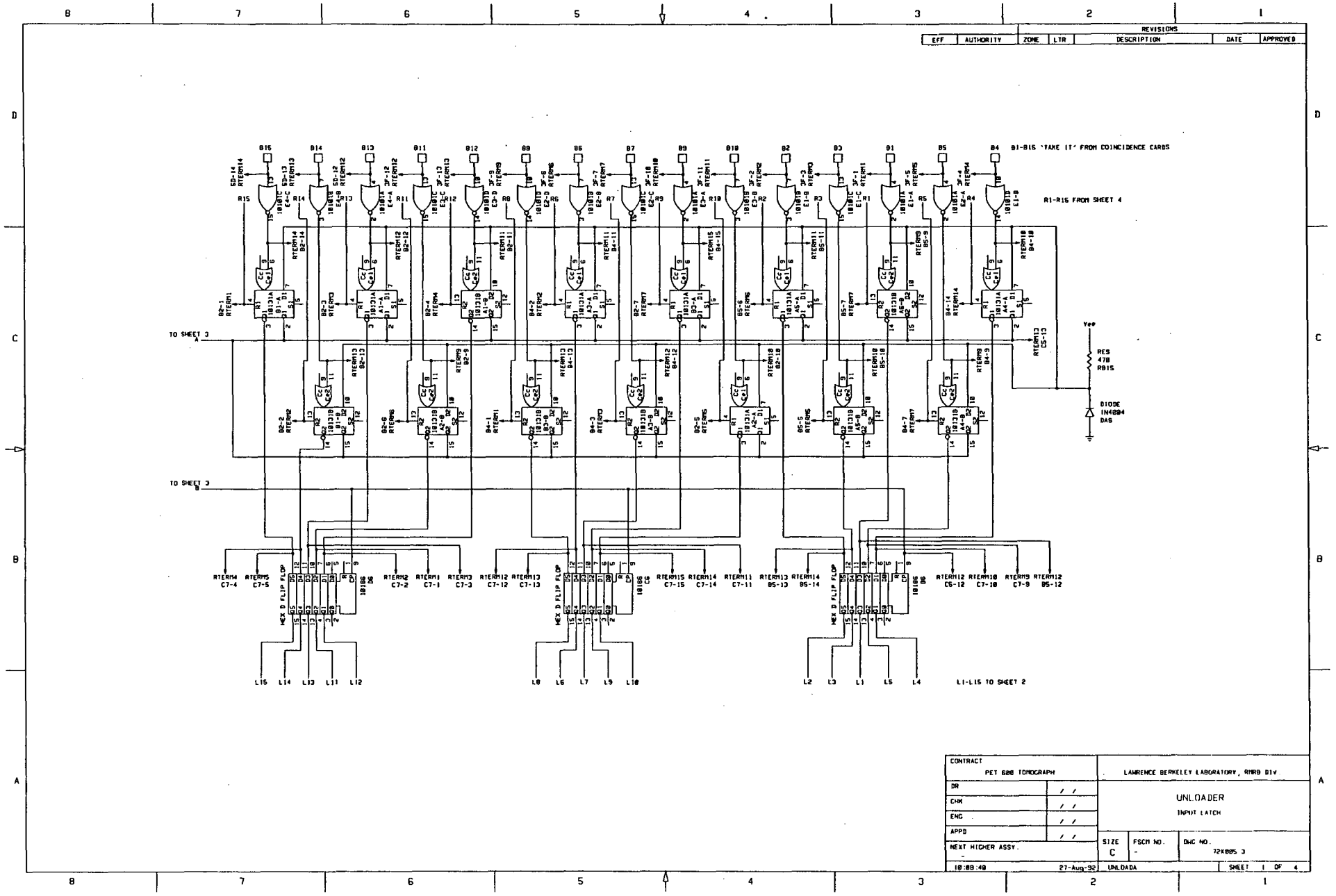
REVISIONS
EFF
AUTHORITY
ZONE
LTR
DESCRIPTION
DATE
APPROVED
B1-B15 'TAKE IT' FROM COINCIDENCE CARDS
R1-R15 FROM SHEET 4
TO SHEET 3
TO SHEET 3
RES 470 R815
DIODE 1N4004 DA6
HEX D FLIP FLOP
L1-L15 TO SHEET 2
CONTRACT
PET 600 TOMOGRAPH
LAWRENCE BERKELEY LABORATORY, RMRB DIV.
DR
CHK
ENG
APPD
NEXT HIGHER ASSY.
UNLOADER
INPUT LATCH
SIZE
C
FSCM NO.
DWG NO.
72K005 3
10:08:40
27-Aug-92
UNLOADA
SHEET 1 OF 4

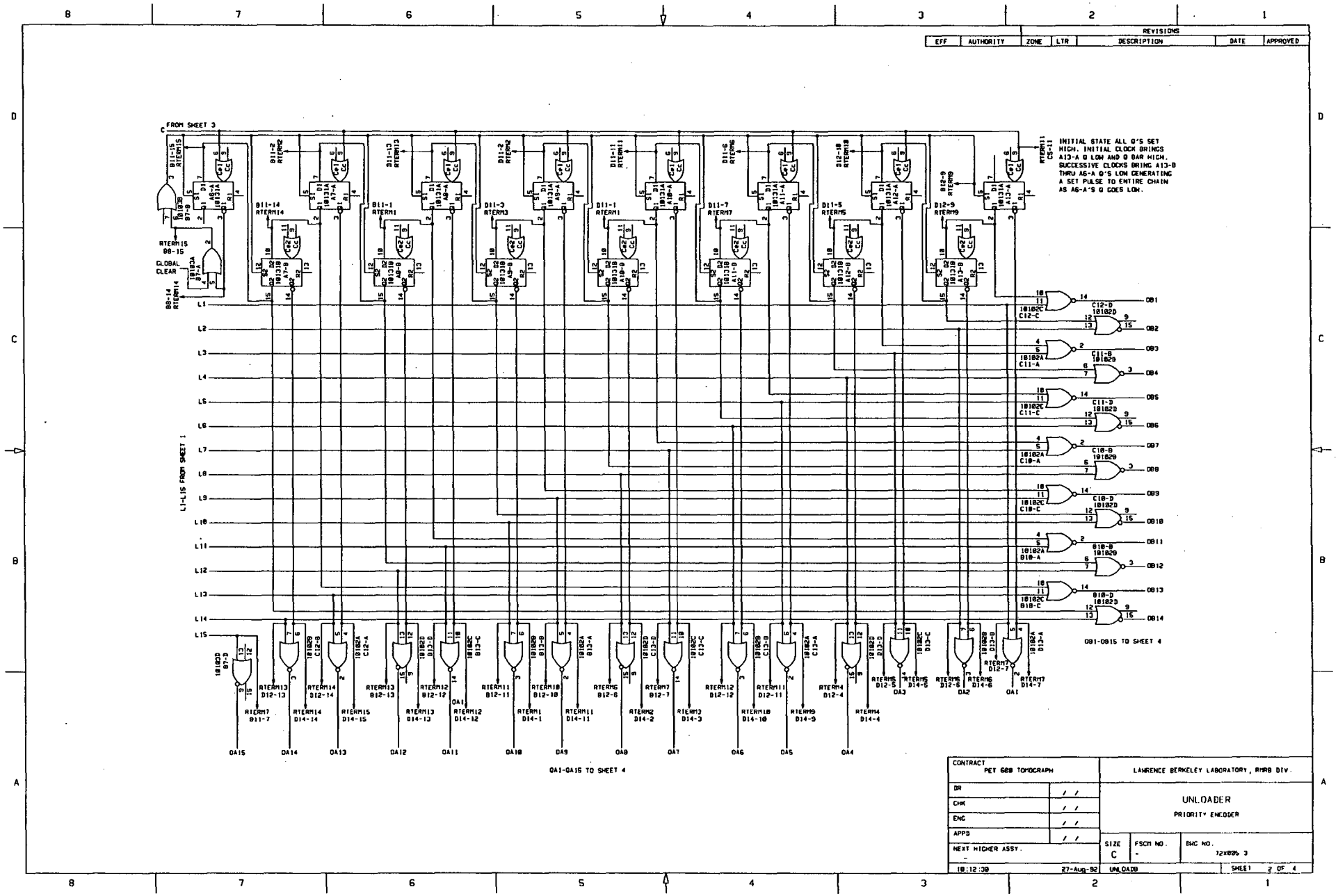
REVISIONS
EFF
AUTHORITY
ZONE
LTR
DESCRIPTION
DATE
APPROVED
FROM SHEET 3
INITIAL STATE ALL Q'S SET HIGH. INITIAL CLOCK BRINGS A13-A Q LOW AND Q BAR HIGH. SUCCESSIVE CLOCKS BRING A13-B THRU A6-A Q'S LOW GENERATING A SET PULSE TO ENTIRE CHAIN AS A6-A'S Q GOES LOW.
GLOBAL CLEAR
L1-L15 FROM SHEET 1
OB1-OB15 TO SHEET 4
OA1-OA15 TO SHEET 4
CONTRACT
PET 600 TOMOGRAPH
LAWRENCE BERKELEY LABORATORY, RMRB DIV.
UNLOADER
PRIORITY ENCODER
DR
CHK
ENG
APPD
NEXT HIGHER ASSY.
SIZE
C
FSCM NO.
DWG NO.
72X005 3
10:12:30
27-Aug-92
UNLOADB
SHEET 2 OF 4

REVISIONS						
ECF	AUTHORITY	ZONE	LTR	DESCRIPTION	DATE	APPROVED

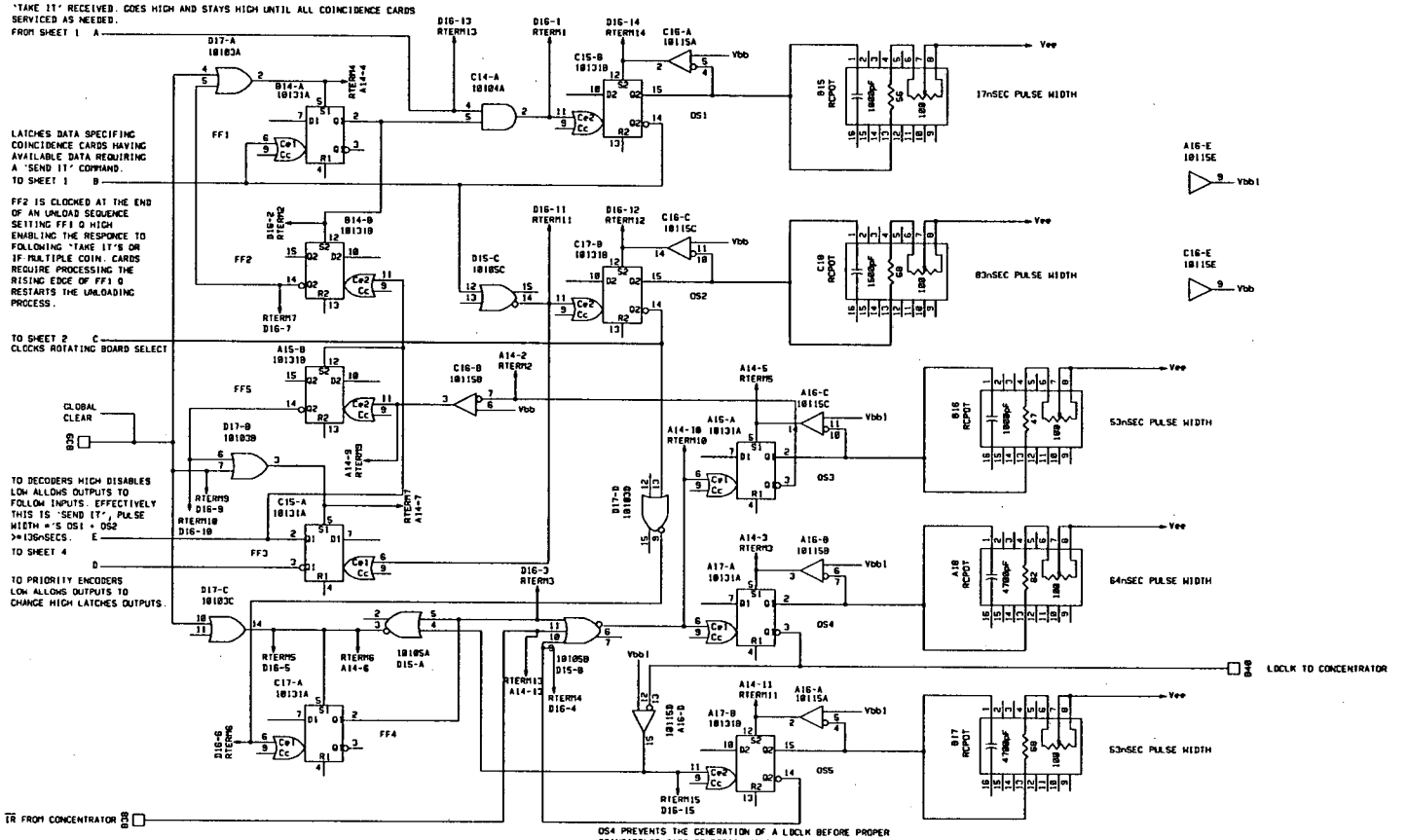

CONTRACT: PET 600 TOMOGRAPH		LAWRENCE BERKELEY LABORATORY, RMRB DIV.	
DR	/ /	UNLOADER	
CHK	/ /	ONE SHOTS	
ENG	/ /		
APPD	/ /		
NEXT HIGHER ASSY. -		SIZE C	FSCM NO. -
10:16:42	27-Aug-92	UNLOADC	SHEET 3 OF 4

REVISIONS					
EFF	AUTHORITY	ZONE	LTR	DESCRIPTION	DATE	APPROVED

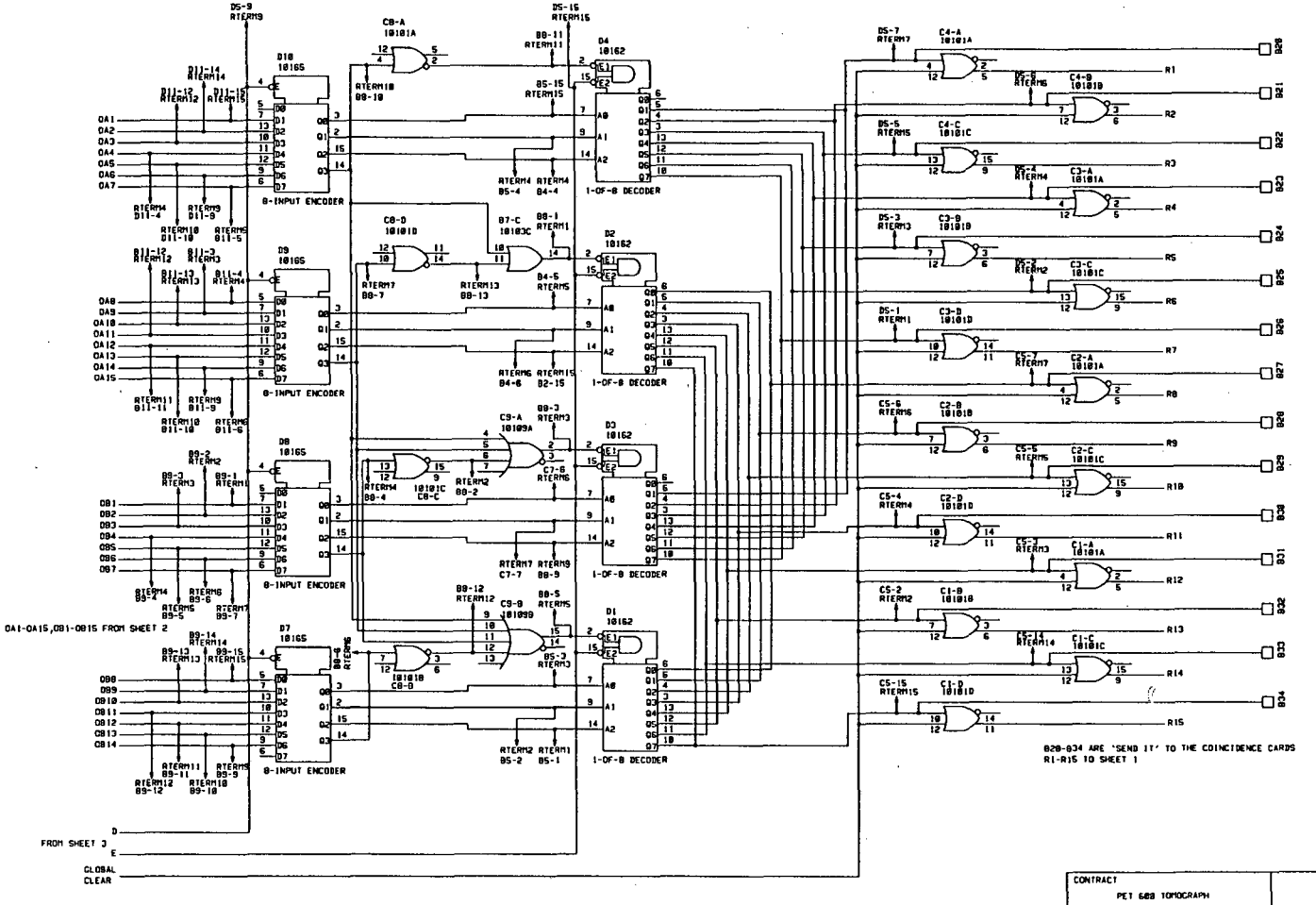

CONTRACT: PET 608 TOMOGRAPH		LAWRENCE BERKELEY LABORATORY, MMB DIV	
DR	/ /	UNLOADER	
CHK	/ /	CONCENTRATOR CARD SELECT	
ENG	/ /		
APPD	/ /		
NEXT HIGHER ASSY: -		SIZE: C	FSCM NO: -
13:57:34	27-Aug-92	UNLOADD	SHEET 4 OF 4

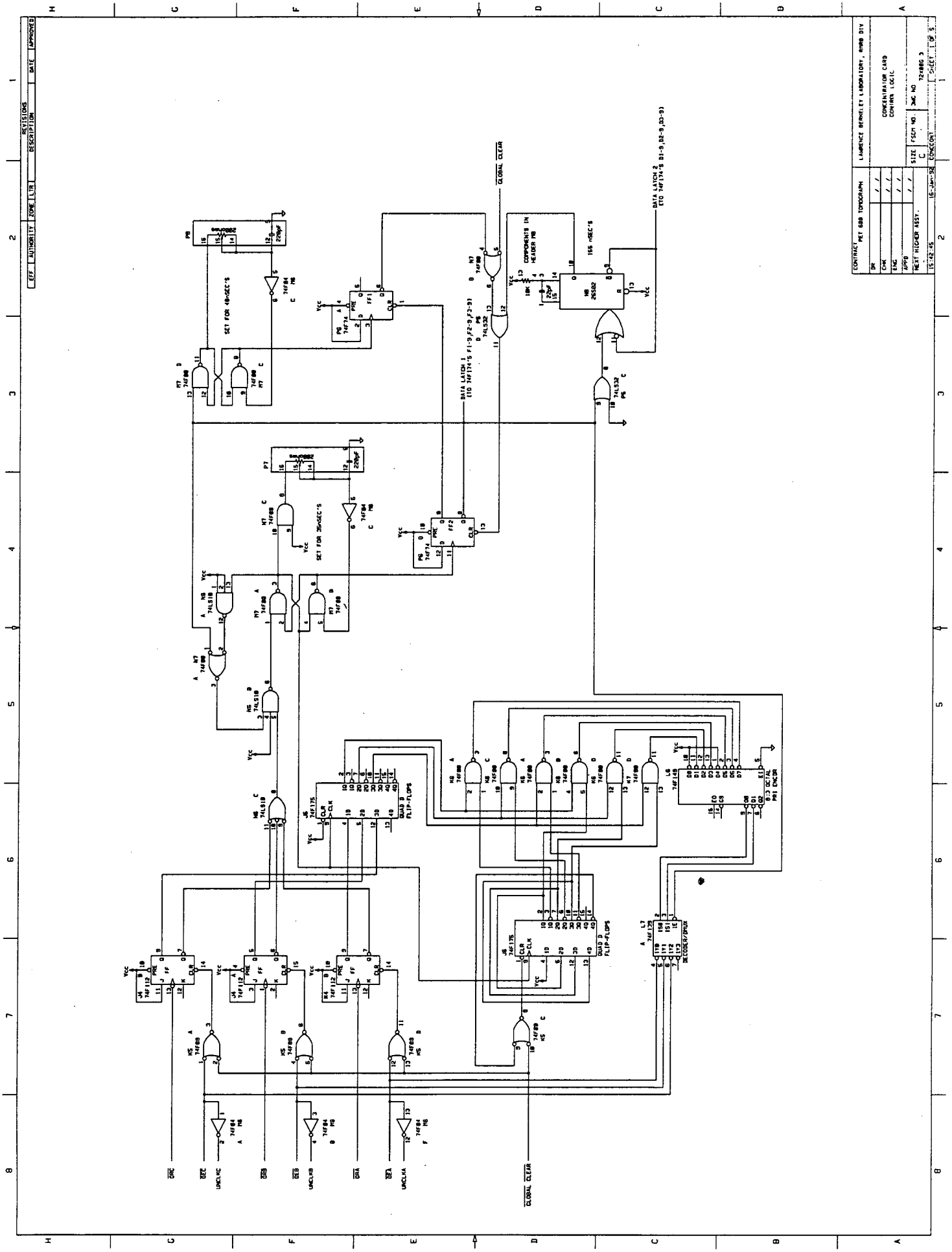

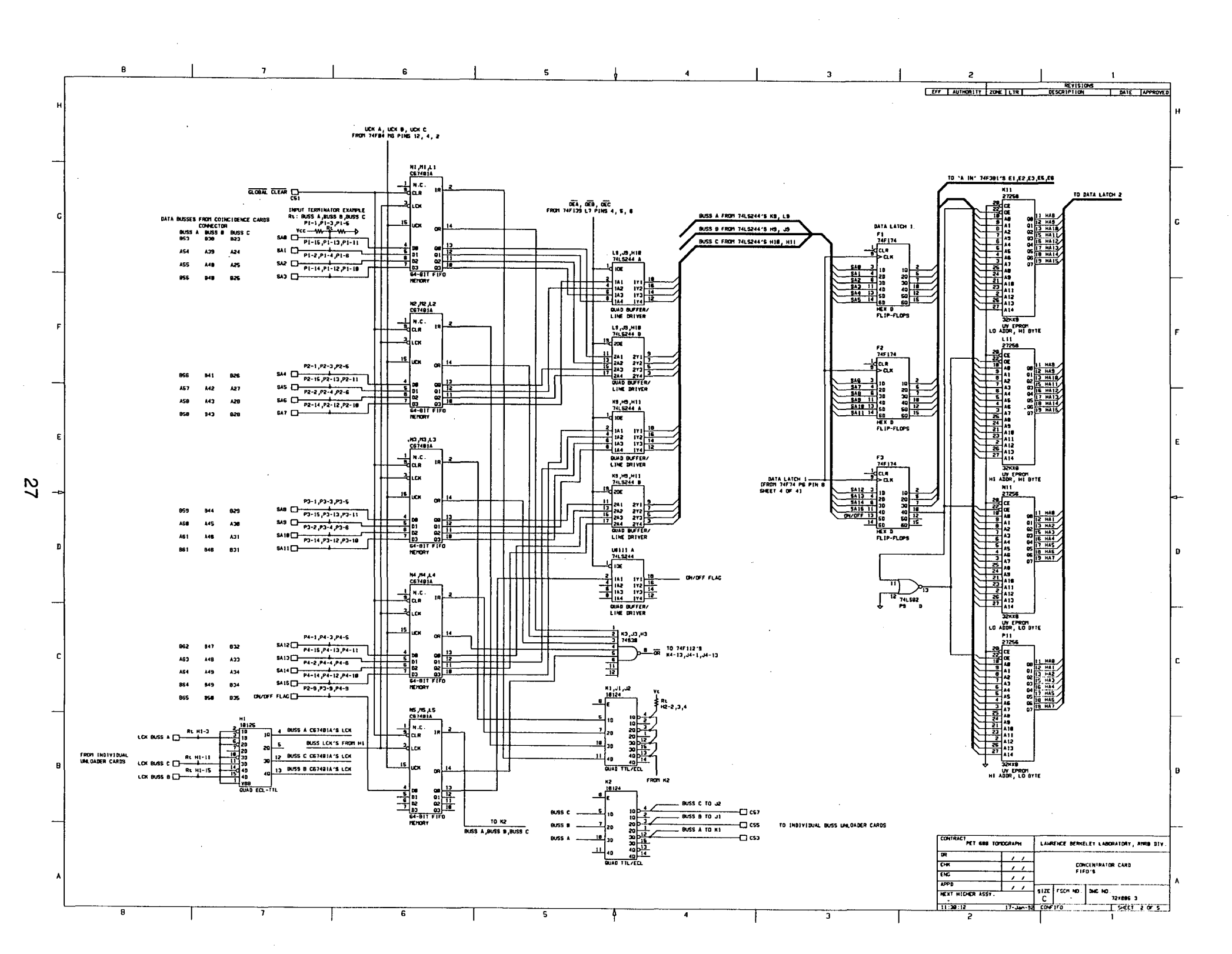
REVISIONS
EFF | AUTHORITY | ZONE | LTR | DESCRIPTION | DATE | APPROVED
UCK A, UCK B, UCK C
FROM 74FB4 M8 PINS 12, 4, 2
GLOBAL CLEAR
C61
INPUT TERMINATOR EXAMPLE
Rt: BUSS A,BUSS B,BUSS C
P1-1,P1-3,P1-5
Vcc
Rt
DATA BUSSES FROM COINCIDENCE CARDS
CONNECTOR
BUSS A BUSS B BUSS C
B53 B38 B23
A54 A39 A24
A55 A40 A25
B56 B40 B26
B56 B41 B26
A57 A42 A27
A58 A43 A28
B58 B43 B28
B59 B44 B29
A58 A45 A30
A61 A46 A31
B61 B46 B31
B62 B47 B32
A63 A48 A33
A64 A49 A34
B64 B49 B34
B65 B50 B35
P1-15,P1-13,P1-11
P1-2,P1-4,P1-6
P1-14,P1-12,P1-10
P2-15,P2-13,P2-11
P2-2,P2-4,P2-6
P2-14,P2-12,P2-10
P3-15,P3-13,P3-11
P3-2,P3-4,P3-6
P3-14,P3-12,P3-10
P4-15,P4-13,P4-11
P4-2,P4-4,P4-6
P4-14,P4-12,P4-10
P2-9,P3-9,P4-9
ON/OFF FLAG
SA0
SA1
SA2
SA3
SA4
SA5
SA6
SA7
SA8
SA9
SA10
SA11
SA12
SA13
SA14
SA15
M1,M1,L1
M2,M2,L2
M3,M3,L3
M4,M4,L4
M5,M5,L5
CS7481A
N.C.
CLR
LCK
UCK
IR
OR
D0
D1
D2
D3
Q0
Q1
Q2
Q3
64-BIT FIFO
MEMORY
H1
10125
QUAD ECL-TTL
Rt H1-3
Rt H1-11
Rt H1-15
LCK BUSS A
LCK BUSS C
LCK BUSS B
FROM INDIVIDUAL UNLOADER CARDS
BUSS A CS7481A'S LCK
BUSS LCK'S FROM H1
BUSS C CS7481A'S LCK
BUSS B CS7481A'S LCK
TO K2
BUSS A,BUSS B,BUSS C
DEA, DEB, DEC
FROM 74F139 L7 PINS 4, 5, 6
L8,J8,H10
L9,J9,H10
K8,H8,H11
K9,H9,H11
74LS244 A
74LS244 B
1OE
2OE
1A1 1A2 1A3 1A4
1Y1 1Y2 1Y3 1Y4
2A1 2A2 2A3 2A4
2Y1 2Y2 2Y3 2Y4
QUAD BUFFER/
LINE DRIVER
U8111 A
ON/OFF FLAG
K3,J3,H3
74S38
TO 74F112'S
K4-13,J4-1,J4-13
K1,J1,J2
10124
QUAD TTL/ECL
Vt
Rt
K2-2,3,4
FROM K2
K2
BUSS C
BUSS B
BUSS A
BUSS C TO J2
BUSS B TO J1
BUSS A TO K1
C57
C55
C53
TO INDIVIDUAL BUSS UNLOADER CARDS
BUSS A FROM 74LS244'S K8, L8
BUSS B FROM 74LS244'S H9, J9
BUSS C FROM 74LS244'S H10, H11
DATA LATCH 1
[FROM 74F74 P6 PIN 8
SHEET 4 OF 41]
DATA LATCH 1
F1
F2
F3
74F174
CLR
CLK
HEX D
FLIP-FLOPS
SA0 SA1 SA2 SA3 SA4 SA5
SA6 SA7 SA8 SA9 SA10 SA11
SA12 SA13 SA14 SA15 ON/OFF
74LS02
P8 D
TO 'A IN' 74F381'S E1,E2,E3,E5,E6
TO DATA LATCH 2
K11
L11
P11
27256
32KX8
UV EPROM
LO ADDR, HI BYTE
HI ADDR, HI BYTE
LO ADDR, LO BYTE
HI ADDR, LO BYTE
A0 A1 A2 A3 A4 A5 A6 A7 A8 A9 A10 A11 A12 A13 A14
O1 O2 O3 O4 O5 O6 O7 O8
HA8 HA9 HA10 HA11 HA12 HA13 HA14 HA15
HA0 HA1 HA2 HA3 HA4 HA5 HA6 HA7
CONTRACT
PET 688 TOMOGRAPH
LAWRENCE BERKELEY LABORATORY, NMRB DIV.
DR
CHK
ENG
APPD
NEXT HIGHER ASSY.
CONCENTRATOR CARD
FIFO'S
SIZE C
FSCM NO.
DWG NO. 72X886 3
11:38:12 17-Jan-92 CONFIG
SHEET 2 OF 5
27

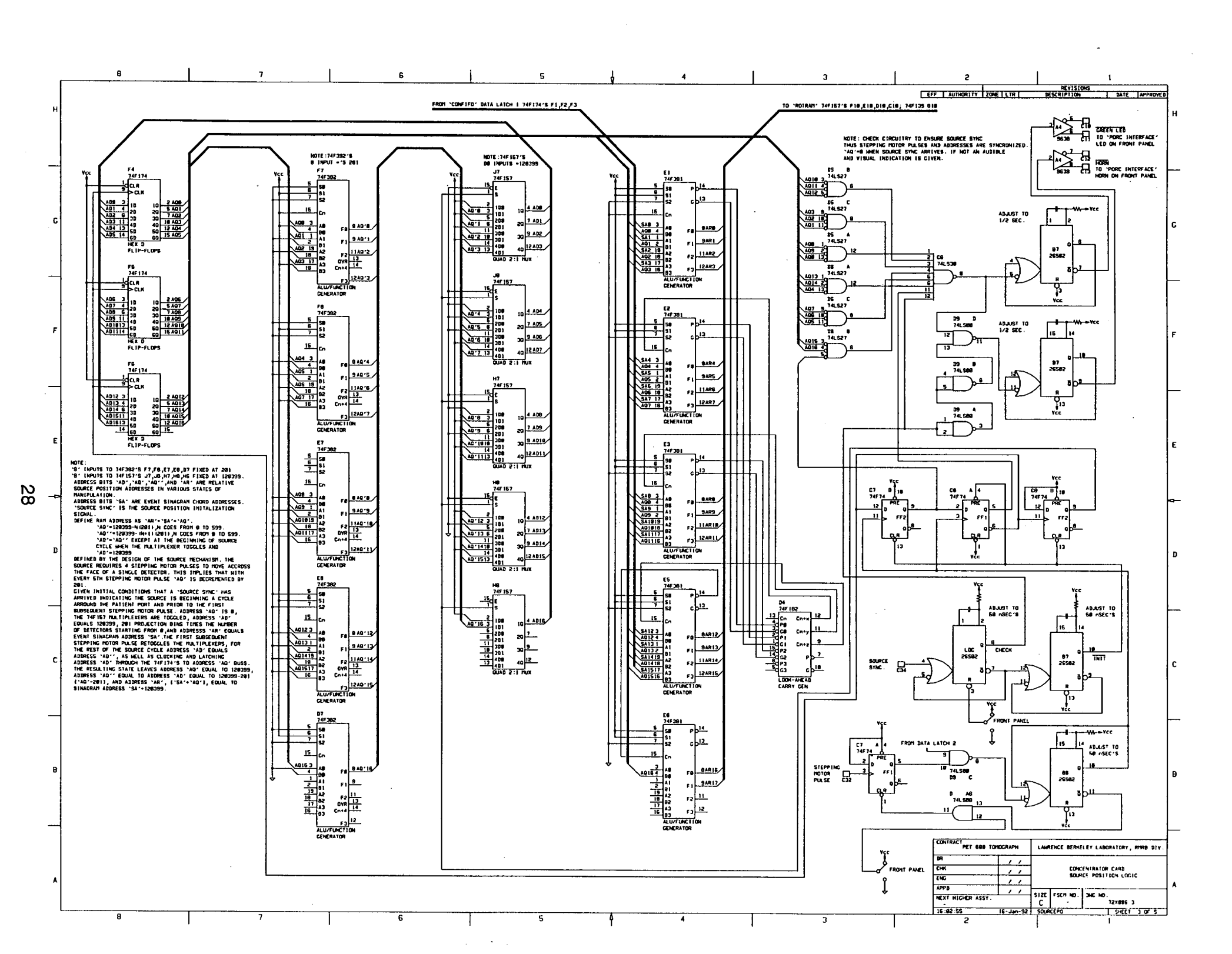
REVISIONS
ECF | AUTHORITY | ZONE | LTR | DESCRIPTION | DATE | APPROVED
FROM 'CONFIFO' DATA LATCH 1 74F174'S F1,F2,F3
TO 'ROTRAM' 74F157'S F10,E10,D10,C10; 74F125 B10
NOTE: CHECK CIRCUITRY TO ENSURE SOURCE SYNC THUS STEPPING MOTOR PULSES AND ADDRESSES ARE SYNCRONIZED. 'AQ'=0 WHEN SOURCE SYNC ARRIVES. IF NOT AN AUDIBLE AND VISUAL INDICATION IS GIVEN.
GREEN LED TO 'PORC INTERFACE' LED ON FRONT PANEL
HORN TO 'PORC INTERFACE' HORN ON FRONT PANEL
ADJUST TO 1/2 SEC.
ADJUST TO 50 nSEC'S
FROM DATA LATCH 2
STEPPING MOTOR PULSE
SOURCE SYNC.
FRONT PANEL
CHECK
INIT
NOTE:
'B' INPUTS TO 74F382'S F7,F8,E7,E8,D7 FIXED AT 201
'B' INPUTS TO 74F157'S J7,J8,H7,H8,H8 FIXED AT 128399.
ADDRESS BITS 'AD','AQ','AQ''',AND 'AR' ARE RELATIVE SOURCE POSITION ADDRESSES IN VARIOUS STATES OF MANIPULATION.
ADDRESS BITS 'SA' ARE EVENT SINAGRAM CHORD ADDRESSES. 'SOURCE SYNC' IS THE SOURCE POSITION INITALIZATION SIGNAL.
DEFINE RAM ADDRESS AS 'AR'+'SA'+'AQ'.
'AQ'=128399-N(201),N GOES FROM 0 TO 599.
'AQ''=128399-(N+1)(201),N GOES FROM 0 TO 599.
'AD'='AQ'' EXCEPT AT THE BEGINNING OF SOURCE CYCLE WHEN THE MULTIPLEXER TOGGLES AND 'AD'=128399
DEFINED BY THE DESIGN OF THE SOURCE MECHANISM. THE SOURCE REQUIRES 4 STEPPING MOTOR PULSES TO MOVE ACCROSS THE FACE OF A SINGLE DETECTOR. THIS IMPLIES THAT WITH EVERY 5TH STEPPING MOTOR PULSE 'AQ' IS DECREMENTED BY 201
GIVEN INITIAL CONDITIONS THAT A 'SOURCE SYNC' HAS ARRIVED INDICATING THE SOURCE IS BEGINNING A CYCLE ARROUND THE PATIENT PORT AND PRIOR TO THE FIRST SUBSEQUENT STEPPING MOTOR PULSE. ADDRESS 'AQ' IS 0, THE 74F157 MULTIPLEXERS ARE TOGGLED, ADDRESS 'AD' EQUALS 128399, 201 PROJECTION RING TIMES THE NUMBER OF DETECTORS STARTING FROM 0,AND ADDRESSS 'AR' EQUALS EVENT SINAGRAM ADDRESS 'SA'.THE FIRST SUBSEQUENT STEPPING MOTOR PULSE RETOGGLES THE MULTIPLEXERS, FOR THE REST OF THE SOURCE CYCLE ADDRESS 'AD' EQUALS ADDRESS 'AQ'', AS WELL AS CLOCKING AND LATCHING ADDRESS 'AD' THROUGH THE 74F174'S TO ADDRESS 'AQ' BUSS. THE RESULTING STATE LEAVES ADDRESS 'AQ' EQUAL TO 128399, ADDRESS 'AQ'' EQUAL TO ADDRESS 'AD' EQUAL TO 128399-201 ('AQ''=201), AND ADDRESS 'AR', ('SA'+'AQ'), EQUAL TO SINAGRAM ADDRESS 'SA'+128399.
CONTRACT PET 600 TOMOGRAPH
LAWRENCE BERKELEY LABORATORY, MMRB DIV.
DR
CHK
ENG
APPR
NEXT HIGHER ASSY.
CONCENTRATOR CARD SOURCE POSITION LOGIC
SIZE C
FSCM NO.
DWG NO. 72X886 3
16:02:55 16-Jan-92 SOURCEPO
SHEET 3 OF 5
28

REVISIONS						
EFF	AUTHORITY	ZONE	LTR	DESCRIPTION	DATE	APPROVED

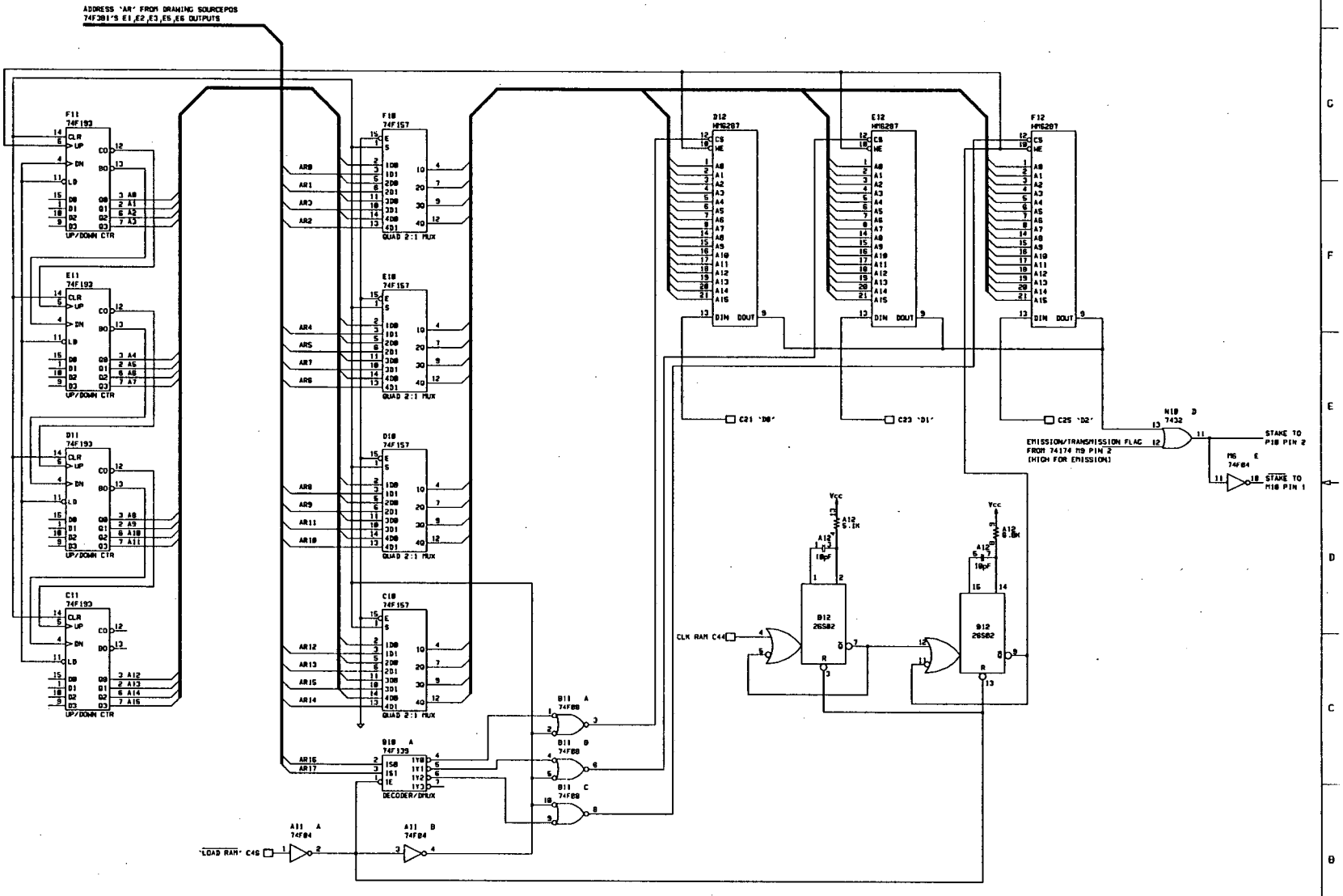

CONTRACT PET 688 TOMOGRAPH		LAWRENCE BERKELEY LABORATORY, MRRB DIV.	
DR	/ /	CONCENTRATOR CARD ROTATING RAM LOGIC	
CHK	/ /		
ENG	/ /		
APPD	/ /		
NEXT HIGHER ASSY. -		SIZE C	FSCM NO. -
		DWG NO 72K886 3	
19:31:20	16-Jan-92	ROTRAM	SHEET 4 OF 5

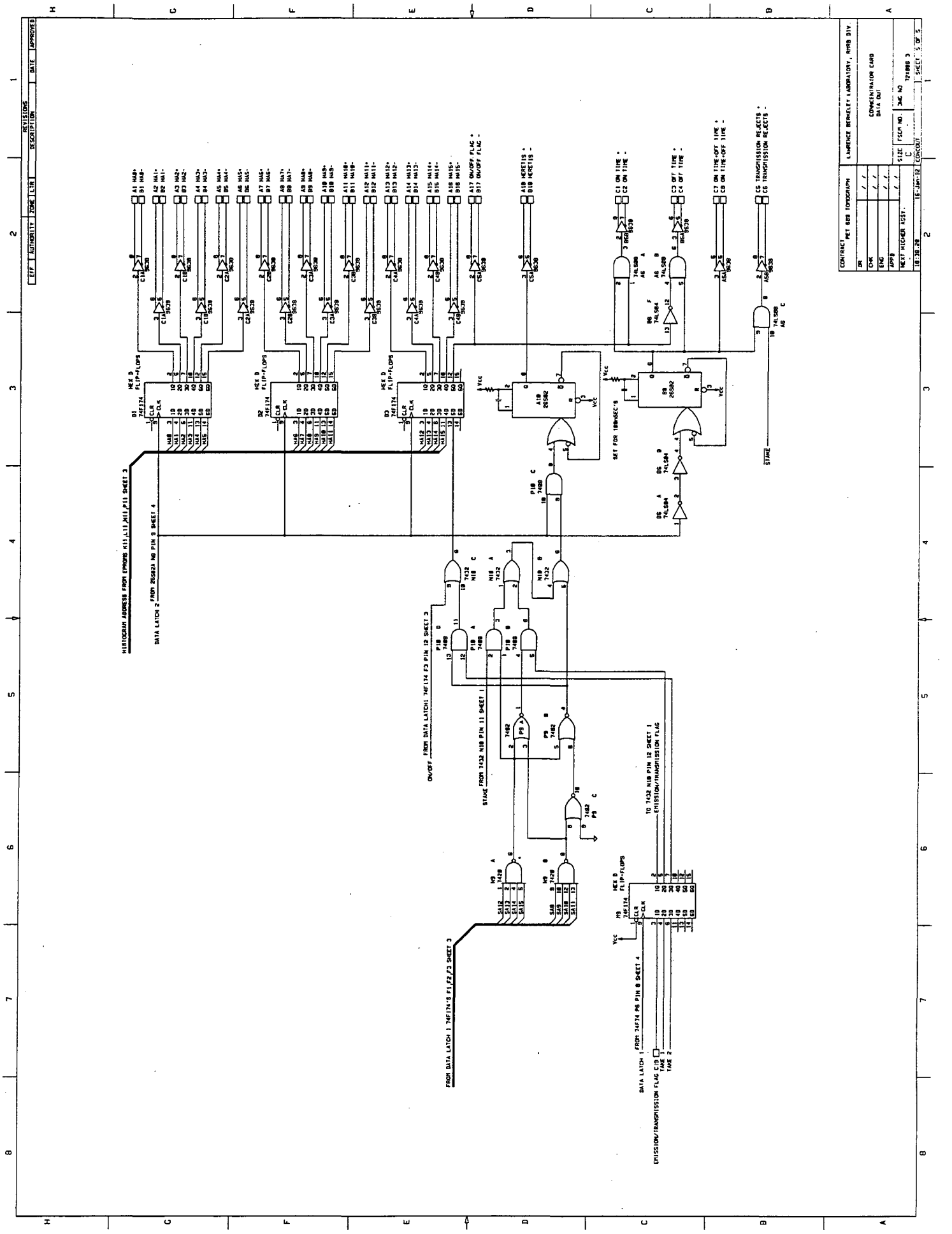

REVISIONS
EFF
AUTHORITY
ZONE
LTR
DESCRIPTION
DATE
APPROVED
CONTRACT
PET 688 TOMOGRAPH
LAWRENCE BERKELEY LABORATORY, RMRB DIV
CONCENTRATOR CARD
DATA OUT
SIZE
C
FSCM NO.
DWG NO
SHEET 5 OF 5
HEX D FLIP-FLOPS
HISTOGRAM ADDRESS FROM EPROMS K11,L11,N11,P11 SHEET 3
DATA LATCH 2
FROM 26S02A N8 PIN 9 SHEET 4
ON/OFF
FROM DATA LATCH1 74F174 F3 PIN 12 SHEET 3
STAKE
FROM 7432 N10 PIN 11 SHEET 1
TO 7432 N10 PIN 12 SHEET 1
EMISSION/TRANSMISSION FLAG
FROM DATA LATCH 1 74F174'S F1,F2,F3 SHEET 3
FROM 74F74 P6 PIN 8 SHEET 4
DATA LATCH 1
EMISSION/TRANSMISSION FLAG C19
TAKE 1
TAKE 2
SET FOR 100nSEC'S

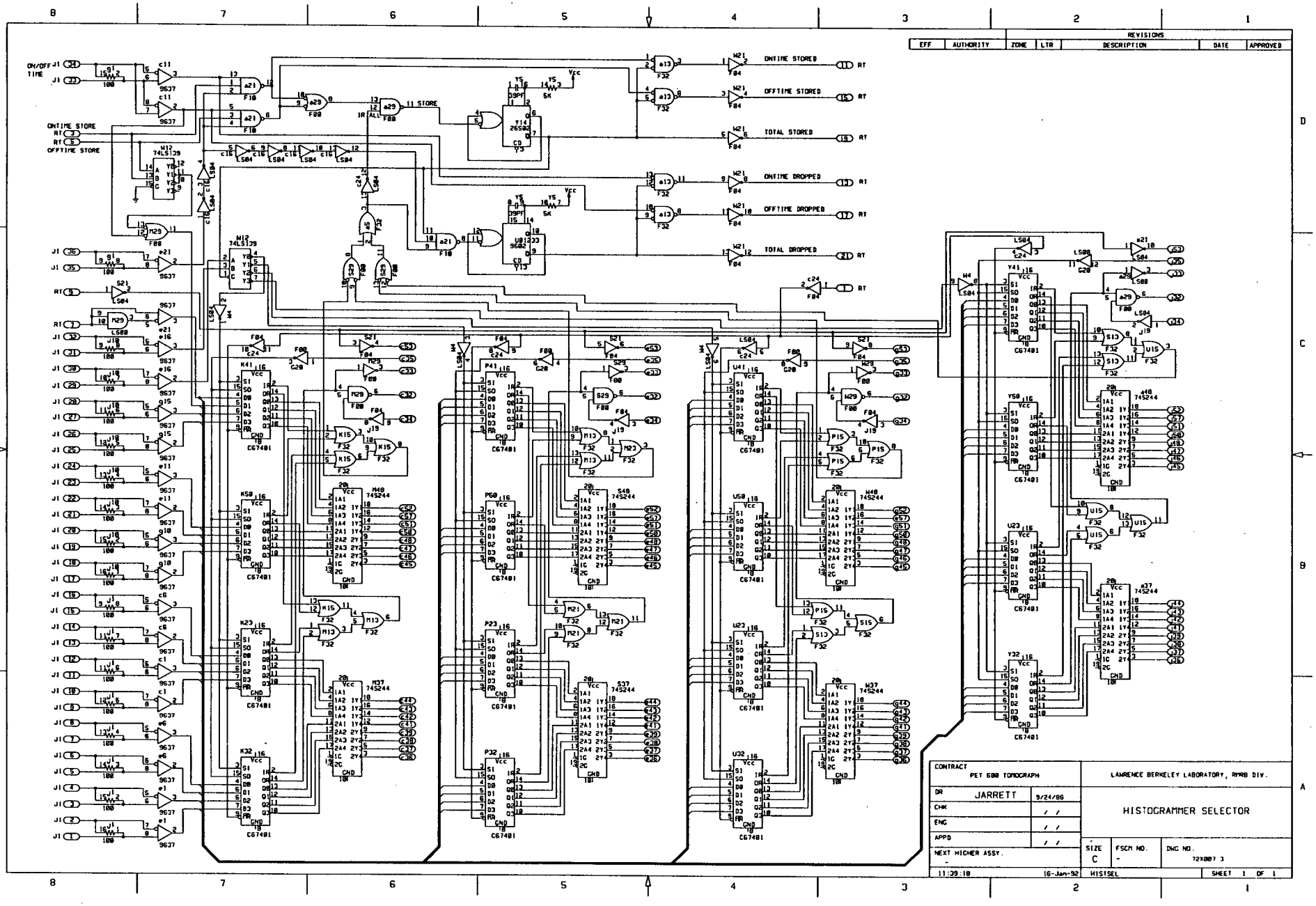
REVISIONS
EFF | AUTHORITY | ZONE | LTR | DESCRIPTION | DATE | APPROVED
ONTIME STORED
OFFTIME STORED
TOTAL STORED
ONTIME DROPPED
OFFTIME DROPPED
TOTAL DROPPED
ON/OFF TIME
ONTIME STORE
OFFTIME STORE
11 STORE
CONTRACT
PET 600 TOMOGRAPH
LAWRENCE BERKELEY LABORATORY, NMRB DIV.
DR
JARRETT
9/24/86
CHK
ENG
APPD
NEXT HIGHER ASSY.
HISTOGRAMMER SELECTOR
SIZE
C
FSCM NO.
DWG NO.
72X007 3
11:39:18
16-Jan-92
HISTSEL
SHEET 1 OF 1

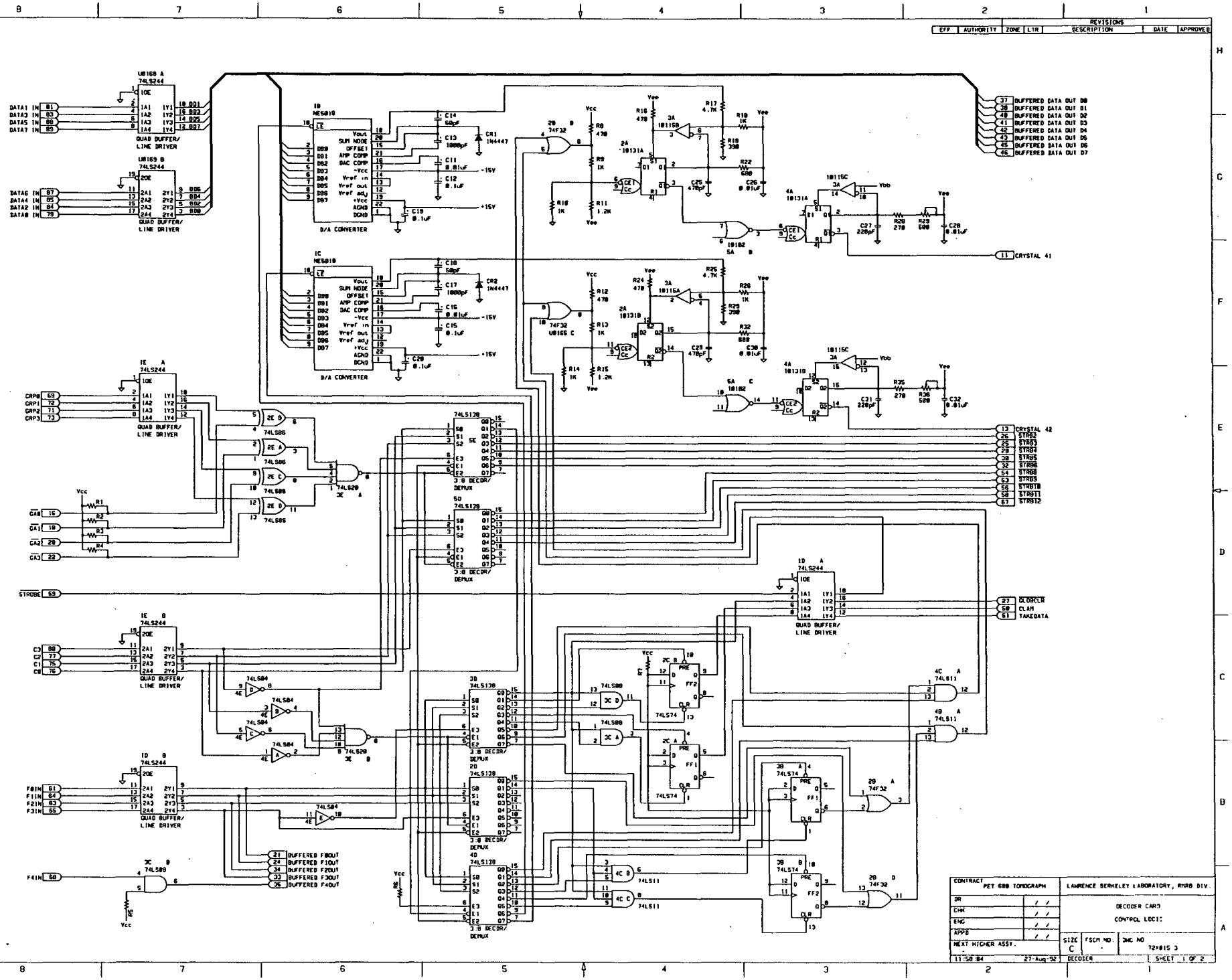
REVISIONS
EFF | AUTHORITY | ZONE | LTR | DESCRIPTION | DATE | APPROVED
QUAD BUFFER/ LINE DRIVER
D/A CONVERTER
3:8 DECOR/ DEMUX
BUFFERED DATA OUT D0
BUFFERED DATA OUT D1
BUFFERED DATA OUT D2
BUFFERED DATA OUT D3
BUFFERED DATA OUT D4
BUFFERED DATA OUT D5
BUFFERED DATA OUT D6
BUFFERED DATA OUT D7
CRYSTAL 41
CRYSTAL 42
STRB0
STRB1
STRB2
STRB3
STRB4
STRB5
STRB6
STRB7
STRB8
STRB9
STRB10
STRB11
STRB12
CLOBCLR
CLAM
TAKEDATA
STROBE
BUFFERED F80UT
BUFFERED F10UT
BUFFERED F20UT
BUFFERED F30UT
BUFFERED F40UT
CONTRACT
PET 600 TOMOGRAPH
LAWRENCE BERKELEY LABORATORY, RMRB DIV.
DR
CHK
ENG
APPD
NEXT HIGHER ASSY.
DECODER CARD
CONTROL LOGIC
SIZE C
FSCM NO.
DWG NO
72X815 3
11:58:04
27-Aug-92
DECODER
SHEET 1 OF 2

REVISIONS					
EFF	AUTHORITY	ZONE	LTR	DESCRIPTION	DATE	APPROVED

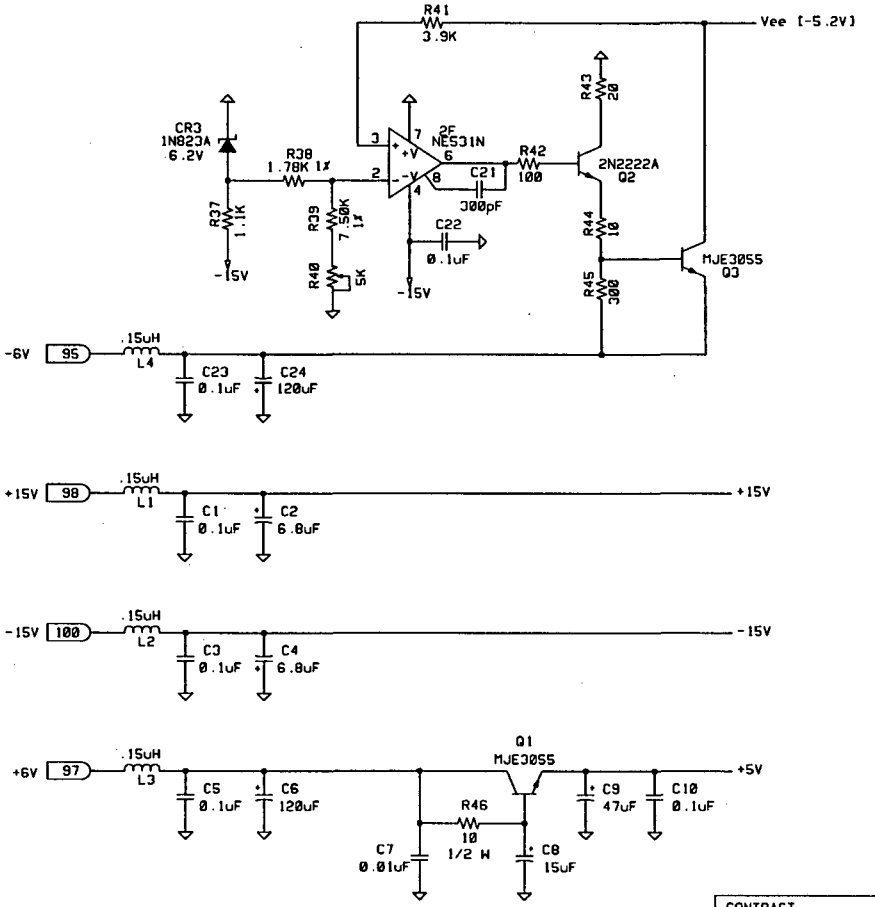

CONTRACT: PET 600 TOMOGRAPH		LAWRENCE BERKELEY LABORATORY, RMRB DIV.	
DR	/ /	DECODER CARD POWER +/-15,+5,-5.2	
CHK	/ /		
ENC	/ /		
APPD	/ /	SIZE: C	FSCM NO.: -
NEXT HIGHER ASSY.: -		DWG NO.: 72X015 3	
15:33:03	13-Jan-92	DECPWR	SHEET 2 OF 2

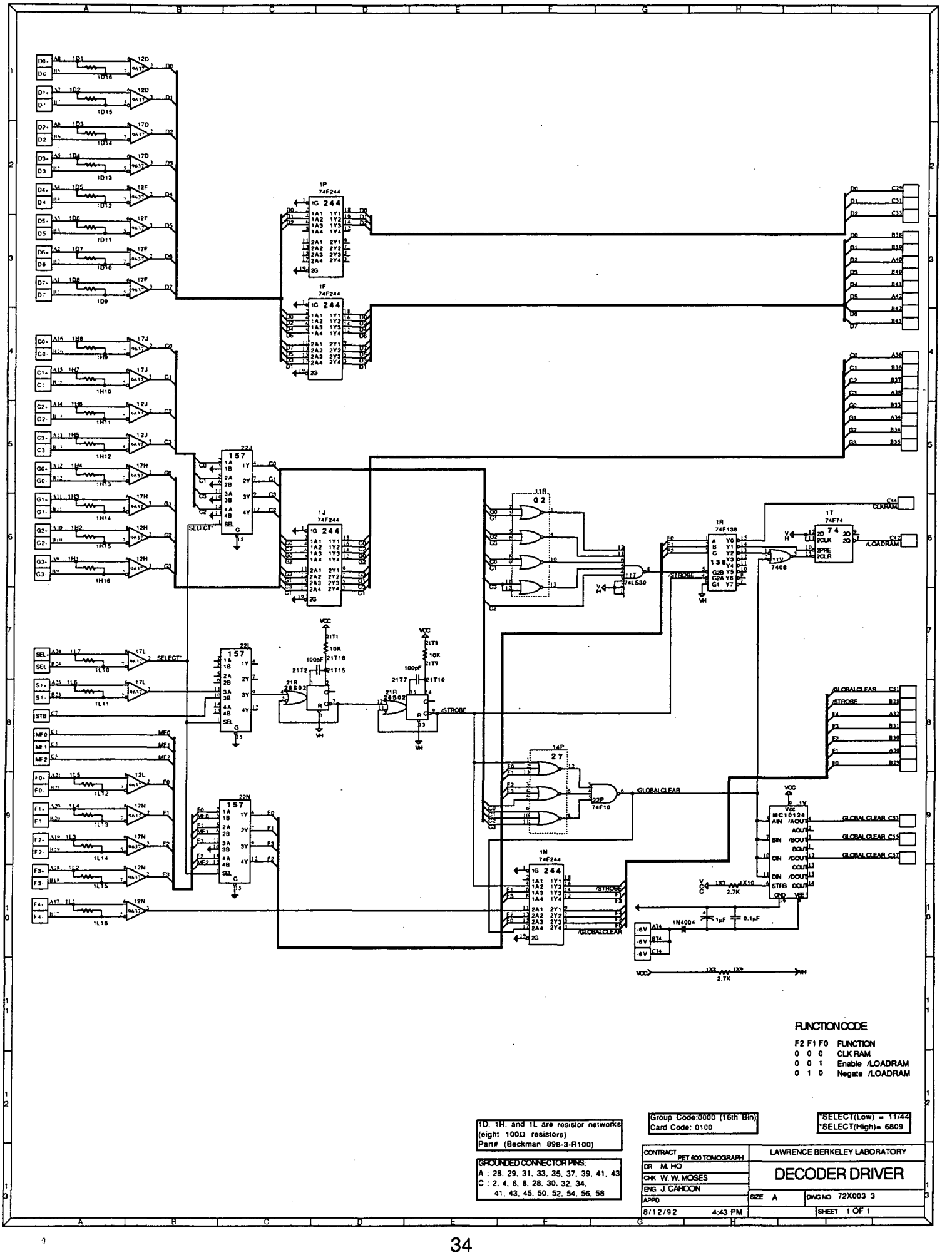
FUNCTION CODE
F2 F1 F0 FUNCTION
0 0 0 CLK RAM
0 0 1 Enable /LOADRAM
0 1 0 Negate /LOADRAM
1D, 1H, and 1L are resistor networks (eight 100Ω resistors) Part# (Beckman 898-3-R100)
GROUNDED CONNECTOR PINS:
A : 28, 29, 31, 33, 35, 37, 39, 41, 43
C : 2, 4, 6, 8, 28, 30, 32, 34, 41, 43, 45, 50, 52, 54, 56, 58
Group Code:0000 (16th Bin)
Card Code: 0100
*SELECT(Low) = 11/44
*SELECT(High)= 6809
CONTRACT PET 600 TOMOGRAPH
DR M. HO
CHK W. W. MOSES
ENG J. CAHOON
APPD
8/12/92 4:43 PM
LAWRENCE BERKELEY LABORATORY
DECODER DRIVER
SIZE A
DWG NO 72X003 3
SHEET 1 OF 1

CAMAC CARD-EDGE CONNECTOR

LABEL	PIN#	LABEL	PIN#
L1	1	R1	2
L2	3	R2	4
L3	5	R3	6
L4	7	R4	8
L5	9	R5	10
L6	11	R6	12
L7	13	R7	14
L8	15	R8	16
L9	17	R9	18
L10	19	R10	20
L11	21	R11	22
L12	23	R12	24
L13	25	R13	26
L14	27	R14	28
L15	29	R15	30
L16	31	R16	32
L17	33	R17	34
L18	35	R18	36
L19	37	R19	38
L20	39	R20	40
L21	41	R21	42
L22	43	R22	44
L23	45	R23	46
L24	47	R24	48
L25	49	R25	50
L26	51	R26	52
L27	53	R27	54
L28	55	R28	56
L29	57	R29	58
L30	59	R30	60
L31	61	R31	62
L32	63	R32	64
L33	65	R33	66
L34	67	R34	68
L35	69	R35	70
L36	71	R36	72
L37	73	R37	74
L38	75	R38	76
L39	77	R39	78
L40	79	R40	80
L41	81	R41	82
L42	83	R42	84
L43	85	R43	86

CHIP NUMBER: TYPE
A20: 74LS273
A32: 74LS273
A44: 74LS273
C20: 74LS20
C29: 74LS32
C38: 74LS04
C47: 74LS32
E20: 74LS32
E29: 74LS32
E38: 74LS08
E47: 74LS03

50 Pin Front Panel Connector
CAMAC Card-Edge Connector
Front panel connector connects to cable A

CONTRACT	LAWRENCE BERKELEY LABORATORY
DR M. HO	DECODER-DRIVER DRIVER
CHK W. W. MOSES	
ENG M. COLINA	SIZE A DWG NO 72X025 3
APPD	
8/12/92 5:05 PM	CAMAC SLOT 5 SHEET 1 OF 1

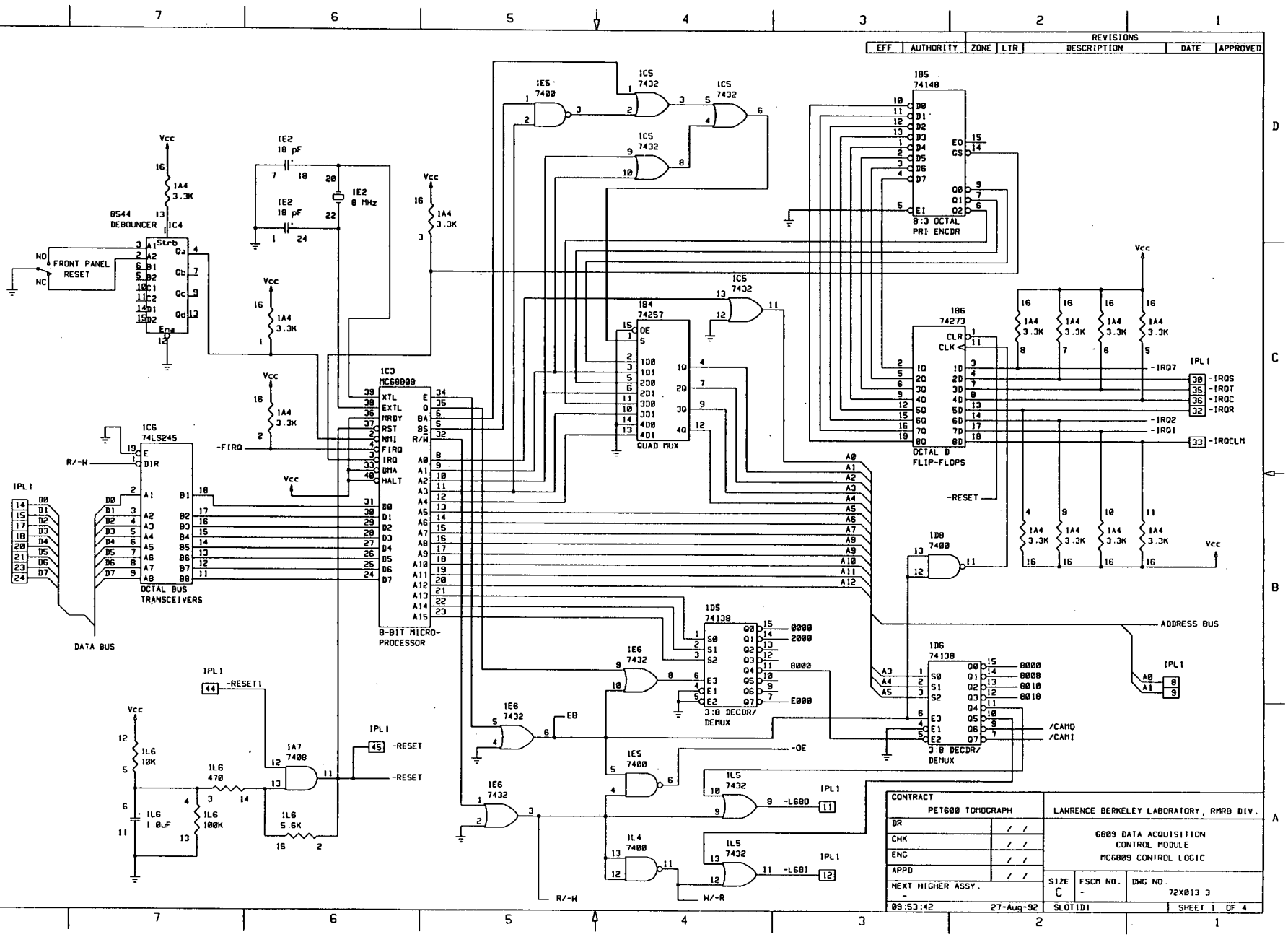
REVISIONS
EFF
AUTHORITY
ZONE
LTR
DESCRIPTION
DATE
APPROVED
8544 DEBOUNCER
FRONT PANEL RESET
IC4
IC3 MC68009
8-BIT MICRO-PROCESSOR
IC6 74LS245
OCTAL BUS TRANSCEIVERS
DATA BUS
IB5 74148
8:3 OCTAL PRI ENCDR
IB4 74257
QUAD MUX
IB6 74273
OCTAL D FLIP-FLOPS
IB7 74138
3:8 DECDR/ DEMUX
IB6 74138
3:8 DECDR/ DEMUX
ADDRESS BUS
IPL1
-IRQ7
-IRQS
-IRQT
-IRQC
-IRQR
-IRQ2
-IRQ1
-IRQCLM
-RESET
-RESET1
-FIRQ
-OE
-L68O
-L68I
/CAMO
/CAMI
CONTRACT
PET600 TOMOGRAPH
LAWRENCE BERKELEY LABORATORY, RMRB DIV.
6809 DATA ACQUISITION CONTROL MODULE
MC6809 CONTROL LOGIC
DR
CHK
ENG
APPD
NEXT HIGHER ASSY.
SIZE C
FSCM NO.
DWG NO. 72X013 3
09:53:42
27-Aug-92
SLOT1D1
SHEET 1 OF 4

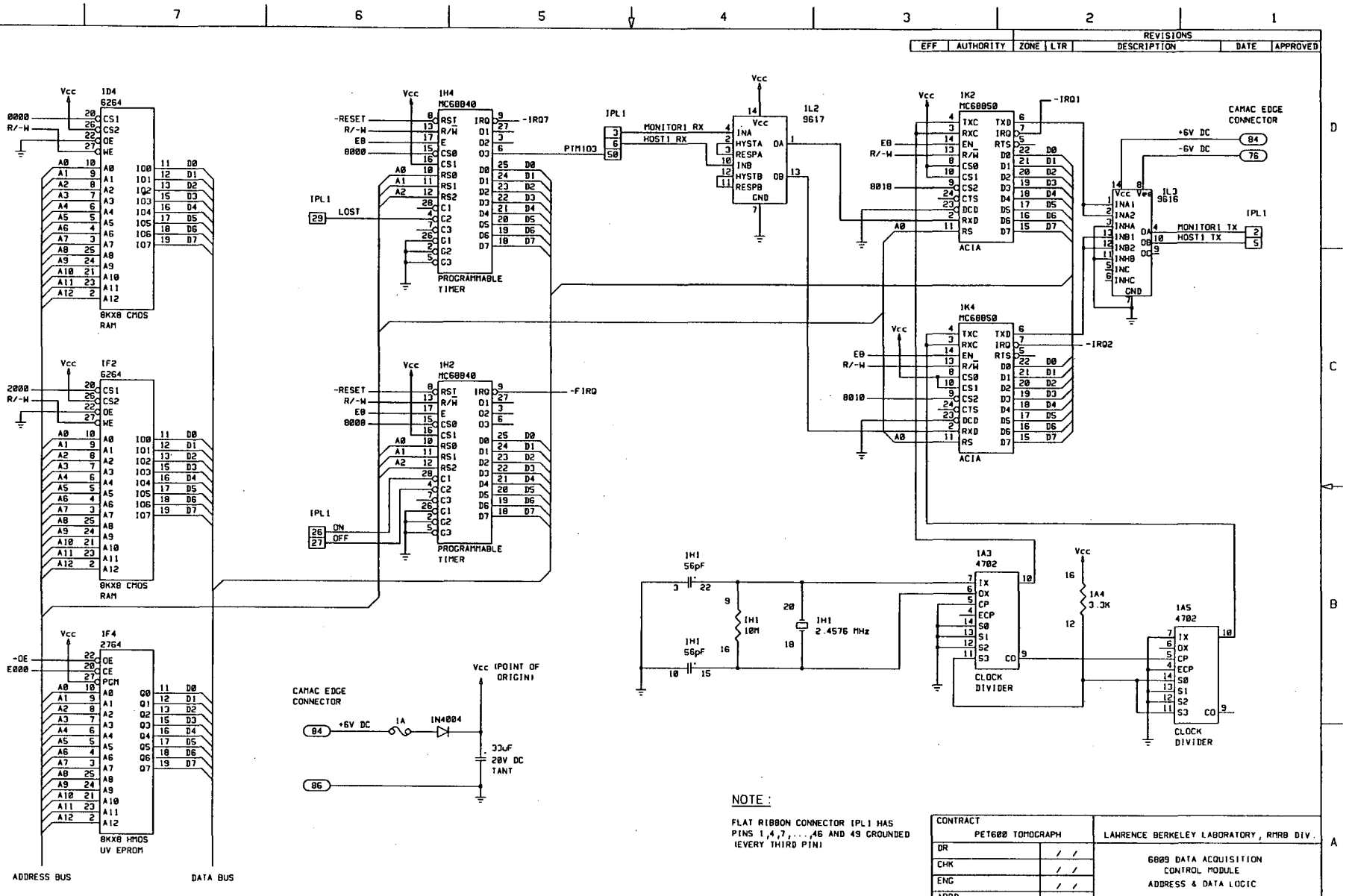
REVISIONS
EFF | AUTHORITY | ZONE | LTR | DESCRIPTION | DATE | APPROVED
1D4 6264
1F2 6264
1F4 2764
8KX8 CMOS RAM
8KX8 CMOS RAM
8KX8 HMOS UV EPROM
ADDRESS BUS
DATA BUS
1H4 MC68840
1H2 MC68840
PROGRAMMABLE TIMER
PROGRAMMABLE TIMER
IPL1
IL2 9617
IL3 9616
1K2 MC68850
1K4 MC68850
ACIA
ACIA
CAMAC EDGE CONNECTOR
+6V DC
-6V DC
MONITOR1 RX
HOST1 RX
MONITOR1 TX
HOST1 TX
-IRQ1
-IRQ2
-IRQ7
-FIRQ
LOST
ON
OFF
1H1 56pF
1H1 10M
1H1 2.4576 MHz
1A3 4702
CLOCK DIVIDER
1A4 3.3K
1A5 4702
CLOCK DIVIDER
Vcc (POINT OF ORIGIN)
1A
IN4004
.33uF 20V DC TANT
NOTE :
FLAT RIBBON CONNECTOR (PL1 HAS PINS 1,4,7,...,46 AND 49 GROUNDED (EVERY THIRD PIN)
CONTRACT
PET600 TOMOGRAPH
LAWRENCE BERKELEY LABORATORY, RMRB DIV.
DR
CHK
ENG
APPD
NEXT HIGHER ASSY.
6809 DATA ACQUISITION CONTROL MODULE
ADDRESS & DATA LOGIC
SIZE C
FSCM NO. -
DWG NO. 72X013 3
09:57:33 27-Aug-92
SLOT1D2
SHEET 2 OF 4

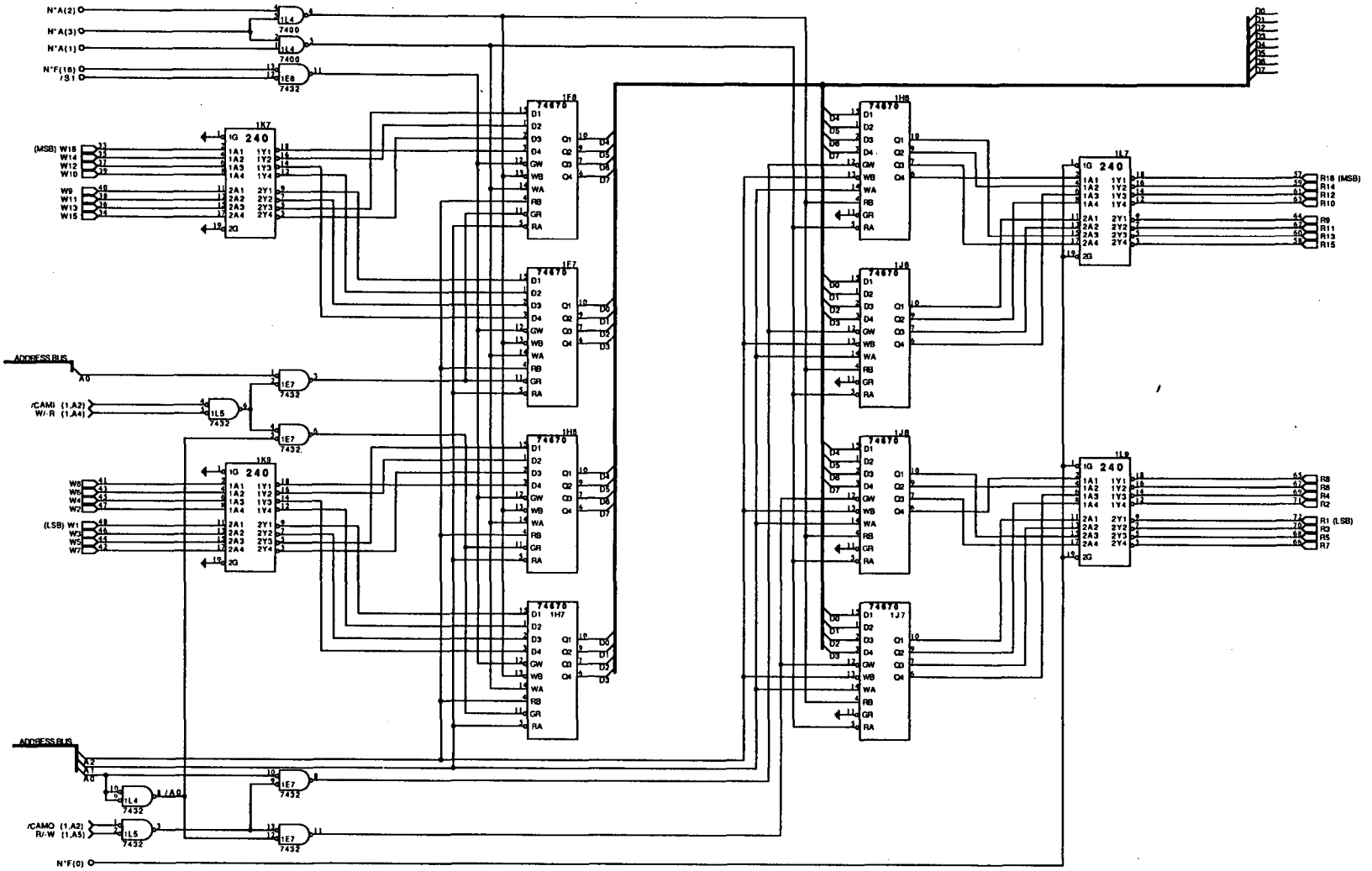

CONTRACT	PET 600 TOMOGRAPH	LAWRENCE BERKELEY LABORATORY
DR M. HO		6809 DATA ACQUISITION CONTROL MODULE CAMAC INTERFACE
CHK W. W. MOSES		
ENG		
APPD		SIZE A DWG NO 72X013 3
8/27/92 9:38 AM		SLOT 03 SHEET 3 OF 4

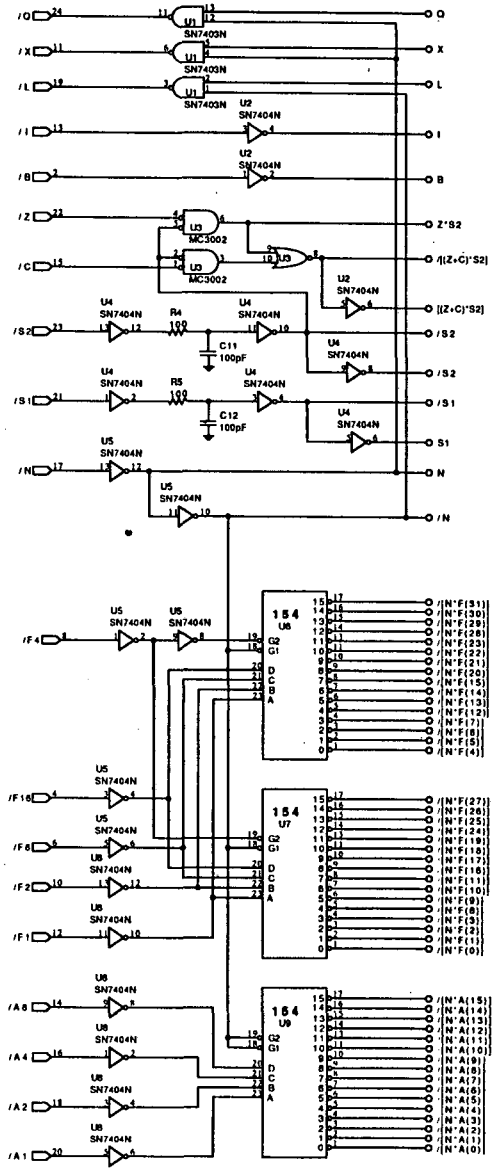

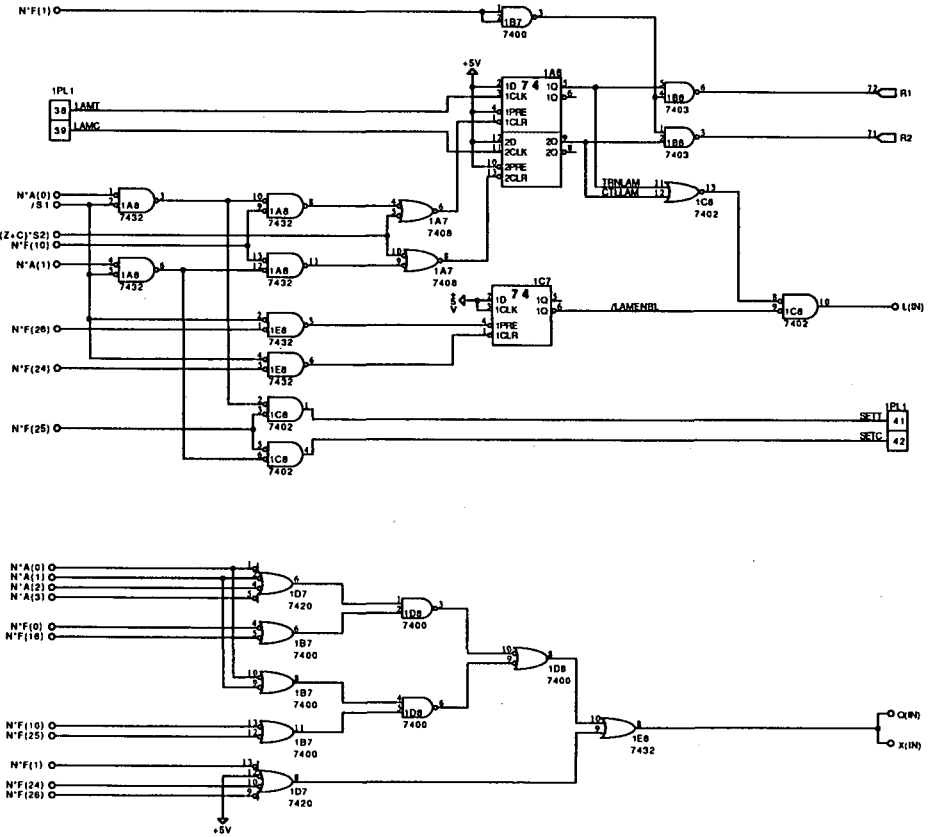

CAMAC Decoded Functions
CAMAC Card Edge Connector

CONTRACT PET 600 TOMOGRAPH	LAWRENCE BERKELEY LABORATORY
DR M. HO	6809 DATA ACQUISITION CONTROL MODULE
CHK W. W. MOSES	CAMAC CONTROL LINES
ENG	
APPD	SIZE A DWG NO 72X013 3
8/27/92 9:56 AM	SCHEME SHEET 4 OF 4

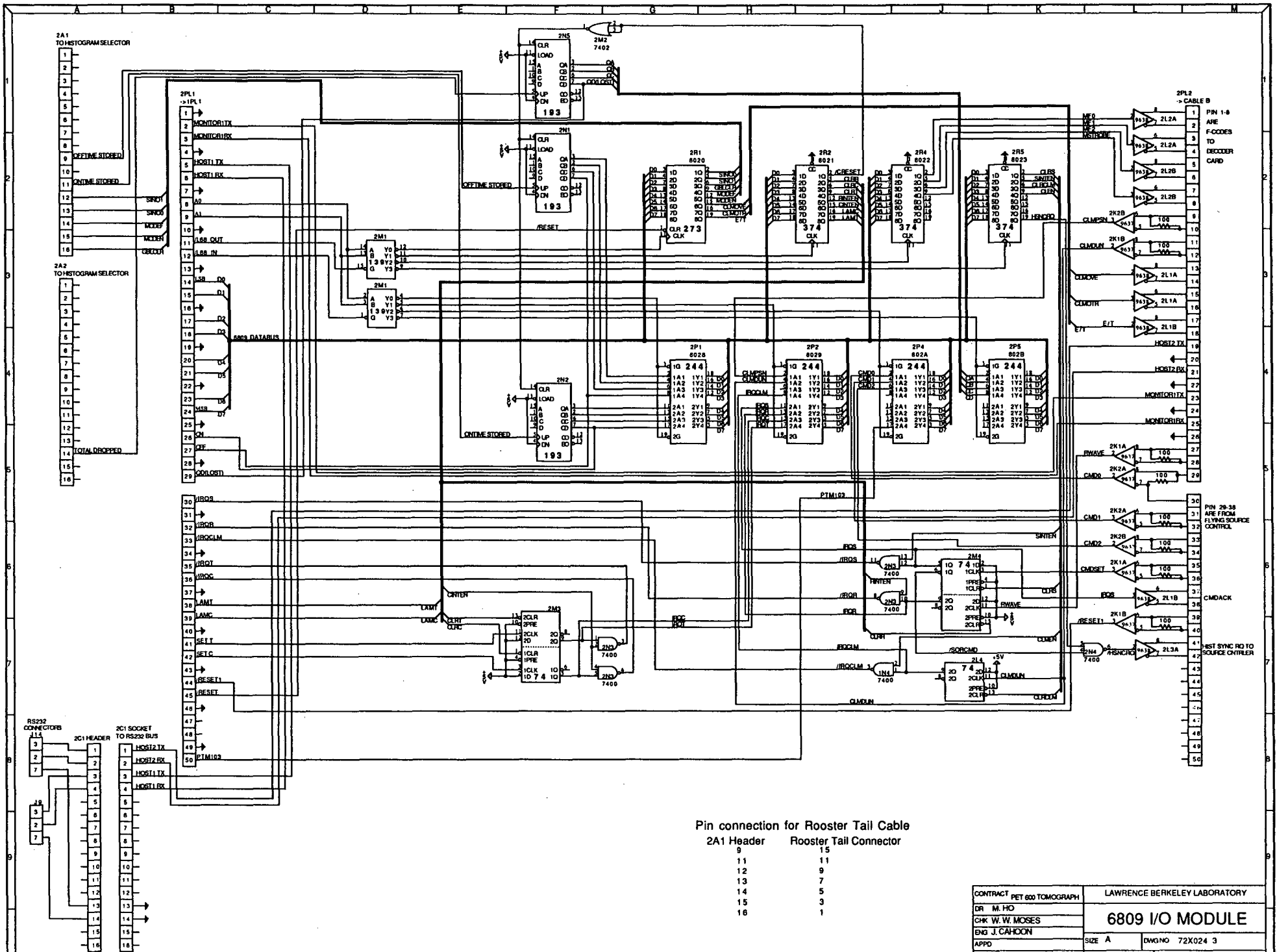

Pin connection for Rooster Tail Cable

2A1 Header	Rooster Tail Connector
9	15
11	11
12	9
13	7
14	5
15	3
16	1

CONTRACT PET 600 TOMOGRAPH	LAWRENCE BERKELEY LABORATORY
DR M. HO	6809 I/O MODULE
CHK W. W. MOSES	
ENG J. CAHOON	SIZE A DWG NO 72X024 3
APPD	
8/12/92 5:06 PM	CAMAC CRATE SLOT 3 SHEET 1 OF 1

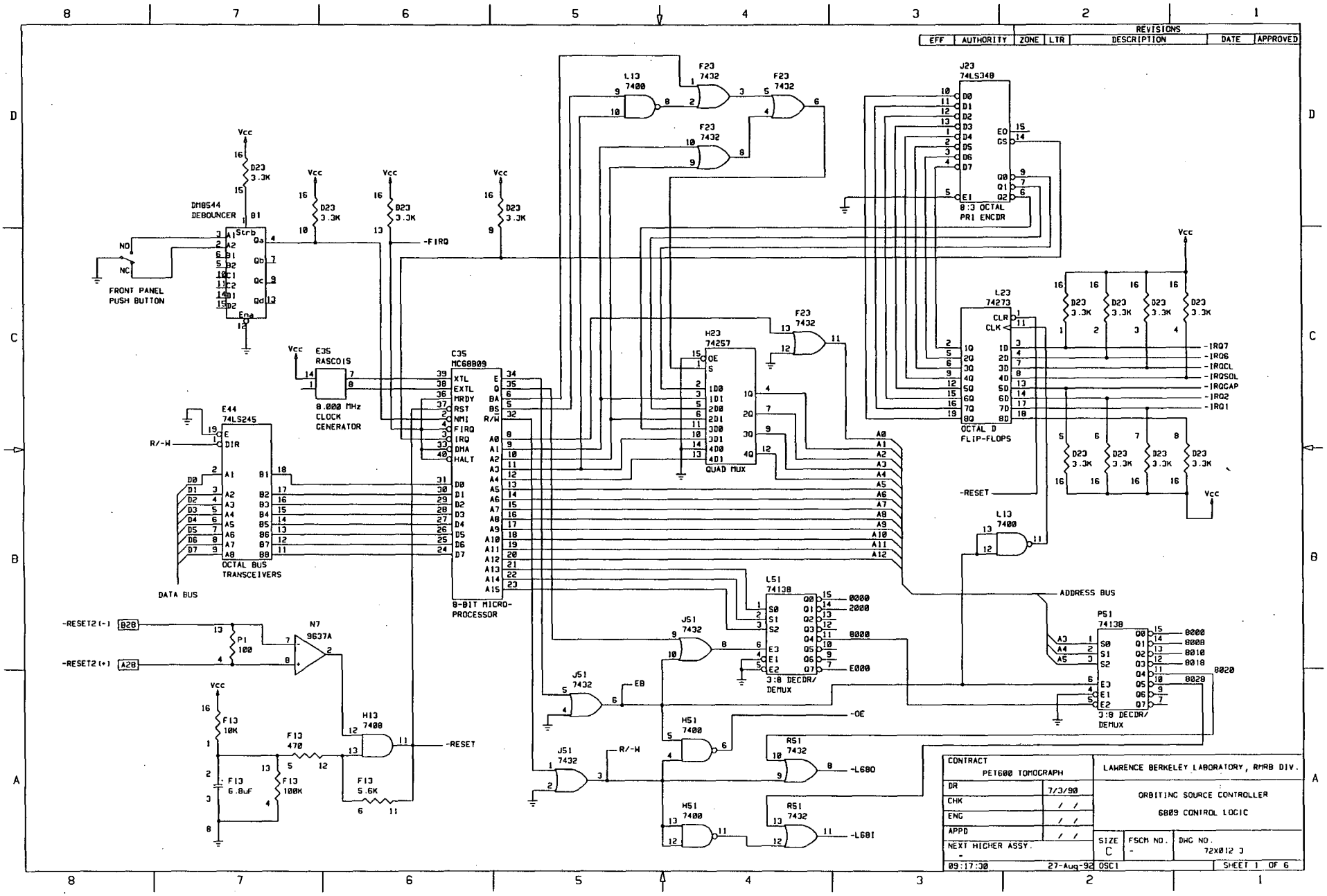
REVISIONS
EFF | AUTHORITY | ZONE | LTR | DESCRIPTION | DATE | APPROVED
DM8544 DEBOUNCER
FRONT PANEL PUSH BUTTON
8.000 MHz CLOCK GENERATOR
8-BIT MICRO-PROCESSOR
OCTAL BUS TRANSCEIVERS
DATA BUS
QUAD MUX
8:3 OCTAL PRI ENCDR
OCTAL D FLIP-FLOPS
3:8 DECDR/ DEMUX
ADDRESS BUS
-RESET
-OE
-L680
-L681
-IRQ7
-IRQ6
-IRQCL
-IRQSOL
-IRQCAP
-IRQ2
-IRQ1
CONTRACT
PET600 TOMOGRAPH
LAWRENCE BERKELEY LABORATORY, RMRB DIV.
ORBITING SOURCE CONTROLLER
6809 CONTROL LOGIC
DR 7/3/90
CHK
ENG
APPD
NEXT HIGHER ASSY.
SIZE C
FSCM NO. -
DWG NO. 72X012 J
09:17:30 27-Aug-92 OSC1
SHEET 1 OF 6

41

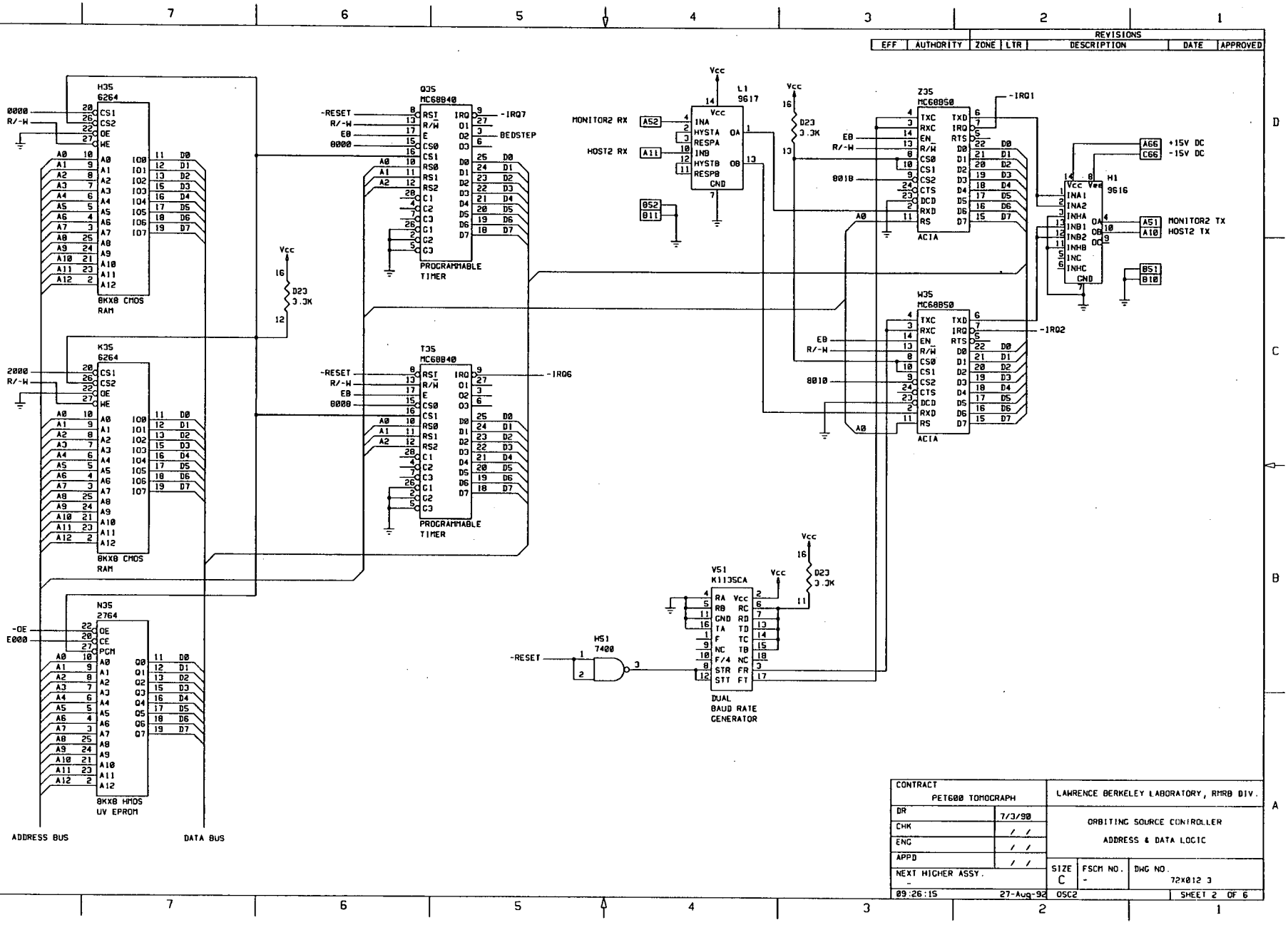
REVISIONS
EFF | AUTHORITY | ZONE | LTR | DESCRIPTION | DATE | APPROVED
H3S 6264
K3S 6264
N3S 2764
8KX8 CMOS RAM
8KX8 NMOS UV EPROM
Q3S MC68840
T3S MC68840
PROGRAMMABLE TIMER
L1 9617
Z3S MC68B50
W3S MC68B50
ACIA
H1 9616
V5I K1103CA
DUAL BAUD RATE GENERATOR
H5I 7400
D23 3.3K
-RESET
-IRQ7
-IRQ6
-IRQ1
-IRQ2
BEDSTEP
MONITOR2 RX
HOST2 RX
MONITOR2 TX
HOST2 TX
+15V DC
-15V DC
ADDRESS BUS
DATA BUS
CONTRACT
PET600 TOMOGRAPH
LAWRENCE BERKELEY LABORATORY, RMRB DIV.
DR 7/3/90
CHK
ENG
APPD
NEXT HIGHER ASSY.
ORBITING SOURCE CONTROLLER
ADDRESS & DATA LOGIC
SIZE C
FSCM NO. -
DWG NO. 72X012 3
09:26:15 27-Aug-92
OSC2
SHEET 2 OF 6

REVISIONS						
EFF	AUTHORITY	ZONE	LTR	DESCRIPTION	DATE	APPROVED

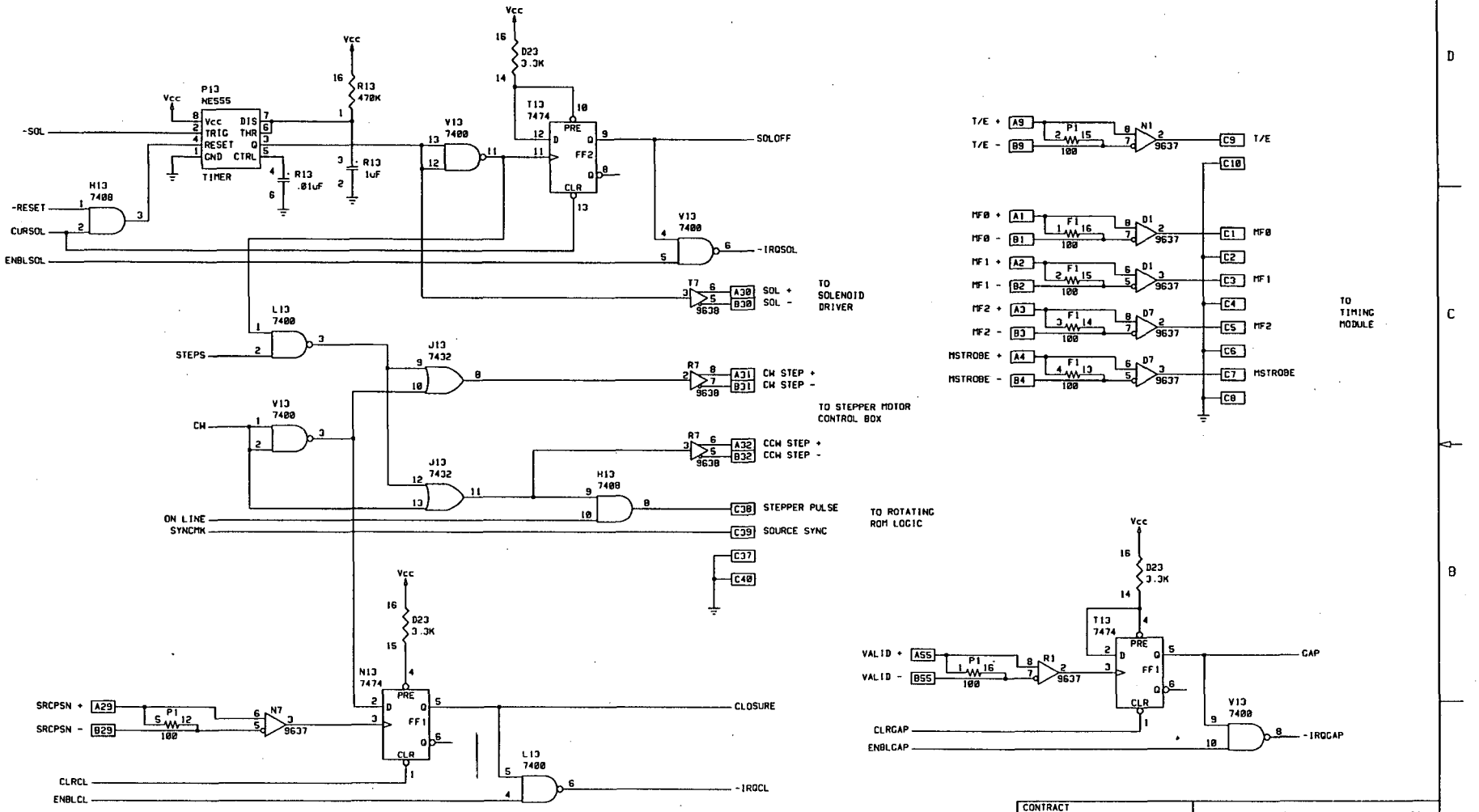

CONTRACT PET600 TOMOGRAPH		LAWRENCE BERKELEY LABORATORY, RMRB DIV.	
DR	/ /	ORBITING SOURCE CONTROLLER SIGNAL LOGIC	
CHK	/ /		
ENG	/ /		
APPD	/ /		
NEXT HIGHER ASSY. -		SIZE C	FSCM NO. -
		DWG NO. 72X012 3	
09:37:39	27-Aug-92	OSC3	SHEET 3 OF 6

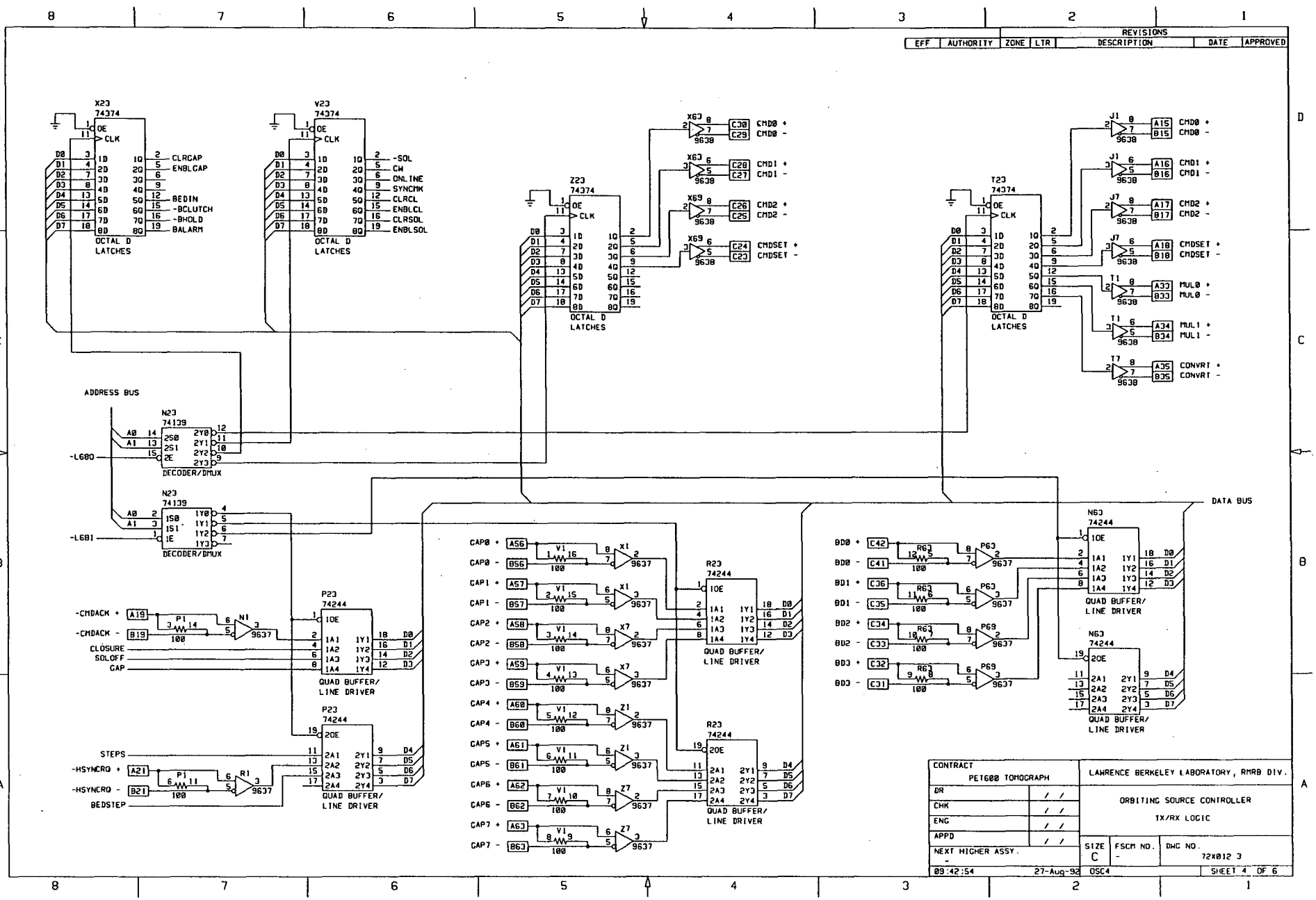
REVISIONS
EFF | AUTHORITY | ZONE | LTR | DESCRIPTION | DATE | APPROVED
X23 74374 OCTAL D LATCHES
Y23 74374 OCTAL D LATCHES
Z23 74374 OCTAL D LATCHES
T23 74374 OCTAL D LATCHES
CLRCAP
ENBLCAP
BEDIN
-BCLUTCH
-BHOLD
BALARM
-SOL
CW
ONLINE
SYNCMK
CLRCL
ENBLCL
CLRSOL
ENBLSOL
CMD0 +
CMD0 -
CMD1 +
CMD1 -
CMD2 +
CMD2 -
CMDSET +
CMDSET -
MUL0 +
MUL0 -
MUL1 +
MUL1 -
CONVRT +
CONVRT -
ADDRESS BUS
N23 74139 DECODER/DMUX
-L680
-L681
P23 74244 QUAD BUFFER/ LINE DRIVER
-CMDACK +
-CMDACK -
CLOSURE
SOLOFF
CAP
STEPS
-HSYNCRQ +
-HSYNCRQ -
BEDSTEP
CAP0 +
CAP0 -
CAP1 +
CAP1 -
CAP2 +
CAP2 -
CAP3 +
CAP3 -
CAP4 +
CAP4 -
CAP5 +
CAP5 -
CAP6 +
CAP6 -
CAP7 +
CAP7 -
R23 74244 QUAD BUFFER/ LINE DRIVER
BD0 +
BD0 -
BD1 +
BD1 -
BD2 +
BD2 -
BD3 +
BD3 -
N63 74244 QUAD BUFFER/ LINE DRIVER
DATA BUS
CONTRACT
PET600 TOMOGRAPH
LAWRENCE BERKELEY LABORATORY, RMRB DIV.
DR
CHK
ENG
APPD
NEXT HIGHER ASSY.
ORBITING SOURCE CONTROLLER
TX/RX LOGIC
SIZE C
FSCM NO. -
DWG NO. 72X012 3
09:42:54 27-Aug-92 OSC4
SHEET 4 OF 6

REVISIONS						
EFF	AUTHORITY	ZONE	LTR	DESCRIPTION	DATE	APPROVED

NOTE :

CONNECTION TO HISTOGRAMMER CONTROLLER 50-PIN CONNECTOR

A1	1	MF0 +
B1	2	MF0 -
A2	3	MF1 +
B2	4	MF1 -
A3	5	MF2 +
B3	6	MF2 -
A4	7	MSTROBE +
B4	8	MSTROBE -
A5	9	CLPSN +
B5	10	CLPSN -
A6	11	CLDUN +
B6	12	CLDUN -
A7	13	CLMOVE +
B7	14	CLMOVE -
A8	15	CLMOTR +
B8	16	CLMOTR -
A9	17	T/E +
B9	18	T/E -
A10	19	HOST2TX +
B10	20	HOST2TX -
A11	21	HOST2RX +
B11	22	HOST2RX -
A12	23	MONITX +
B12	24	MONITX -
A13	25	MONIRX +
B13	26	MONIRX -
A14	27	RWAVE +
B14	28	RWAVE -
A15	29	CMD0 +
B15	30	CMD0 -
A16	31	CMD1 +
B16	32	CMD1 -
A17	33	CMD2 +
B17	34	CMD2 -
A18	35	CMDSET +
B18	36	CMDSET -
A19	37	CMDACK +
B19	38	CMDACK -
A20	39	RESET1 +
B20	40	RESET1 -
A21	41	-HSNCRQ +
B21	42	-HSNCRQ 1
A22	43	
B22	44	
A23	45	
B23	46	
A24	47	
B24	48	
A25	49	
B25	50	

NOTE :

CONNECTION TO INTERFACE BOX 50-PIN CONNECTOR

A20	1	RESET2 +
B20	2	RESET2 -
A29	3	SRCPSN +
B29	4	SRCPSN -
A30	5	SOL +
B30	6	SOL -
A31	7	CWSTEP +
B31	8	CWSTEP -
A32	9	CCWSTEP +
B32	10	CCWSTEP -
A33	11	MUL0 +
B33	12	MUL0 -
A34	13	MUL1 +
B34	14	MUL1 -
A35	15	CONVRT +
B35	16	CONVRT -
A36	17	CLPSN +
B36	18	CLPSN -
A37	19	CLDUN +
B37	20	CLDUN -
A38	21	CLMOVE +
B38	22	CLMOVE -
A39	23	CLMOTR +
B39	24	CLMOTR -
A40	25	MONITX +
B40	26	MONITX -
A41	27	MONIRX +
B41	28	MONIRX -
A42	29	RWAVE +
B42	30	RWAVE -
A43	31	RESET1 +
B43	32	RESET1 -
A44	33	ONTIME +
B44	34	ONTIME -
A45	35	OFFTIME +
B45	36	OFFTIME -
A46	37	ONT+OFT +
B46	38	ONT+OFT -
A47	39	TRANREJ +
B47	40	TRANREJ -
A48	41	LEDSYNC +
B48	42	LEDSYNC -
A49	43	HORN +
B49	44	HORN -
A50	45	
B50	46	
A51	47	MON2TX +
B51	48	MON2TX -
A52	49	MON2RX +
B52	50	MON2RX -

NOTE :

CONNECTION TO INTERFACE BOX 20-PIN CONNECTOR

A55	1	VALID +
B55	2	VALID -
A56	3	CAP0 +
B56	4	CAP0 -
A57	5	CAP1 +
B57	6	CAP1 -
A58	7	CAP2 +
B58	8	CAP2 -
A59	9	CAP3 +
B59	10	CAP3 -
A60	11	CAP4 +
B60	12	CAP4 -
A61	13	CAP5 +
B61	14	CAP5 -
A62	15	CAP6 +
B62	16	CAP6 -
A63	17	CAP7 +
B63	18	CAP7 -
A64	19	
B64	20	

NOTE :

THE PINS SHOWN ABOVE AS A1 TO A64 AND B1 TO B64 BELONG TO THE BACKPLANE ROWS A AND B OF THE ORBITING SOURCE CONTROLLER. THE PINS SHOWN AS 1 TO 20 AND 1 TO 50 BELONG TO 20-PIN AND 50-PIN CONNECTORS THAT PLUG DIRECTLY TO THE BACKPLANE ROWS A AND B.

CONTRACT PET600 TOMOGRAPH		LAWRENCE BERKELEY LABORATORY, RMRB DIV.
DR	/ /	ORBITING SOURCE CONTROLLER PIN CONNECTIONS/NAMES
CHK	/ /	
ENG	/ /	
APPD	/ /	
NEXT HIGHER ASSY. -		SIZE C / FSCM NO. - / DWG NO. 72X012 3
09:46:39 27-Aug-92		OSCS / SHEET 5 OF 6

REVISIONS						
EFF	AUTHORITY	ZONE	LTR	DESCRIPTION	DATE	APPROVED

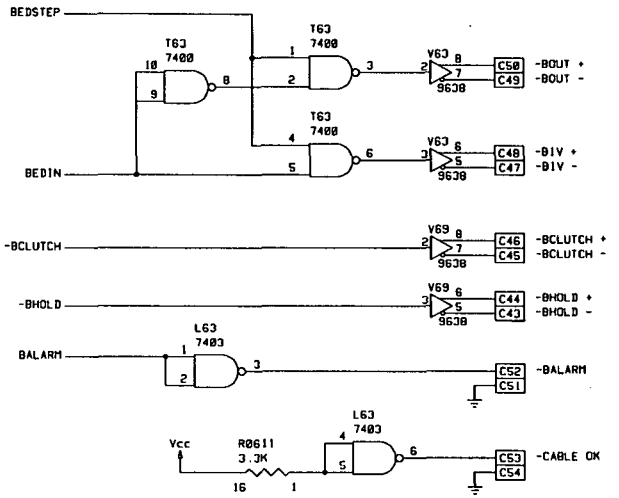

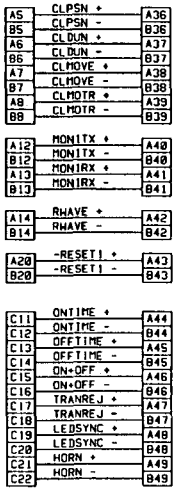

NOTE :

THE PINS SHOWN BELOW ARE ON THE BACKPLANE OF THE ORBITING SOURCE CONTROLLER. THESE PINS SERVE AS CONNECTING POSTS.

NOTE :

PINS A1 TO A20 AND B1 TO B20 SHOWN BELOW BELONG TO THE SPARE BACKPLANE AND NOT TO THE ORBITING SOURCE CONTROLLER.

NOTE :

40-PIN CONNECTOR GOES TO THE BED CONTROL UNIT. NOTICE THAT IT PLUGS INTO THE SPARE BACKPLANE.

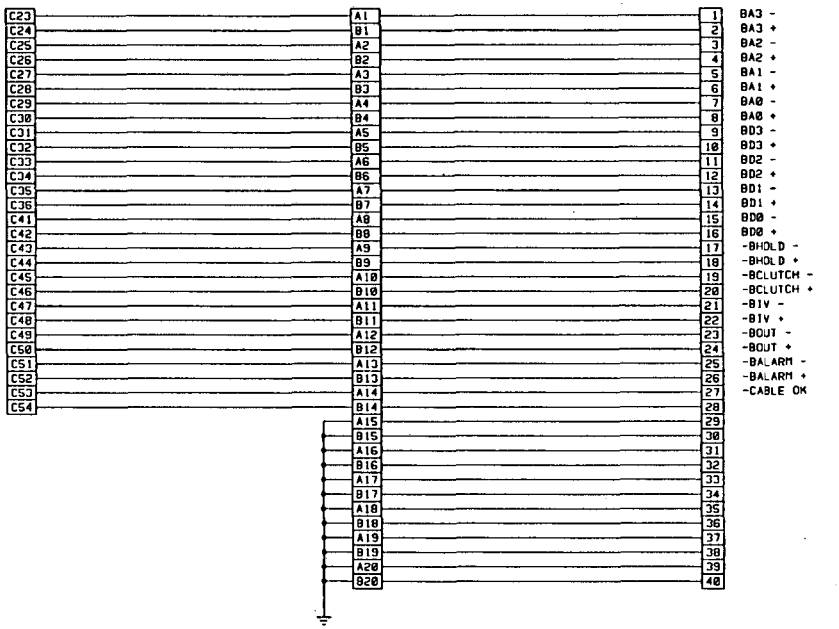

CONTRACT: PET600 TOMOGRAPH		LAWRENCE BERKELEY LABORATORY, RMRB DIV.	
DR	/ /	ORBITING SOURCE CONTROLLER	
CHK	/ /	MORE PIN CONNECTIONS/NAMES	
ENG	/ /		
APPD	/ /		
NEXT HIGHER ASSY. -		SIZE C	FSCM NO. -
09:50:05 27-Aug-92		OSC6	SHEET 6 OF 6

DWG NO. 72X012 J

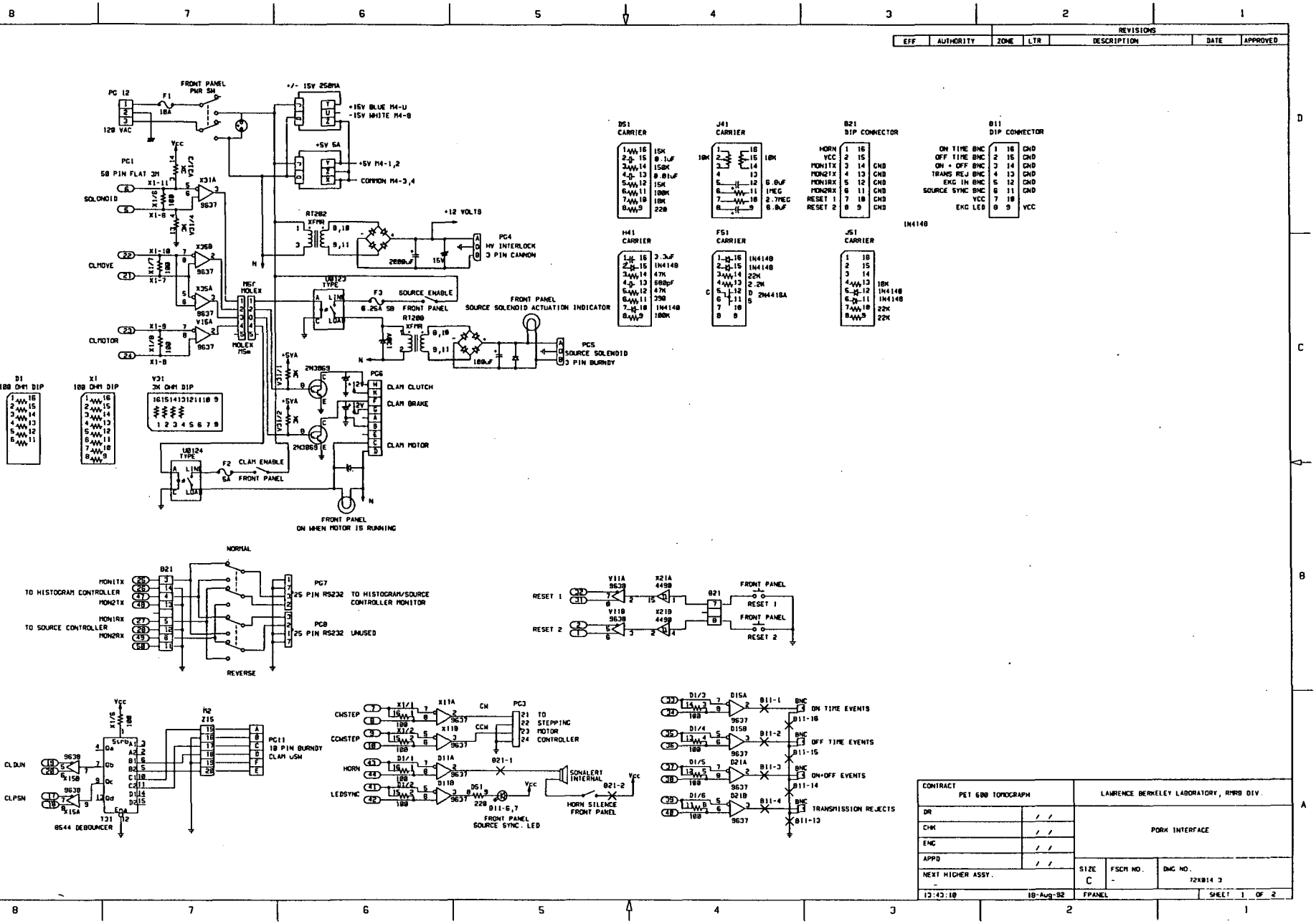
REVISIONS
EFF | AUTHORITY | ZONE | LTR | DESCRIPTION | DATE | APPROVED
FRONT PANEL PWR SW
+/- 15V 250MA
+15V BLUE M4-U
-15V WHITE M4-B
+5V 6A
+5V M4-1,2
COMMON M4-3,4
+12 VOLTS
HV INTERLOCK 3 PIN CANNON
SOURCE SOLENOID 3 PIN BURNDY
FRONT PANEL SOURCE SOLENOID ACTUATION INDICATOR
SOURCE ENABLE
CLAM ENABLE
CLAM CLUTCH
CLAM BRAKE
CLAM MOTOR
FRONT PANEL ON WHEN MOTOR IS RUNNING
50 PIN FLAT 3M
SOLENOID
CLMOVE
CLMOTOR
MOLEX
100 OHM DIP
3K OHM DIP
DS1 CARRIER
J41 CARRIER
B21 DIP CONNECTOR
B11 DIP CONNECTOR
H41 CARRIER
FS1 CARRIER
J51 CARRIER
IN4148
NORMAL
REVERSE
MONITX
TO HISTOGRAM CONTROLLER
MON2TX
MONITRX
TO SOURCE CONTROLLER
MON2RX
PG7
25 PIN RS232
TO HISTOGRAM/SOURCE CONTROLLER MONITOR
PG8
25 PIN RS232
UNUSED
RESET 1
RESET 2
FRONT PANEL
CLDUN
CLPSN
8544 DEBOUNCER
PG11
10 PIN BURNDY
CLAM WSH
CWSTEP
CCWSTEP
HORN
LEDSYNC
CW
CCW
TO STEPPING MOTOR CONTROLLER
SONALERT INTERNAL
HORN SILENCE FRONT PANEL
FRONT PANEL SOURCE SYNC. LED
ON TIME EVENTS
OFF TIME EVENTS
ON+OFF EVENTS
TRANSMISSION REJECTS
CONTRACT
PET 600 TOMOGRAPH
LAWRENCE BERKELEY LABORATORY, RMRB DIV.
DR
CHK
ENG
APPD
NEXT HIGHER ASSY.
PORK INTERFACE
SIZE C
FSCM NO. -
DWG NO. 72X814 3
13:43:10 18-Aug-92
FPANEL
SHEET 1 OF 2

INSIDE CONTROL PANEL

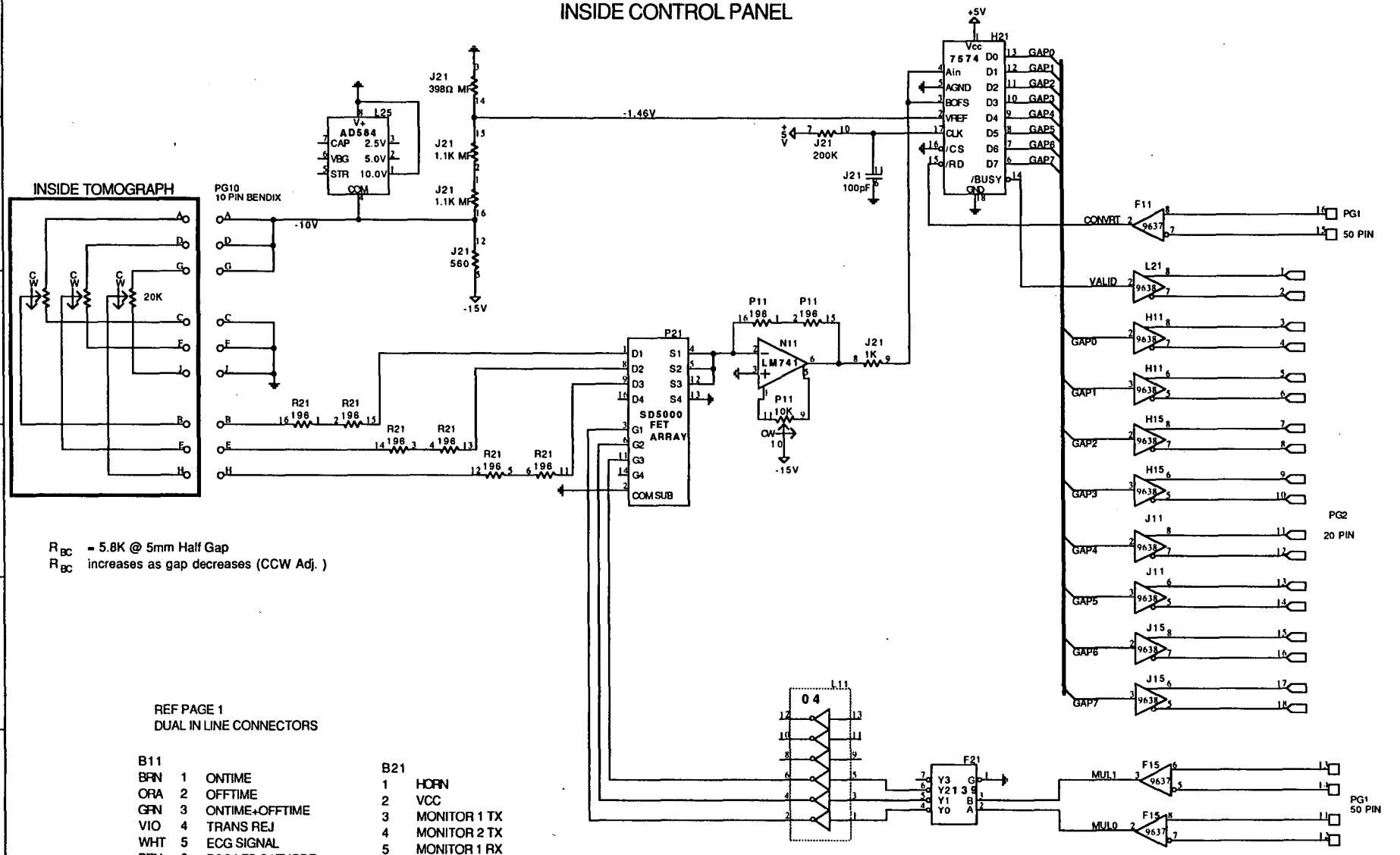

R_{BC} = 5.8K @ 5mm Half Gap
R_{BC} increases as gap decreases (CCW Adj.)

REF PAGE 1
DUAL IN LINE CONNECTORS

B11		
BRN	1	ONTIME
ORA	2	OFFTIME
GRN	3	ONTIME+OFFTIME
VIO	4	TRANS REJ
WHT	5	ECG SIGNAL
BRN	6	ECG LED CATHODE
ORA	7	+5V LED ANODE
GRN	8	
YEL	9	
RED	10	
BLK	11	GND
GRY	12	GND
BLU	13	GND
YEL	14	GND
RED	15	GND
BLK	16	GND

B21	
1	HORN
2	VCC
3	MONITOR 1 TX
4	MONITOR 2 TX
5	MONITOR 1 RX
6	MONITOR 2 RX
7	RESET 1 P.B.
8	RESET 2 P.B.
9	GND
10	GND
11	GND
12	GND
13	GND
14	GND
15	
16	

PG10
PG1
PG2

CONTRACT PET 600 TOMOGRAPH	LAWRENCE BERKELEY LABORATORY
DR M. HO	PORK INTERFACE*
CHK W. W. MOSES	GAP MEASUREMENT
ENG J. CAHOON	SIZE A / DWG NO 72X014 3
APPD	
8/20/92 9:11 AM	SHEET 2 OF 2

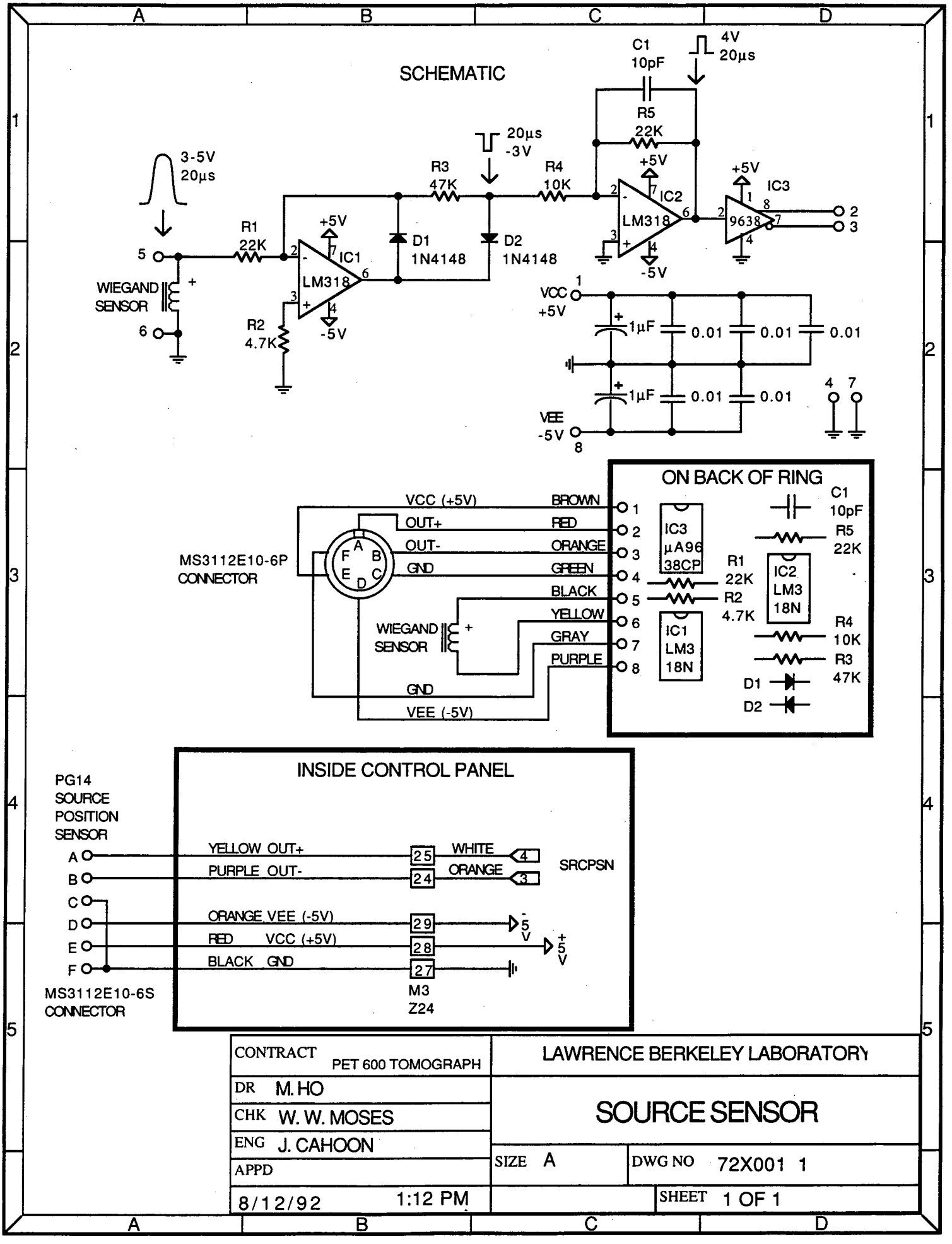

CONTRACT PET 600 TOMOGRAPH	LAWRENCE BERKELEY LABORATORY
DR M. HO	SOURCE SENSOR
CHK W. W. MOSES	
ENG J. CAHOON	SIZE A / DWG NO 72X001 1
APPD	
8/12/92 1:12 PM	SHEET 1 OF 1

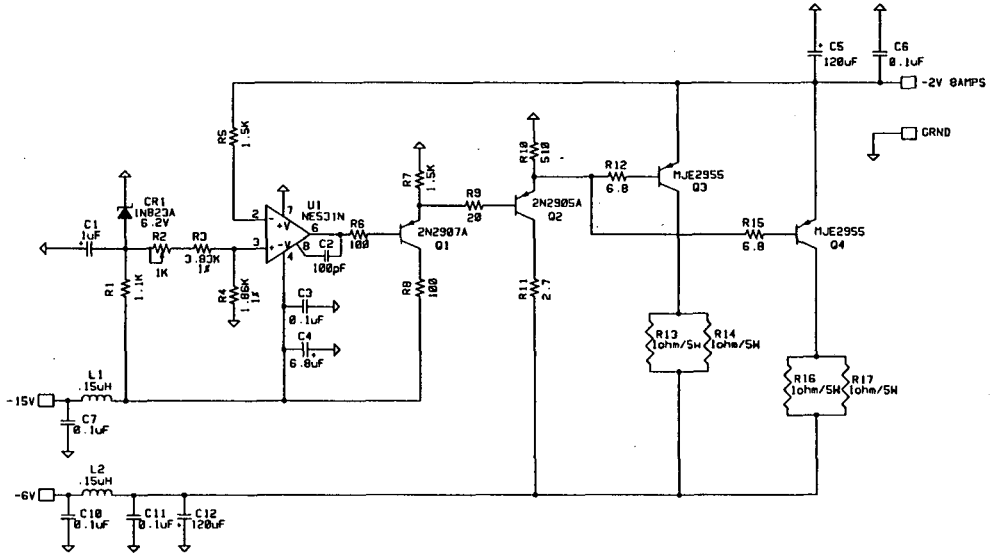

CONTRACT PET 600 TOMOGRAPH		LAWRENCE BERKELEY LABORATORY, RMRB DIV.	
DR	/ /	-2 VOLT REGULATOR	
CHK	/ /		
ENG	/ /		
APPD	/ /	SIZE C	FSCM NO. -
NEXT HIGHER ASSY. -		DWG NO. 72X008 3	
15:51:49	13-Jan-92	SUBREG	SHEET 1 OF 1

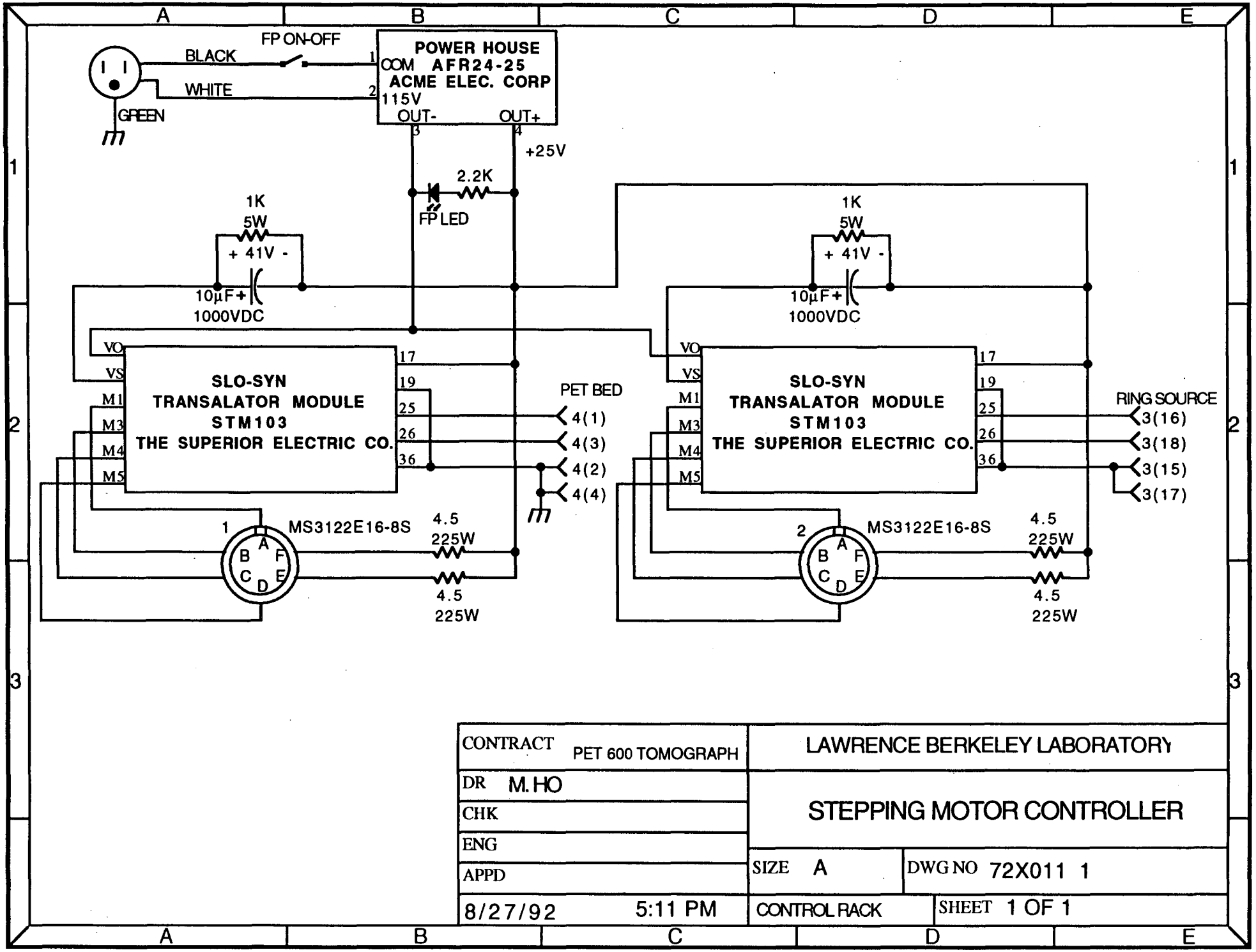
A
B
C
D
E
1
2
3
FP ON-OFF
BLACK
WHITE
GREEN
POWER HOUSE
COM AFR24-25
ACME ELEC. CORP
115V
OUT-
OUT+
+25V
2.2K
FP LED
1K
5W
+ 41V -
10µF+
1000VDC
VO
VS
M1
M3
M4
M5
SLO-SYN
TRANSALATOR MODULE
STM103
THE SUPERIOR ELECTRIC CO.
17
19
25
26
36
PET BED
4(1)
4(3)
4(2)
4(4)
RING SOURCE
3(16)
3(18)
3(15)
3(17)
MS3122E16-8S
4.5
225W
CONTRACT
PET 600 TOMOGRAPH
LAWRENCE BERKELEY LABORATORY
DR M. HO
CHK
ENG
APPD
STEPPING MOTOR CONTROLLER
SIZE A
DWG NO 72X011 1
8/27/92
5:11 PM
CONTROL RACK
SHEET 1 OF 1

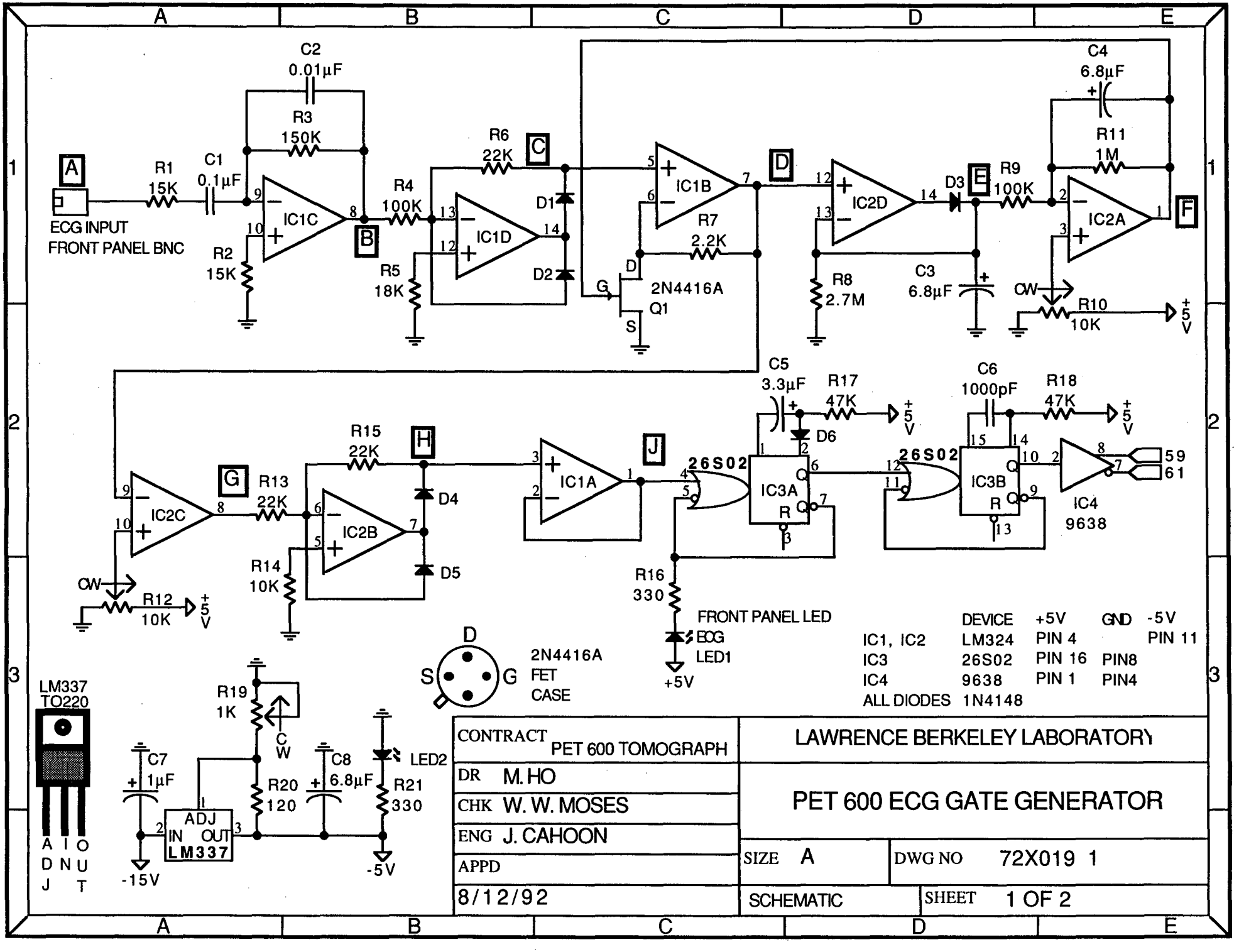
A
B
C
D
E
1
2
3
C2
0.01µF
R3
150K
R1
15K
C1
0.1µF
R6
22K
C4
6.8µF
R11
1M
R9
100K
D3
R4
100K
IC1C
IC1D
IC1B
IC2D
IC2A
R2
15K
R5
18K
D1
D2
R7
2.2K
2N4416A
Q1
R8
2.7M
C3
6.8µF
R10
10K
ECG INPUT
FRONT PANEL BNC
+5V
C5
3.3µF
R17
47K
C6
1000pF
R18
47K
D6
R15
22K
R13
22K
R14
10K
IC2C
IC2B
IC1A
IC3A
IC3B
IC4
9638
26S02
R12
10K
D4
D5
R16
330
FRONT PANEL LED
ECG
LED1
59
61
DEVICE +5V GND -5V
IC1, IC2 LM324 PIN 4 PIN 11
IC3 26S02 PIN 16 PIN8
IC4 9638 PIN 1 PIN4
ALL DIODES 1N4148
2N4416A
FET
CASE
LM337
TO220
ADJ
IN OUT
R19
1K
R20
120
R21
330
C7
1µF
C8
6.8µF
LED2
-15V
-5V
CONTRACT PET 600 TOMOGRAPH
LAWRENCE BERKELEY LABORATORY
DR M. HO
CHK W. W. MOSES
ENG J. CAHOON
APPD
8/12/92
PET 600 ECG GATE GENERATOR
SIZE A
DWG NO 72X019 1
SCHEMATIC
SHEET 1 OF 2
52

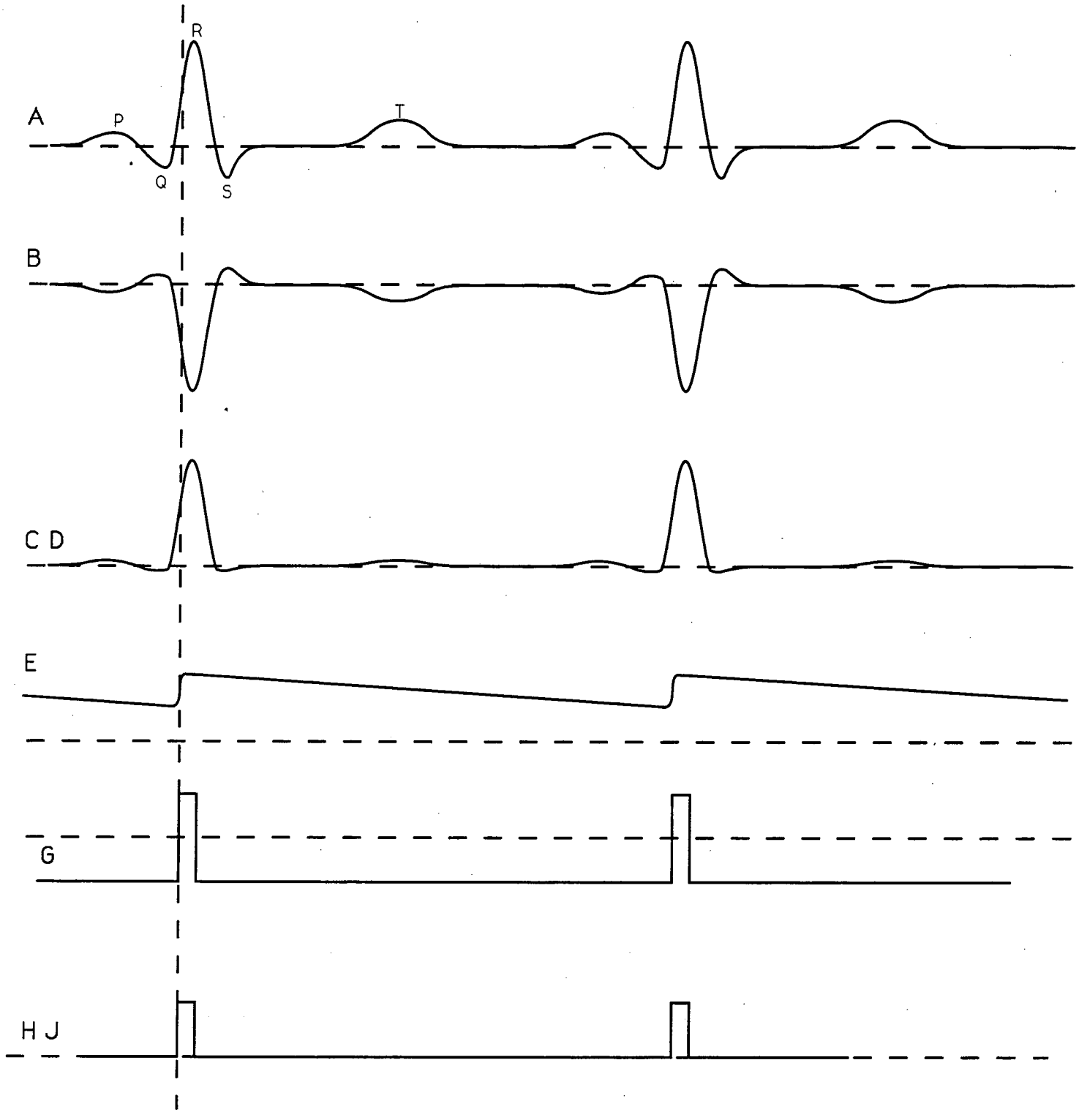

CONTRACT PET 600 TOMOGRAPH		LAWRENCE BERKELEY LABORATORY	
DR M. HO		PET 600 ECG GATE GENERATOR	
CHK W. W. MOSES			
ENG J. CAHOON			
APPD	SIZE A	DWG NO. 72X019 1	
2/7/92	WAVEFORM	SHEET 2 OF 2	

EQUIVALENT TO REMOTE POSITION DISPLAY UNIT IN DRAWING NUMBER 13X463-S1
DIFFERENCES: LARGER DISPLAY (1.04 INCH)
NO CLUTCH ON/OFF SWITCH (BURNDY CONNECTOR, PIN U)
NO COMPUTER/LOCAL SWITCH (BURNDY CONNECTOR, PIN V)

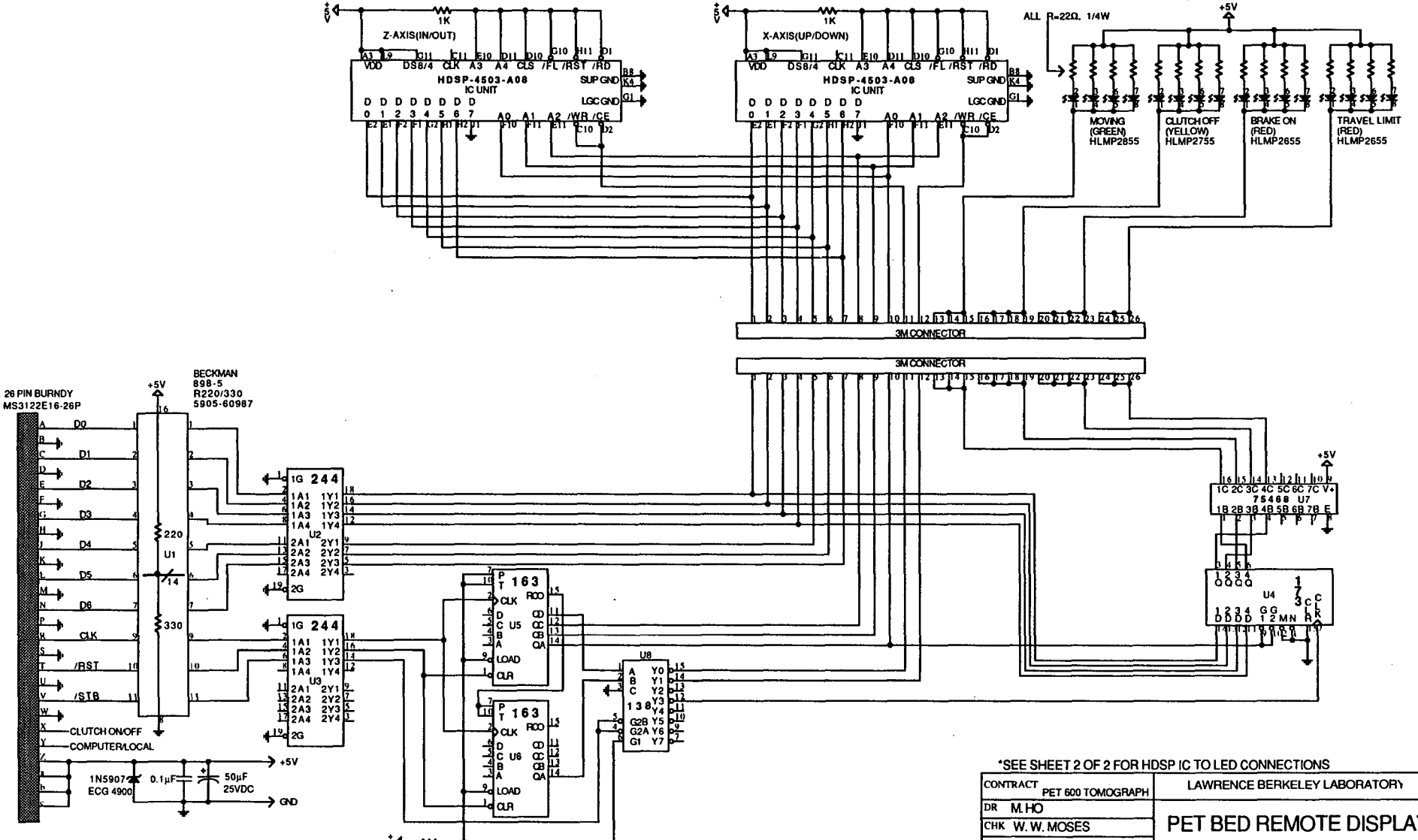

CONTRACT	PET 600 TOMOGRAPH	LAWRENCE BERKELEY LABORATORY
DR	M.HO	PET BED REMOTE DISPLAY
CHK	W. W. MOSES	
ENG	GLENN SKIPPER	
APPD		SIZE A / DWG NO 72X021 3
8/12/92	4:59 PM	SHEET 1 OF 2

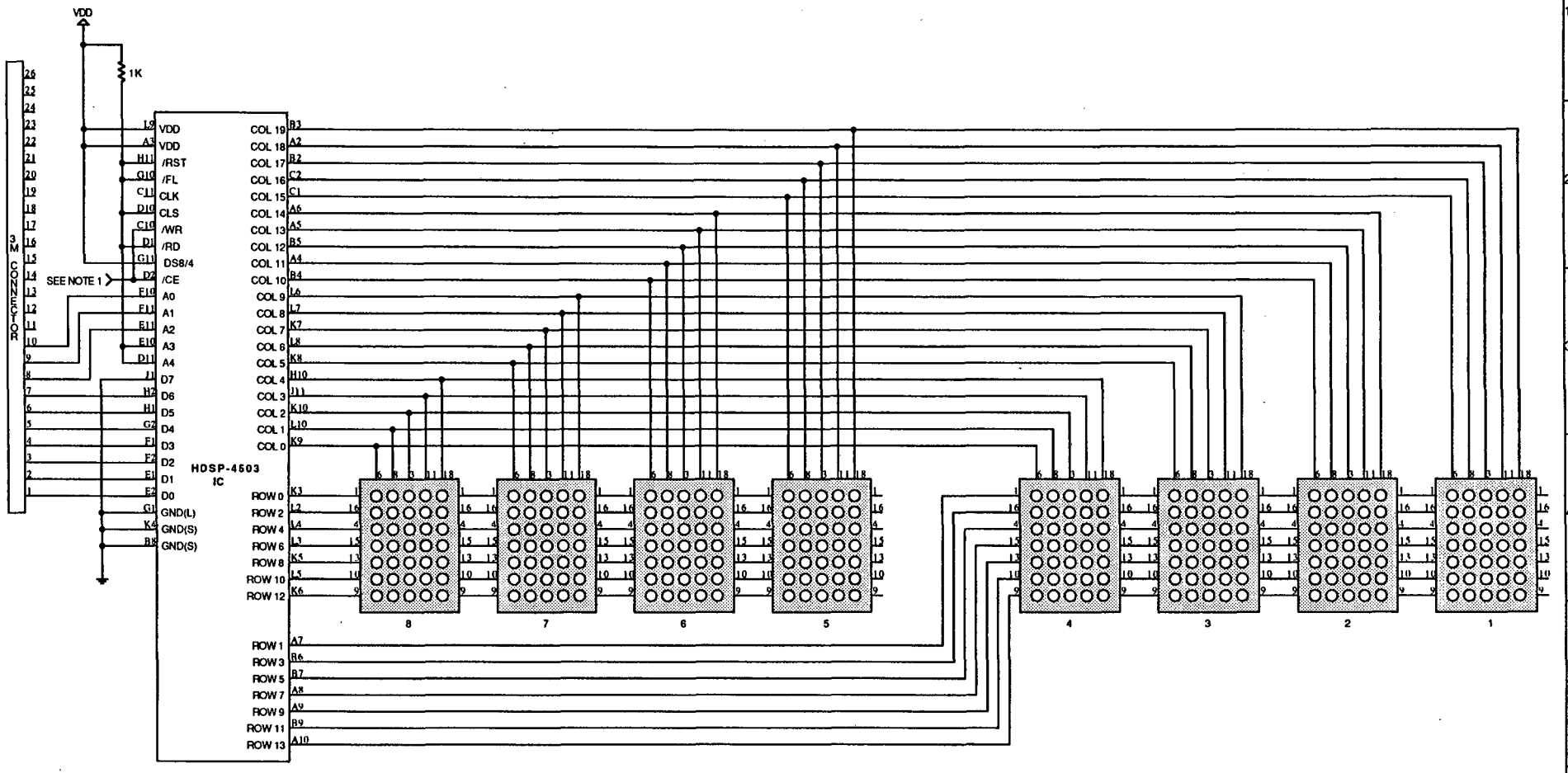

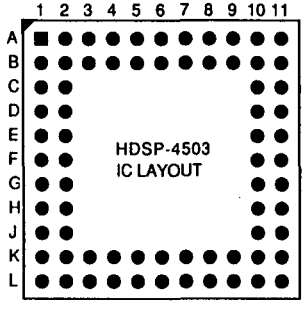

NOTE 1: X-AXIS IC CONNECTS TO PIN 12 OF THE 3M CONNECTOR
Z-AXIS IC CONNECTS TO PIN 11 OF THE 3M CONNECTOR
PIN 1 TO 10 ARE CONNECTED TO BOTH IC'S.

CONTRACT PET 600 TOMOGRAPH	LAWRENCE BERKELEY LABORATORY
DR M.HO	PET BED REMOTE DISPLAY
CHK W. W. MOSES	HDSP IC TO LED CONNECTION
ENG GLENN SKIPPER	SIZE A / DWG NO 72X021 1
APPD	
8/12/92 4:59 PM	SHEET 2 OF 2

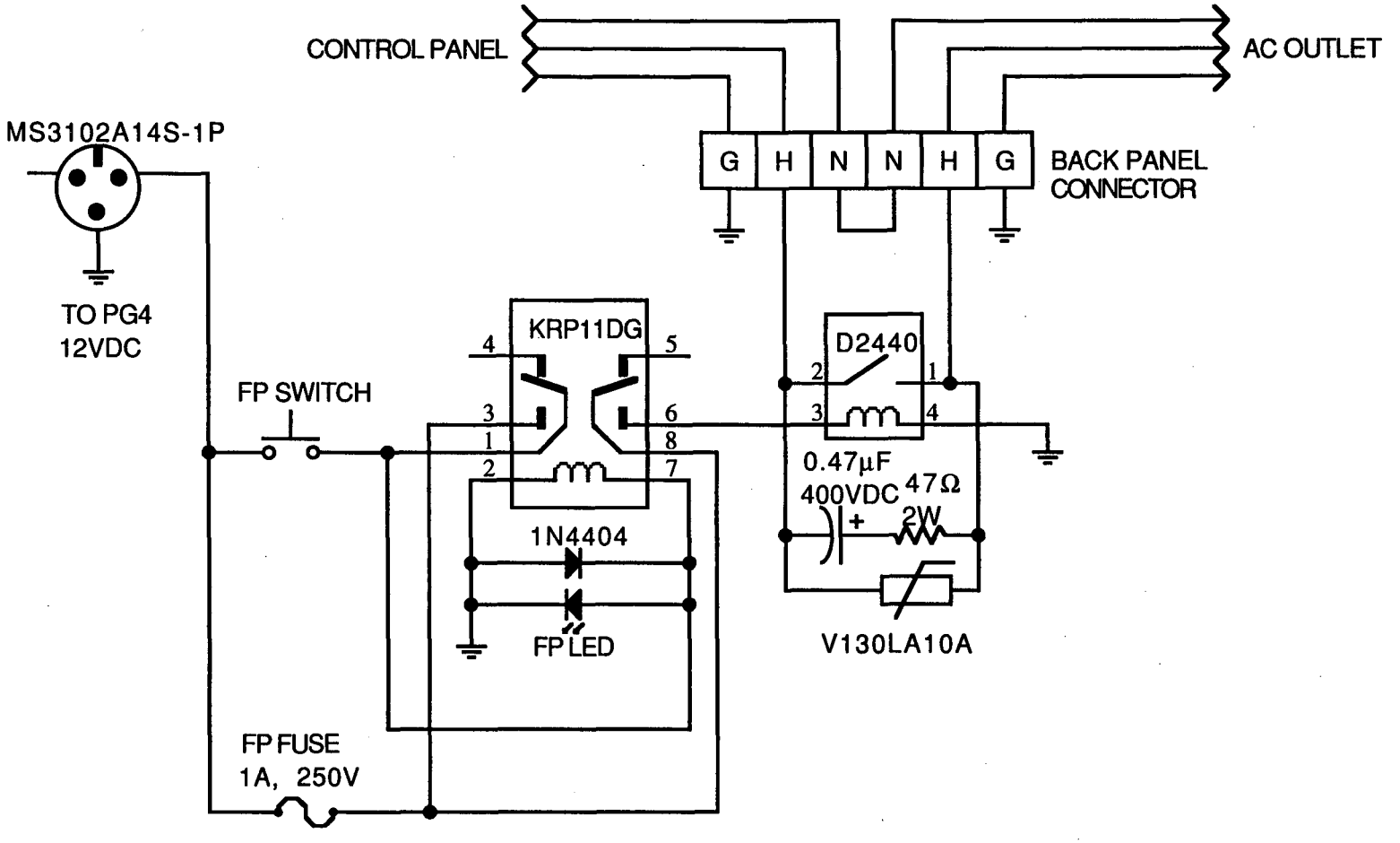

KRP11DG RELAY:
POTTER&BRUMFIELD
12VDC COIL
120VAC, 10A

D2440 RELAY:
CRYDOM SOLID STATE RELAY
3-32 VDC COIL
240VAC, 40A

CONTRACT PET 600 TOMOGRAPH	LAWRENCE BERKELEY LABORATORY
DR M. HO	HIGH VOLTAGE INTERLOCK
CHK W. W. MOSES	
ENG J. CAHOON	SIZE A / DWG NO 72X022 1
APPD	
8/12/92 5:00 PM	SHEET 1 OF 1

LAWRENCE BERKELEY LABORATORY
UNIVERSITY OF CALIFORNIA
TECHNICAL INFORMATION DEPARTMENT
BERKELEY, CALIFORNIA 94720