Title

Emerging Solutions to the Standby Power Problem

Authors

Gerber, Daniel

Meier, Alan

Hosbach, Robert

et al.

Publication Date

2023-12-12

Peer reviewed

Emerging Solutions to the Standby Power Problem

Daniel L. Gerber, Lawrence Berkeley National Laboratory
Alan Meier, Lawrence Berkeley National Laboratory
Robert Hosbach, Lawrence Berkeley National Laboratory
Richard Liou, University of California Berkeley

ABSTRACT

Despite technical advances in efficiency, devices in standby continue to consume a significant amount of energy. Finding practical, cost-effective reductions is difficult. While the power consumption per unit has fallen, the number of units continuously drawing power continues to grow.

This work investigates a family of technologies that offers a means of greatly reducing standby consumption in many types of electrical products. The underlying principle involves producing a wake-up signal just before service is needed. The wake-up signal activates a footer switch, which connects the device to the power supply. This work studies and prototypes several methods of generating the wake-up signal. The first generates a wake-up signal from harvested light energy and is applicable to remote-controlled devices with a line of sight activation, such as set-top boxes, ceiling fans, and motorized curtains. The second method uses an RF-based wake-up signal to activate a wake-up radio and is applicable to any wireless products. No single technology will address all standby power situations; however, these emerging solutions appear to have broad applicability to save standby energy in miscellaneous loads.

Introduction

Standby power consumption by appliances, electrical devices, and other products continues to represent a significant 3-16% (varies by country) of residential energy use (IEA 2001). Considerable progress in reducing standby in specific products has been achieved through a variety of policies and technologies. For example, technical advances in mobile phone chargers, the poster child of standby consumption, have enabled reductions in standby power from more than 2 W in the year 2000 to below 0.3 W today. Most new low-voltage power supplies have standby power consumptions below 0.5 W, reflecting minimum energy efficiency standards in Europe, California, and elsewhere (IEA 2014).

However, the last twenty years has seen an explosion in the number of devices that rely on power supplies and continuous power consumption. The growth can be attributed to the proliferation of devices that require DC power, traditional AC-powered devices that now have electronics, and mobile devices with batteries. Many of these devices fall into the miscellaneous

electrical loads (MELs) category, which continues to grow rapidly in terms of both population and energy use (Comstock and Jarzomski 2012) . At the same time, many more devices require higher functionality in order to sustain communications. These devices fall into the broad category of the “internet of things” (IoT).

The need to reduce standby power therefore continues to be an important policy and technical challenge. However, the main challenge is now in the declining potential savings per device, coupled with the increasing number and diversity of electronic products with standby modes. This means that costs of “saving the last watt” must be extraordinarily low to be cost-justified. For reference, saving one watt corresponds to only 8.8 kWh/year, or about one dollar at residential electricity rates.

This work describes several approaches to further reductions in standby power consumption, some of which completely eliminate standby. The tremendous diversity of products with standby consumption means that no single solution is likely to emerge. Instead, a portfolio of widely-applicable solutions presents the best path forward, and this work contributes to the portfolio.

General Approach to Standby Reduction

The energy consumption behavior of a device can be represented in a histogram showing the time it spends in each power mode. As shown in Figure 1, most modern devices have a continuous low-power standby consumption, with brief intermittent periods of high-power operation. They may utilize other intermediate power modes which, if relatively low, may be lumped into the standby category. The area under the curve corresponds to the device’s annual energy consumption. Our solutions target the long periods of very low power use and, ultimately, the other low power modes. The goal is to reduce the power and duration of those modes, in a savings strategy referred to as “shrinking the staircase”, which is also illustrated in Figure 1.

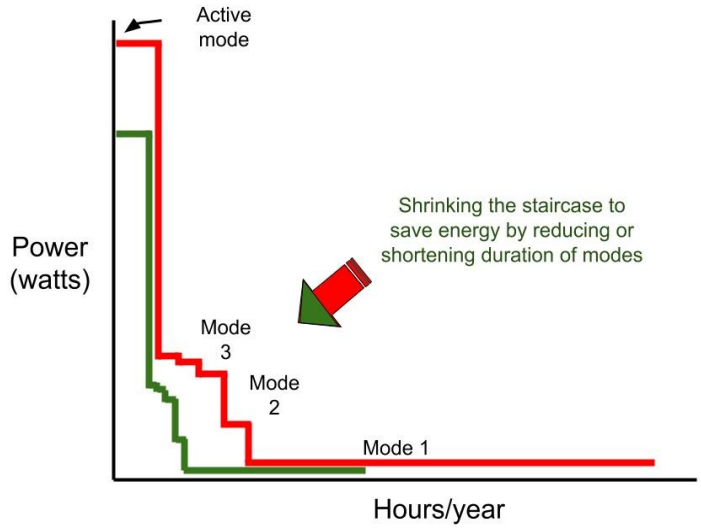

Figure 1. An example of the distribution of an electrical device's power modes with respect to time. The red "staircase" represents the initial modes and the green staircase represents the impact of numerous energy-saving modifications.

There are several technical strategies for "shrinking the staircase", that is, reducing standby energy consumption. First is increasing the device's efficiency at various modes, which lowers overall power consumption. Another technique involves augmenting the device to harvest and store ambient energy, which can be utilized in low power operation. Finally, modifications in operational design and internal circuitry can remove consumption at various low power modes altogether, depending on application. This paper focuses on the latter technique, and describes several methods for removing standby consumption.

The strategies applied to a power supply are generalized and illustrated in Figure 2. In certain applications of these strategies, the device will be able to operate for periods of time without any grid-supplied power (Ellis, Mark, Siderius, and Lane 2015). The no-grid power time has been termed the "standzero" time (Meier and Siderius 2017). Many mobile devices already have long standzero times, and the solutions described in this paper illustrate standzero strategies in various other types of devices.

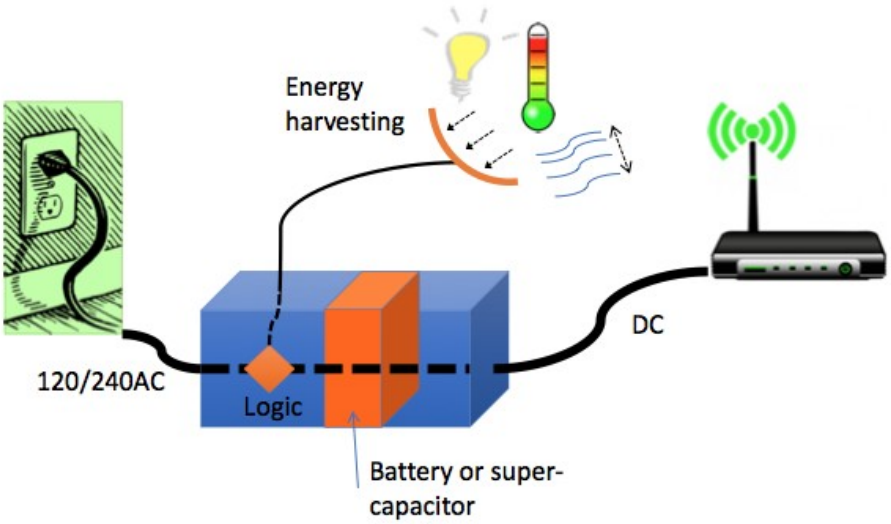

Figure 2. A generalized power supply that leverages energy harvesting, storage, and/or other mechanisms to reduce standby power consumption.

Many of these techniques involve the use of a footer switch to electrically disconnect the main device from the power supply. A footer switch, shown in Figures 3 and 4, is an N-type MOSFET that connects the ground of the main device to the ground of the power supply. Due in part to their simplicity and reliability, footer switches have become a recent favorite in standby reduction techniques (Fukuoka et al. 2012; 2013).

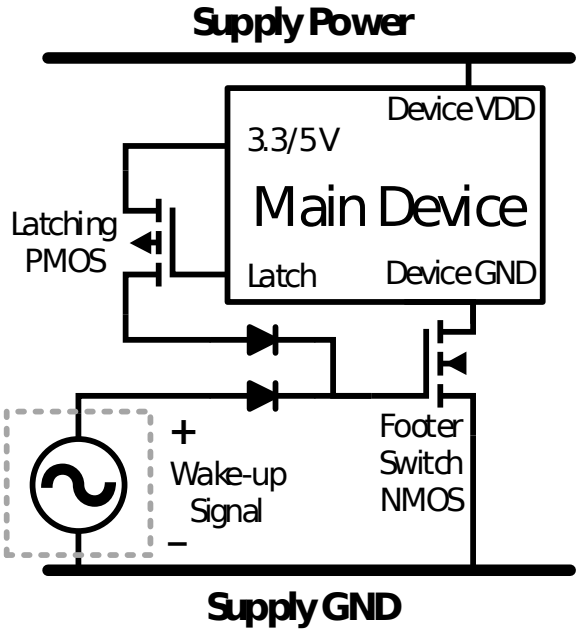

Figure 3. A footer switch connects the device ground to the supply ground. A wake-up signal is required to drive the gate of the footer switch.

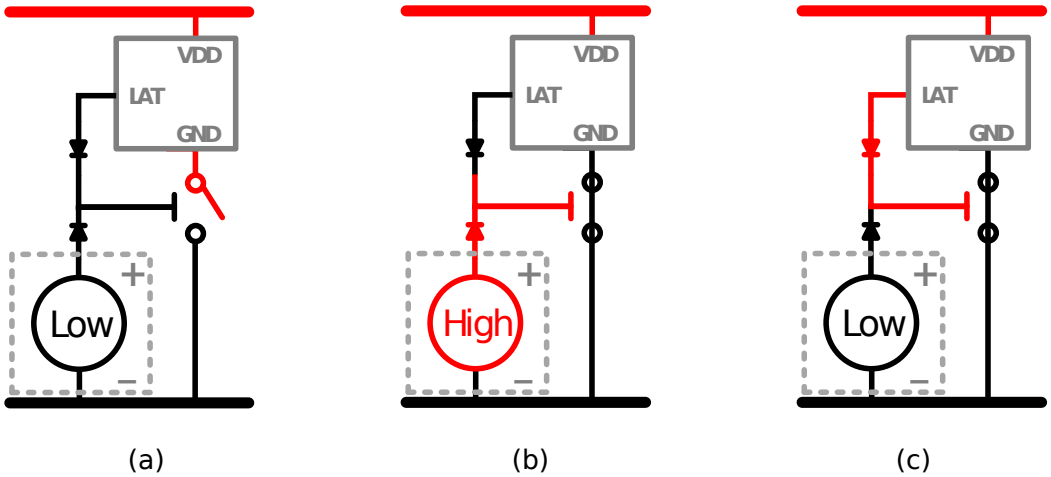

Figure 4. Operation of a footer switch. (a) The device ground is disconnected from supply ground in standby mode. (b) When the wake-up signal goes high, the device ground is connected to supply ground, and the device receives power. (c) The device must latch the gate of the footer switch in order to remain powered, even if the wake-up signal goes low.

The footer switch allows the main device to completely shut down, resulting in zero standby power consumption. However, the device can only turn on if a sufficient wake-up drive signal is provided to the gate of the footer switch. Once awake, the device must also latch the gate of the footer switch high so as to maintain its connection to the supply ground. After completing its operation, the device can return to a zero standby mode by unlatching the footer switch gate. Several works detail various methods for providing this wake-up signal. Footer switches can have drawbacks such as on-state resistance and leakage current, but these drawbacks can usually be mitigated by proper MOSFET selection.

IR Energy Harvesting

Several papers propose infrared (IR) energy harvesting from a remote as a wake-up drive signal as shown in Figure 5. Yamawaki and Serikawa (2015) describe a method for driving the footer switch using IR energy harvested with a photodiode. This method has the potential to achieve zero standby consumption in set-top boxes and other remote-controlled devices. It can also be useful for remote electronics that are not internet-connected, such as lights, ceiling fans, and curtains. However, the wide-beam nature of the IR LEDs in the remote causes much of the transmission power to be dispersed. As a result, the transmission range for consistent successful wake-up is limited to 3 m, which poses a practical constraint. Kang et al. (2011) proposed a similar method that involved using a 15 mW IR laser to drive a relay, but their work yielded a similar range of 2 m.

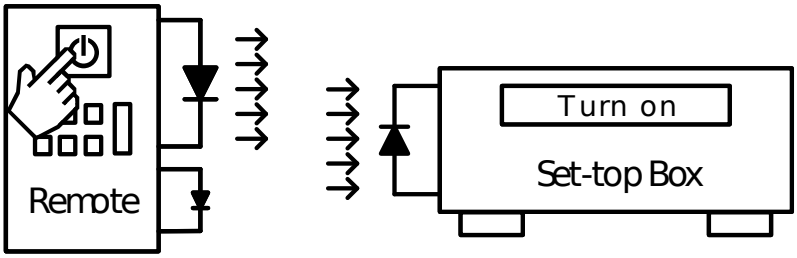

(a)

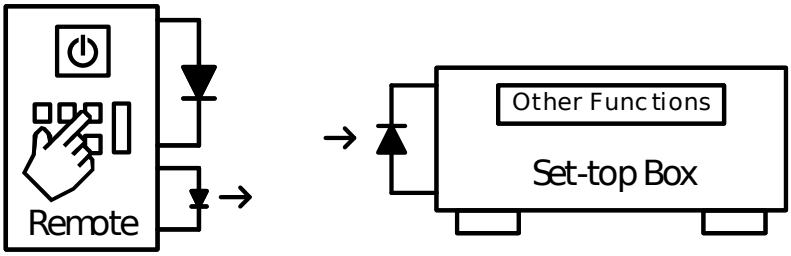

(b)

Figure 5: Proposed IR energy harvesting method for set-top boxes. (a) When the power button is pressed, a high power IR signal is transmitted to wake the device. (b) Once the device is awake, ordinary low power IR signals can be used for all other functions (e.g., changing the channel).

The IR-based prototype discussed in this paper is based on the architecture developed by Yamawaki and Serikawa (2015). As shown in Figure 6, the method uses a photodiode array at the receiver to harvest energy from a high-power IR transmission at 38 kHz. The photodiode array generates an output voltage relative to the transmission strength and the number of photodiodes illuminated by the beam. In order to activate a typical mid-power 50 V footer switch, the photodiode array usually needs to generate about 0.5-0.8 V. In this application, the output of the photodiode array is passed through a 38 kHz band-pass filter and rectified to provide an appropriate wake-up signal at the gate of a footer switch. As discussed earlier, the footer switch acts as the connection point to ground for the device; therefore, prior to the gate being activated by the IR signal, the device consumes no power.

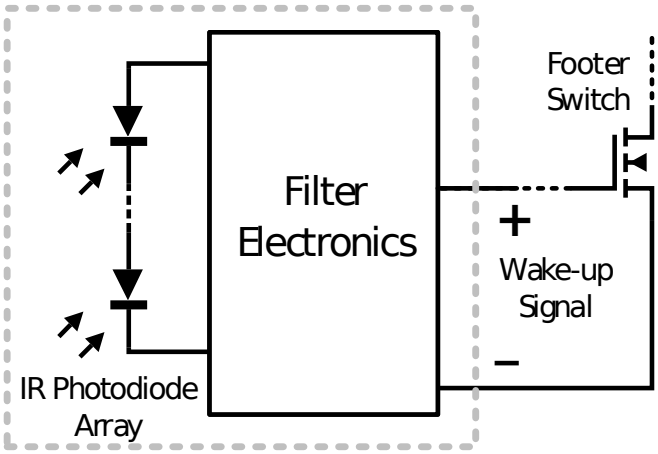

Figure 6. The receiver for a zero standby supply with an IR-based wakeup signal. The photodiode harvests IR energy from the IR signal, which drives the gate of the footer switch.

A prototype, shown in Figure 7, was developed in order to test the practicality of the IR-based zero standby method. The transmitter provides fourteen-watt pulses to four IR LEDs, and the receiver contains an array of twelve photodiodes. Although the prototype can successfully attain zero standby power consumption, it has two practical shortcomings. First, the IR LEDs have a relatively wide beam angle, which greatly limits the transmission range. The prototype has a transmission range that is only reliable up to a meter. Second, in order to push for longer transmission ranges, the IR LEDs must be well aligned with the photodiode array, despite their wide beam. Since IR emissions are not visible to the naked eye, it is difficult to manually make this alignment. Another approach to overcome these drawbacks is to use a laser to activate the footer switch, rather than an IR signal.

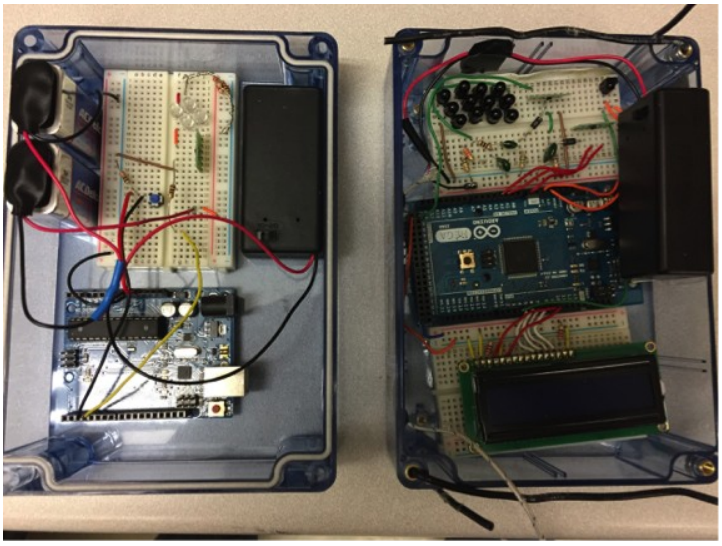

Figure 7. A prototype of the IR-based zero standby supply. The remote control with four clear IR LEDs is shown on the left, the receiver with 12 dark photodiodes and the device (LCD screen) are shown on the right.

Laser Energy Harvesting

To address the IR method’s shortcomings, a laser-based zero standby supply was developed. Similar to the IR-based supply, the laser-based supply harvests light energy to drive the gate of a footer switch. The difference here is that the harvested light is visible to the naked eye. The advantages of a visible-light laser are that it is easy to aim and its narrow beam provides enough range to wake a device from across the room.

The circuit topology of the laser-based receiver is very similar to the IR-based receiver in Figure 6, with two main differences. First, the laser-based receiver only needs a single photodiode to operate. However, it can be difficult to dexterously aim the laser pointer at a single photodiode, and a photodiode array can still be helpful. Second, the laser-based receiver requires a voltage step-up circuit.

The need for a voltage step-up circuit is related to the safety concerns relevant to high-power lasers. Any laser with an instantaneous power greater than 5 mW (laser class IIIa) is subject to strict regulations. As such, the transmitter is limited to operate below 5 mW, which is similar to a common laser pointer. This presents a challenge since most affordable photodiodes cannot generate the requisite gate-drive voltage (0.5-0.8 V) from 5 mW. To address this challenge, the laser-based supply uses a charge pump circuit to step-up the output of the photodiode. The Dickson charge pump is a particularly convenient step-up circuit in harvesting applications since it is can be completely self-powered.

A prototype, shown in Figure 8, was built from inexpensive off-the shelf components. It uses a four-stage Dickson charge pump to step-up the photodiode voltage. Like the IR-based receiver, the laser-based prototype can successfully receive a wake-up signal and activate a footer switch.

However unlike the IR-based prototype, it can function at nearly limitless range. Overall, the laser-based method can arguably be useful in reducing standby power consumption in set-top boxes and other similar devices.

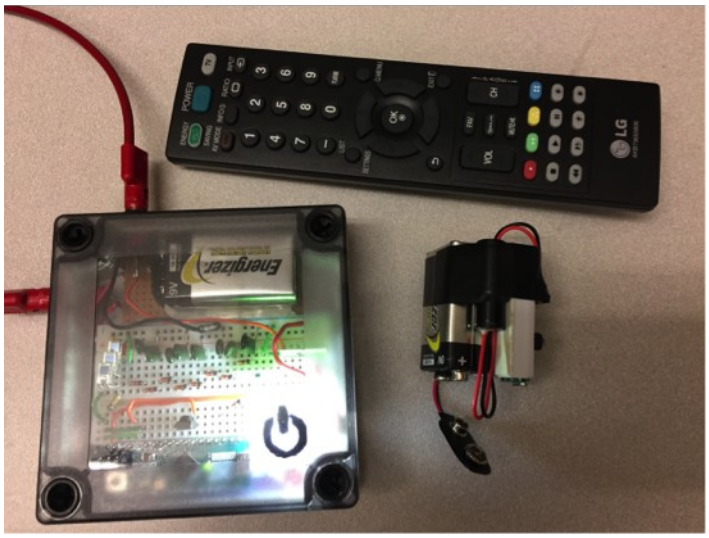

Figure 8. A prototype of the laser-based zero standby supply. The receiver is shown on the left, the laser on the right, and the low power IR remote on the top, which would contain the laser in practice.

Wake-up Radio

A radio frequency (RF)-based wake-up signal is appealing due to the proliferation of wirelessly connected technologies that contain a built-in transceiver and antenna. Various ideas have been proposed for ambient or broadcasted RF harvesting (Kim et al. 2014; Lu et al. 2015). However, in most cases, the amount of transmission power required for pure RF harvesting makes it difficult to justify its use in plug-load applications.

For plug-loads, the wake-up radio (WuR) presents a more appealing method for providing a wake-up signal. WuRs are a family of ultra-low power receivers that are designed solely to wake the main device from sleep mode (Demirkol, Ersoy and Onur 2009; Magno et al. 2014). At present, most research in WuRs is applied to prolonging battery life in remote IoT applications. Some works, such as Umeda and Otaka (2007), propose the application of WuRs in plug loads. As shown in Figure 9, WuRs are electrically separate from the device’s primary high-power transceiver, but share the same antenna. They can be programmed to be individually addressable, thus allowing the wake-up broadcast to wake individual devices.

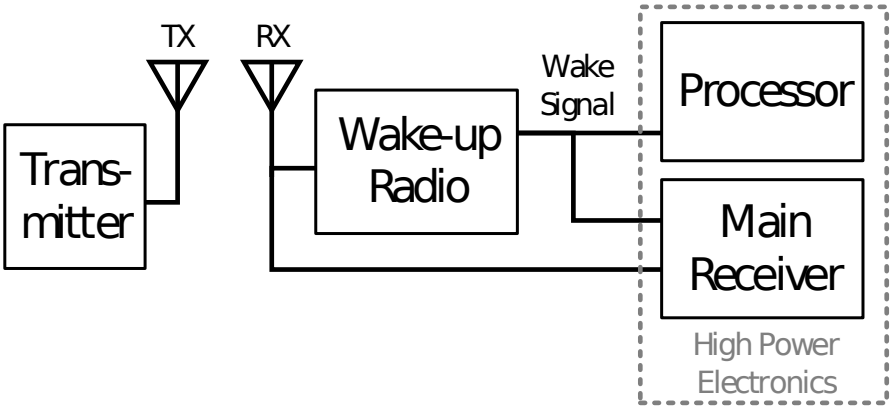

Figure 9. The microwatt wake-up radio can share an antenna with the high-power transceiver.

Modern and future trends in electronics suggest that many devices and appliances will be wirelessly IoT connected. Even set-top boxes and remotes have began to transition from an IR to a wifi connection. Devices in standby will require an addressable RF-based wakeup signal, and as previously mentioned, RF energy harvesting is impractical in its current form. Although the WuR does not strictly allow for zero standby consumption, its microwatt consumption is practically negligible. The advantages of a WuR are in its utility and addressability. At present, WuRs are most commonly used in battery-powered wireless applications. This research aims to demonstrate that WuRs can also be employed for standby power reduction in plug loads.

As shown in Figure 10, plug load WuRs can toggle a footer switch similar to the IR- and laser-based methods. Unlike these methods, the WuR requires a constant current of several microamps to function. While the wall adapter can provide this current, many AC/DC converters do not operate efficiently at low power. In addition, the wakeup radio might operate at a lower voltage compared to the rest of the device electronics. As such, this work recommends the use of a large supply capacitor to power the WuR at its operating voltage. The supply capacitor requires periodic recharging, which can be achieved through a technique analogous to burst mode. With these modifications, the WuR can function as an effective means of reducing standby power in plug loads.

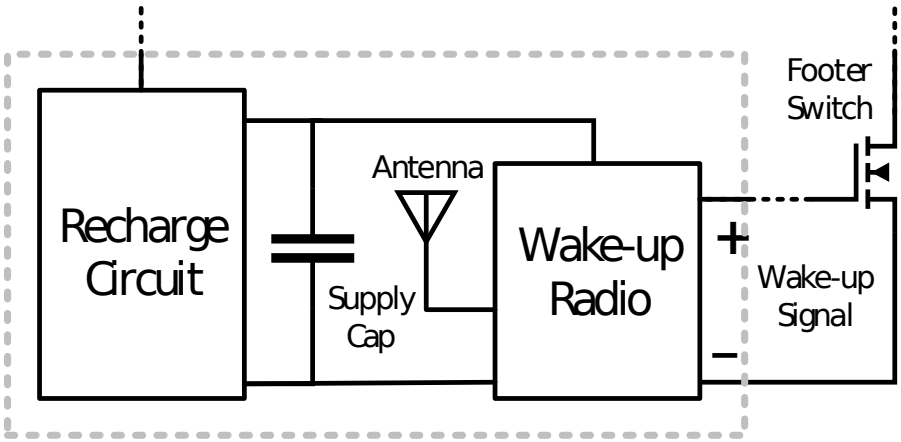

Figure 10. Block diagram for how the WuR can be used to reduce standby power consumption in plug loads.

A prototype of the WuR method, shown in Figure 11, was developed using the AS3932 WuR chip. This prototype uses near-field magnetic coupling at 125 kHz to turn the device on from across the room. However, its range is relatively limited at 3 m, and heavily affected by shielding from metal in the walls or table. Nonetheless, various techniques have demonstrated the AS3932 to work with an 868 MHz (or even higher) input at a range of 50 m (Gamm et al. 2010, Oller et al. 2013). With proper antenna design, the prototype in this work can be upgraded to wake its plug load at a similar range.

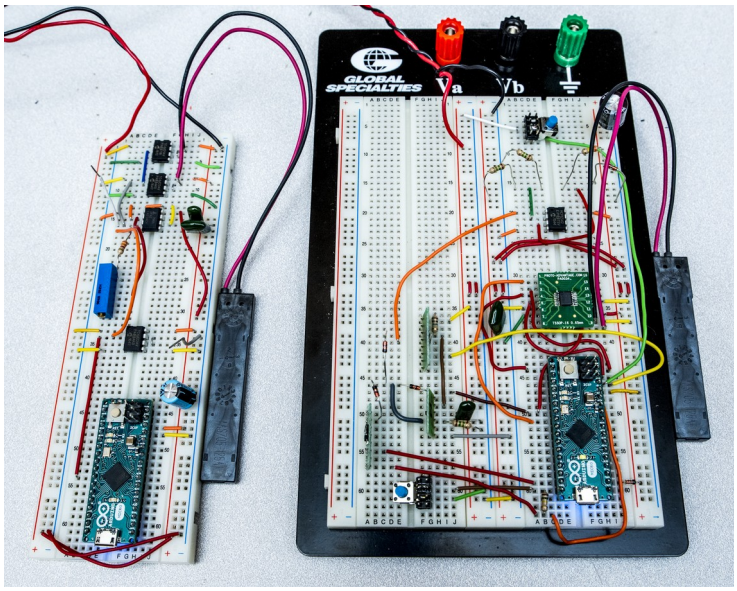

Figure 11. Prototype of the WuR method for standby power reduction.

Conclusion

Improvements to power supplies have drastically reduced standby consumption over the last twenty years. However, the need for standby power reduction persists due to the increasing population of devices with standby consumption. Since modern electronics are very diverse in application and requirements, this work suggests a portfolio of solutions to tackle standby power consumption in miscellaneous electrical loads. Several such solutions were presented and prototyped. The first uses IR energy harvesting to activate a footer switch and wake the device. The second instead harvests visible light energy from a laser pointer. The third solution uses a wake-up radio to activate the footer switch. As IoT technology transitions loads to become small and numerous, intensive standby reduction will be crucial for energy-efficient products.

This work demonstrates zero or near-zero standby power is technically feasible in several families of products. These solutions have both advantages and drawbacks and will require technical improvements and reductions in cost before they can be commercialized. In addition, the portfolio of solutions will need to be broadened before standby power use can be confidently—and economically—eliminated.

Acknowledgements

This work was supported by the California Energy Commissions EPIC Project EPC-15-024. Special thanks to the reviewers and editors.

References

IEA. 2001. *Things That Go Bleep in the Night: Standby Power and How to Limit It*. Paris: International Energy Agency.

Ellis, Mark, Hans-Paul Siderius, and Kevin Lane. 2015. “Closing the Gap towards Net Zero Energy Appliances.” In *ECEEE 2015 Summer Study Proceedings*. Vol. 1-038-15. Hyères, France: European Council for an Energy-Efficient Economy. http://proceedings.eceee.org/visabstrakt.php?event=5&doc=1-038-15.

Comstock, Owen, and Kevin Jarzomski. 2012. “Consumption and Saturation Trends of Residential Miscellaneous End-Use Loads.” In *2012 ACEEE Summer Study on Energy Efficiency in Buildings*. Pacific Grove: ACEEE.

Meier, Alan, and Hans-Paul Siderius. 2017. “Should the next Standby Power Target Be 0-Watt?” In *Eceee 2017 Summer Study – Consumption,*

Efficiency & Limits. Presqu'île de Giens, Hyeres, France: European Council for an Energy-Efficient Economy.

IEA. 2014. *More Data, Less Energy*. Paris: International Energy Agency.

Yamawaki, Akira, and Seiichi Serikawa. 2015. "Power Supply Circuit with Zero Standby Power Consumption on Infrared Remote Controlled Product by Using Energy Harvesting." In Proceeding of the International MultiConference of Engineers and Computer Scientists 2015. Vol. 2. Hong Kong. http://www.iaeng.org/publication/IMECS2015/IMECS2015_pp655-660.pdf.

S. Kang, K. Park, S. Shin, K. Chang and H. Kim, "Zero standby power remote control system using light power transmission," in IEEE Transactions on Consumer Electronics, vol. 57, no. 4, pp. 1622-1627, November 2011. http://ieeexplore.ieee.org/stamp/stamp.jsp?tp=&arnumber=6131134&isnumber=6131104

K. Fukuoka et al., "Power-Management Features of R-Mobile U2, an Integrated Application Processor and Baseband Processor," in IEEE Micro, vol. 33, no. 6, pp. 26-36, Nov.-Dec. 2013. http://ieeexplore.ieee.org/stamp/stamp.jsp?tp=&arnumber=6636316&isnumber=6684176

K. Fukuoka et al., "A 123µW standby power technique with EM-tolerant 1.8V I/O NMOS power switch in 28nm HKMG technology," Proceedings of the IEEE 2012 Custom Integrated Circuits Conference, San Jose, CA, 2012, pp. 1-4. http://ieeexplore.ieee.org/stamp/stamp.jsp?tp=&arnumber=6330708&isnumber=6330557

Chao, Bob, and Harrison, Linden. "Re-designing normally-on load switches with zero-power MOSFETs reduces power consumption." Advanced Linear Devices (2008). http://www.digikey.cn/Web%20Export/Supplier%20Content/AdvancedLinearDevices_1014/pdf/ald-tech-redesign-with-zero-power-mosfet.pdf

I. Demirkol, C. Ersoy and E. Onur, "Wake-up receivers for wireless sensor networks: benefits and challenges," in IEEE Wireless Communications, vol. 16, no. 4, pp. 88-96, Aug. 2009. http://ieeexplore.ieee.org/stamp/stamp.jsp?tp=&arnumber=5281260&isnumber=5281242

M. Magno, S. Marinkovic, B. Srbinovski, and E. M. Popovici. "Wake-up radio receiver based power minimization techniques for wireless sensor networks: A review." Microelectronics Journal 45, no. 12 (2014): 1627-1633. https://www.sciencedirect.com/science/article/pii/S002626921400264X

G. U. Gamm, M. Sippel, M. Kostic and L. M. Reindl, "Low power wake-up receiver for wireless sensor nodes," 2010 Sixth International Conference on Intelligent Sensors, Sensor Networks and Information Processing, Brisbane, QLD, 2010, pp. 121-126. http://ieeexplore.ieee.org/stamp/stamp.jsp?tp=&arnumber=5706778&isnumber=5706733

J. Oller, I. Demirkol, J. Casademont, J. Paradells, G. U. Gamm, and L. Reindl. "Performance evaluation and comparative analysis of subcarrier modulation wake-up radio systems for energy-efficient wireless sensor networks." Sensors 14, no. 1 (2013): 22-51. http://www.mdpi.com/1424-8220/14/1/22/htm

T. Umeda and S. Otaka, "ECO chip: Energy Consumption Zeroize Chip with a 953MHz High-Sensitivity Radio Wave Detector for Standby Mode Applications," 2007 IEEE Custom Integrated Circuits Conference, San Jose, CA, 2007, pp. 663-666. http://ieeexplore.ieee.org/stamp/stamp.jsp?tp=&arnumber=4405819&isnumber=4405667

S. Kim et al., "Ambient RF Energy-Harvesting Technologies for Self-Sustainable Standalone Wireless Sensor Platforms," in Proceedings of the IEEE, vol. 102, no. 11, pp. 1649-1666, Nov. 2014. http://ieeexplore.ieee.org/stamp/stamp.jsp?tp=&arnumber=6922609&isnumber=6926880

X. Lu, P. Wang, D. Niyato, D. I. Kim and Z. Han, "Wireless Networks With RF Energy Harvesting: A Contemporary Survey," in IEEE Communications Surveys & Tutorials, vol. 17, no. 2, pp. 757-789, Secondquarter 2015. http://ieeexplore.ieee.org/stamp/stamp.jsp?tp=&arnumber=6951347&isnumber=7110413