UC Irvine
UC Irvine Previously Published Works

Title
Hereditary auditory, vestibular, motor, and sensory neuropathy in a Slovenian Roma (Gypsy) kindred

Permalink
https://escholarship.org/uc/item/8mp4k6gg

Journal
Annals of Neurology, 46(1)

ISSN
0364-5134

Authors
Butinar, Dusan
Zidar, Janez
Leonardis, Lea
et al.

Publication Date
1999-07-01

DOI
10.1002/1531-8249(199907)46:1<36::aid-ana7>3.0.co;2-j

Copyright Information
This work is made available under the terms of a Creative Commons Attribution License, availalbe at https://creativecommons.org/licenses/by/4.0/

Peer reviewed

eScholarship.org Powered by the California Digital Library
University of California

Hereditary Auditory, Vestibular, Motor, and Sensory Neuropathy in a Slovenian Roma (Gypsy) Kindred

Dusan Butinar, MD, PhD,* Janez Zidar, MD, PhD,* Lea Leonardis, MD, MSc,* Mara Popovic, MD, PhD,† Luba Kalaydjieva, MD, PhD,‡ Dora Angelicheva, PhD,‡ Yvonne Sininger, PhD,§ Bronya Keats, PhD,‖ and Arnold Starr, MD¶

Members of a Roma (Gypsy) family with hereditary motor and sensory peripheral neuropathy (HMSN) and concomitant auditory and vestibular cranial neuropathies were identified in Kocevje, Slovenia. The illness begins in childhood with a severe and progressive motor disability and the deafness is delayed until the second decade. There are no symptoms of vestibular dysfunction. The family structure is consistent with an autosomal recessive pattern of inheritance and the genetic locus for the disorder is linked to the same region of chromosome 8q24 as other Roma families with HMSN and deafness from Lom, Bulgaria (HMSN-Lom). The present study shows that the deafness is caused by a neuropathy of the auditory nerve with preserved measures of cochlear outer hair cell function (otoacoustic emissions and cochlear microphonics) but absent neural components of auditory brainstem potentials. The hearing loss affects speech comprehension out of proportion to the pure tone loss. Vestibular testing showed absence of caloric responses. Physiological and neuropathological studies of peripheral nerves were compatible with the nerve disorder contemporaneously affecting Schwann cells and axons resulting in both slowed nerve conduction and axonal loss. Genetic linkage studies suggest a refinement of the 8q24 critical region containing the HMSN-Lom locus that affects peripheral motor and sensory nerves as well as the cranial auditory and vestibular nerves.

Butinar D, Zidar J, Leonardis L, Popovic M, Kalaydjieva L, Angelicheva D, Sininger Y, Keats B, Starr A. Hereditary auditory, vestibular, motor, and sensory neuropathy in a Slovenian Roma (Gypsy) kindred. Ann Neurol 1999;46:36–44

Auditory neuropathy is a disorder of hearing caused by an impairment of auditory nerve function in the presence of intact cochlear outer hair cell function.[1–3] The patients have absent or profoundly abnormal auditory brainstem responses beginning with wave I, the component generated by distal portions of the VIII nerve. They also have preserved cochlear receptor functions represented by microphonic potentials generated by both inner and outer hair cells[4,5] and preserved motility of cochlear outer hair cells resulting in faint sounds, otoacoustic emissions, recorded within the ear canal.[6,7] Patients with auditory neuropathy have elevations of pure tone thresholds that can vary from mild to severe.[1,8] However, auditory perceptions dependent on the processing of temporal cues of acoustic signals are particularly affected with markedly impaired speech perception that is out of proportion to the pure tone loss and impaired localization of sound sources.[1] Several of these patients have an associated hereditary motor and sensory neuropathy (HMSN).[2] Recently, Gypsy families originating from Lom, Bulgaria,[9,10] northern Italy,[11] and a non-Gypsy Bulgarian patient[12] were described with HMSN and deafness. Sural nerve biopsy revealed both a demyelinating disorder and a significant loss of large axons. The hearing loss was described as "sensorineural" in type. The patients had absent auditory brainstem potentials or abnormalities beginning with wave I. No measures of cochlear hair cell function (cochlear microphonic potentials and otoacoustic emissions) were obtained to ascertain if cochlear receptor activities were preserved. The mode of inheritance of the disorder in the Bulgarian and Italian kindred was autosomal recessive and the locus was mapped to the long arm of chromosome 8 (8q24). The disorder has been designated "HMSN-Lom."

We have seen a family of Gypsy extraction in Slo-

From the *Institute of Clinical Neurophysiology, and †Institute of Pathology, University of Ljubljana, Ljubljana, Slovenia; ‡Centre for Human Genetics, Edith Cowan University, Perth, Western Australia, Australia; §House Ear Institute, Los Angeles, and ¶Department of Neurology, University California Irvine, Irvine, CA; and ‖Center for Molecular and Human Genetics, Louisiana State University Medical Center, New Orleans, LA.

Received Dec 10, 1998, and in revised form Feb 3, 1999. Accepted for publication Feb 5, 1999.

Address correspondence to Dr Starr, Department of Neurology, University California Irvine, Irvine, CA 92717.

 Copyright © 1999 by the American Neurological Association

venia with individuals affected by progressive motor and sensory nerve degeneration before the age of 10 years, and a hearing loss developing in their teens, with a mode of inheritance that also appears to be autosomal recessive. The results presented in this study show that the hearing loss is caused by a neuropathy of the auditory nerve and that cochlear outer hair cell receptor functions are preserved. The affected patients also have a concomitant asymptomatic vestibular impairment. We also show that the gene associated with the disorder is located in the same region as the locus for the Bulgarian and Italian families (HMSN-Lom) and we suggest refinement of the interval on chromosome 8q24 that contains the gene. In addition, our analyses indicate that the disorder in this family is most likely genetically identical to HMSN-Lom, described in Bulgarian and Italian Gypsies.

Subjects and Methods

Subjects

The family lives in Kocevje, which is about 60 km from Ljubljana, the capital of Slovenia. We studied 3 living affected individuals (2 males and 1 female) and obtained information from interviews of the elders of the family for members spanning five generations (Fig 1). There appeared to have been 4 affected individuals (2 females and 2 males) who developed difficulties in walking when they were children and who died as children or young adults. The family elders did not have information as to the hearing in these deceased family members. We were unable to ascertain whether these individuals had ever undergone medical examinations. The 3 living affected individuals developed a progressive motor and sensory impairment of the limbs beginning in the first decade of life and a hearing loss manifested in the second decade. The patients did not have symptoms of vestibular dysfunction. The pedigree structure is consistent with an autosomal recessive pattern of inheritance, and no consanguineous marriages were reported.

The Slovenian Ethics Committee approved this study and informed consent was obtained from Patient III-9 who underwent sural nerve biopsy.

Audiometric Testing

Auditory functions were measured by using standard clinical procedures including pure tone audiometry, speech comprehension, tympanometry, middle ear muscle reflexes, otoacoustic emissions to transient stimuli, and distortion products.

Fig 1. Pedigree structure of the Slovenian Gypsy family. Asterisks *indicate members from whom blood samples were drawn.*

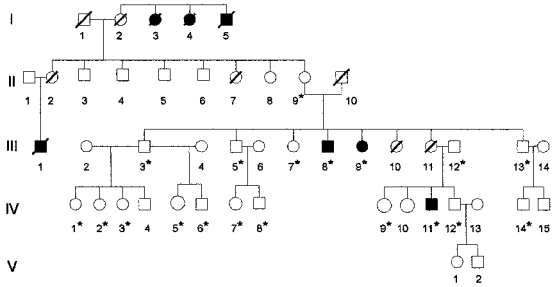

Vestibular Testing

Caloric stimulation with warm and cold water was used to obtain oculovestibular reflexes, while recording extraocular movements.

Neurophysiological Testing

Brainstem auditory evoked potentials were tested by using ipsilateral earlobe to vertex recordings with click stimuli presented from TDH-39P ear phones at both slow (2/sec) and rapid (10/sec) stimulus rates. Condensation and rarefaction click stimuli were tested separately at 100 dB, normalized hearing level (nHL). Averages were made from 2,000 trials.

Visual evoked potentials to alternating checkerboard stimulation were tested to monocular stimulation.

Somatosensory evoked potentials to median nerve stimulation were recorded, and averages to 246 trials were made. Somatosensory evoked potentials were absent in all 3 affected individuals.

Neuropathological Testing

In 1 of the affected patients (a 31-year-old female, Patient III-9) sural nerve biopsy was performed. Specimens were studied by (1) tease separation of individual fibers, (2) stains for nerve growth factor (NGF-rec), and (3) electron microscopy.

Genetic Marker Typing

Blood samples were drawn from 19 family members and DNA was obtained by the ethanol extraction method. A set of eight microsatellite markers (D8S558, D8S378, D8S529, 326CA2, 189CA17, 474CA1, D8S256, and D8S1462) in the 8q24 region was typed in 10 members, spanning three generations, including the 3 living affected individuals. Only the samples from those family members that could provide information for linkage analysis (parents of affected individuals, affected individuals, and their siblings) were genotyped. DNA samples of HMSN-Lom patients from various Gypsy groups, representing typical as well as rare haplotypes, were run in parallel with controls. The genotyping protocol was similar for each marker and primers were obtained from Research Genetics. In brief, the polymerase chain reaction mixture included 40 ng of DNA, 50 ng of each primer, one of which was end-labeled with [α-^{32}P]ATP, 200 M dNTPs, and 1 U of *Taq* polymerase, together with the optimal concentration of magnesium chloride (3–5 mM). The polymerase chain reaction times and temperatures for each of the 35 cycles included denaturation for 20 seconds at 94°C, annealing for 20 seconds at about 55°C, and extension for 20 seconds at 72°C. A 5-minute final extension at 72°C was then performed. Electrophoresis was performed on a 6% denaturing polyacrylamide-sequencing gel for about 2 hours using 1 L of the polymerase chain reaction product. The DNA fragments were visualized by overnight autoradiography. The program LODLINK[13] was used for LOD score calculations.

Results

Neurological Findings

The 3 affected individuals (Patient III-8, age 33 years; Patient III- 9, age 31 years; and Patient IV-11, age 22 years) had muscle atrophy typical of HMSN phenotypes but with the addition of significant hearing loss. The first motor symptoms of the disease appeared at the age of 4, 8, and 5 years, respectively, and hearing loss developed later at 10, 13, and 15 years, respectively. They all had marked difficulties in walking by their late teens. The mental state was normal without signs of cognitive impairments. Facial muscle strength tested by maintained eye closure against resistance was reduced. The patients could hear sounds but could only understand speech by using lip reading. There was marked atrophy of the distal limb muscles, with claw deformities of the hands and equinovarus deformities of the feet. Patient IV-11 had polydactyly in the hands. There was less severe weakness or atrophy of neck or proximal muscles. Deep tendon reflexes were absent in all patients. They were wheelchair bound. Patient IV-11 was able to walk only a few steps independently but with orthopedic foot support, and his gait was very ataxic. Patients III-8 and III-9 had scoliosis. Sensory examination showed distal hypesthesia to touch and pin and absent sense of vibration in the toes and ankles. Patient IV-11 had ulcers of the skin of the feet.

Neurophysiological Findings

The Table contains the results of the tests assessing peripheral nerve (nerve conduction velocity [NCV]), muscle (electromyogram), hearing (audiogram and word comprehension), auditory pathway (otoacoustic emissions, cochlear microphonics, and auditory brainstem potentials), vestibular tests (electronystagmogram [ENG]), and visual and somatosensory evoked potentials for the 3 affected family members.

Motor NCVs tested within 2 years of the onset of their symptoms in the affected individuals were either absent (lower limbs) or markedly slowed (upper limbs), attesting to the rapid course of the neuropathy. Median NCVs in the forearm were less than 20 m/sec and terminal motor latencies in the abductor pollicis brevis were especially prolonged (23 msec). When tested 7 or 8 years later, no muscle contractions of the intrinsic hand muscles could be elicited to median or ulnar nerve stimulation. However, slowed median nerve conduction (7 m/sec) could still be shown in the nerve segment above the elbow in Patient IV-11. Sensory nerve action potentials were absent bilaterally in upper and lower limbs, in 1983, in Patients III-8 and III-9, and in 1987 in Patient IV-11. Electromyography (using needle electrode) of muscles in the arms and legs was performed in 2 of the affected individuals during their first decade and showed signs of denervation. The mother (Patient II-9) of 2 of the affected individuals in Generation III had normal NCVs.

Audiograms tested between 10 and 20 years after the onset of the motor signs showed a pure tone loss without air-bone gap that varied across subjects from mild to profound. The configuration of the audiogram was flat and the loss varied from mild to severe, with 1 of the patients showing an island of mild loss in the 1,500- to 2,000-Hz range in just the right ear. Speech (phonetically balanced words) identification scores were 0% bilaterally in 2 patients (Patients III-8 and III-9), and in Patient IV-11, 20% in the left ear and as high as 70% at 60 dB SL in the right ear. Discrimination with this left ear showed a rapid decrement as the intensity was raised further (20% at 65 dB SL), a phenomenon called "speech intelligibility rollover," which occurs in patients with auditory nerve but not cochlear hearing disorders (Patient IV-11). Tympanograms were normal and acoustic middle ear muscle reflexes were absent. Transient and distortion product otoacoustic emissions were present bilaterally in all. Brainstem auditory evoked potentials did not contain neural components but did show cochlear microphonics in 2 of the patients (Patient III-9 and IV-11). The pure tone audiogram, word comprehension scores, transient evoked otoacoustic emissions, and auditory brainstem potentials from the right ear of the youngest affected family member (Patient IV-11) are shown in Figure 2.

Vestibular testing showed absence of caloric responsiveness in the 3 affected individuals.

Visual evoked potentials were of normal latency in Patients III-8 and IV-11.

Somatosensory evoked potentials were absent in all 3 affected individuals.

Neuropathological Findings

Light microscopy of longitudinal paraffin sections tested with monoclonal antibodies against NGF-rec showed strong expression of NGF-rec on Schwann cells, reflecting the altered relationship between Schwann cells and axons (Fig 3A). Light microscopy of semithin cross sections revealed extreme devastation of myelinated nerve fibers of all types. Only a few myelinated fibers were left and were difficult to detect (see Fig 3B). "Onion bulb" formations were not evident.

Electron microscopic examination revealed that preserved myelinated nerve fibers were surrounded with or in the vicinity of nonmyelinated nerve fibers, creating "pseudo-onion bulb" formations (see Fig 3C). Neither myelinated nerve fiber degeneration nor demyelination was detected. Only rare Schwann cells contained debris of myelin or lipids in their cytoplasm. Nonmyelinated nerve fibers were composed of two to five flattened thin axons surrounded with Schwann cell cytoplasmic processes that were focally reduplicated (see Fig 3C).

Table. Physiological Measures

	Patient III-8 (Born 1965)	Patient III-9 (Born 1967)	Patient IV-11 (Born 1976)
Audiology			
Audiogram	AS 75 dB	AS 105 dB	AS 13 dB
Pure tone average	AD 63 dB	AD 86 dB	AD 35 dB
Reflexes	Absent AS and AD	Absent AS and AD	Absent AS and AD
Speech	AS 0%	AS 0%	AS 20%
% of discrimination	AD 0%	AD 0%	AD 70%
Auditory brainstem	AS absent (1983, 1995)	AS absent	AS
Responses (neural)	AD absent	AD absent	AD absent
Auditory brainstem responses	AS absent	AS 0.3 μV	AS 0.4 μV
Cochlear microphonic	AD absent	AD absent	AD absent
Distortion product	AS 5 dB < 2 kHz	AS 10 dB 0.5–4 kHz	AS 20 dB 0.5–3 kHz
Otoacoustic emissions (DPOAEs)	AD 12 dB 0.5–3 kHz	AD 5 dB 0.5–2 kHz	AD 25 dB 0.5–4 kHz
Sural nerve biopsy		Both axon and myelin affected	
Other tests			
Electronystagmogram	AS absent	AS absent	AS hyporesponsive
Calorics	AD absent	AD absent	AD absent
Visual evoked potentials, P100	OS 106 msec OD 100 msec		OS 104 msec, 7 μV OD 104 msec, 7 μV
Somatosensory evoked potentials	Absent L median	Absent L median	Absent L/R median
	Age 18 (1983)		Age 22 (1998)
Needle electromyography	Arm 3+ fibrillation		Leg 3+ fibrillation

	Age 11 (1976)		Age 9 (1976)		Age 11 (1987)	
Motor nerve conduction	NCV (m/sec)	TL (m/sec)	NCV (m/sec)	TL (m/sec)	NCV (m/sec)	TL (m/sec)
R median	13.5	15.8	16	8.2	0	23.5
R ulnar	9.2	8.5	14.5	6.4	ND	ND
R peroneal	0	0	0	0	0	0
R tibial	0	0	0	0	0	0
	Age 18 (1983)		Age 16 (1983)		Age 19 (1995)	
R median	0	0	0	0	0	0
R ulnar	0	0	0	0	0	0
R median proximally pronator teres	8	22.8	ND	ND	7	14.9
	Age 30 (1995)				Age 22 (1998)	
R median	0	0			0	0
R median proximally, pronator teres	ND	ND			7	23.5
R ulnar	0	0			0	0
R ulnar proximally, flexor carpi ulnaris	ND	ND			5	21.3

AS = left ear; AD = right ear; OS = left eye; OD = right eye; NCV = nerve conduction velocity; TL = terminal latency; ND = not done; 0 = absent; R = right; L = left.

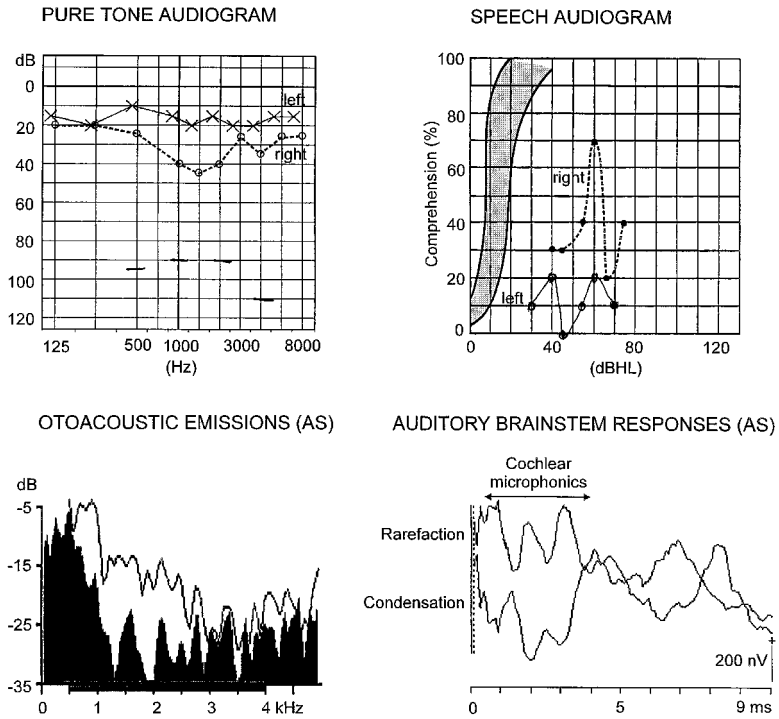

Fig 2. Audiological tests for Patient IV-11 including pure tone thresholds for both ears (top left); word comprehension for both ears with normal range indicated by shaded region (top right); and transient evoked otoacoustic emissions (bottom left) for the left ear showing the amplitude of sound emissions by cochlear outer hair cells in the white region and the background noise in the dark region. The amplitude of the emissions and noise are expressed as decibel peak sound pressure level and the spectral content of the emissions is indicated along the abscissa; auditory brainstem responses (bottom right) from separate stimulation with condensation and rarefaction clicks of the left ear. Neural components are absent and only out-of-phase cochlear microphonics are present.

Pseudo-onion bulb formation with nonmyelinated fiber in the center was observed occasionally (see Fig 3D). There were very few endoneural tubes containing Schwann cells without axons (denervated Schwann cells). Collagen pockets were too numerous, with respect to the age of the patient. The amount of endoneural collagen was prominently increased. Considerable effort was made to obtain a single teased myelinated nerve fiber but, unfortunately, without success.

Genetic Analyses

No recombination was found between the disease locus and any of the eight markers. These markers span a distance of approximately 3 cM,[9] and the most likely order from centRomare (cen) to telomere (qter) is cen-D8S558-D8S529-D8S378-326CA2-189CA17-474CA1-D8S256-D8S1462-qter.[14] Haplotypes were constructed and are shown in Figure 4. The LOD score between the disease locus and the region is 1.53 at a recombination fraction of zero. All of these markers are also tightly linked to the HMSN-Lom locus in the Bulgarian family described by Kalaydjieva and co-workers.[9] Thus, the disease locus is most likely to be the same in the two families. As shown in Figure 4, the 3 affected individuals are homozygous for the three markers in the interval closest to the telomere from 474CA1 to D8S1462, and this haplotype (2-8-3) is identical to the most common HMSN-Lom haplotype in European Gypsies.[9] The affected individual in the fourth generation (Patient IV-11) is also homozygous for the region from D8S558 to 189CA17. However, this latter haplotype (4-6-4-2-3) has not been observed previously among HMSN-Lom or normal Gypsy alleles.[9] The 2 affected individuals in the third generation (Patients III-8 and III-9) are heterozygous in the D8S558-189CA17 region for this 4-6-4-2-3 haplotype and the 6-2-8-4-4 haplotype; the latter is the common HMSN-Lom haplotype. These findings suggest that 189CA17 may be a flanking centromeric marker for the disease gene.

Discussion

We have studied the clinical course, physiological and pathological findings, and genetic locus of a progressive motor and sensory disorder of the limbs in a family of Gypsy extraction in Slovenia that closely resembles a disorder in Bulgarian and Italian Gypsy families (HMSN-Lom) described by Kalaydjieva and co-workers.[9,10] Affected members in these three families have a juvenile onset of motor disability and a delay of about 10 years before the appearance of hearing impairment. A major and early symptom of the hearing disorder shown for the Slovenian family is an impairment of speech perception that is out of proportion to the elevation of pure tone thresholds. The results from the present study show that the hearing loss is caused by a disorder of auditory nerve function in the presence of preserved cochlear outer hair cell functions. The patients have an absence of all neural components of the auditory brainstem potentials beginning with wave I, the component generated by activity of the distal portion of the VIII nerve within the cochlea.[15] Oto-

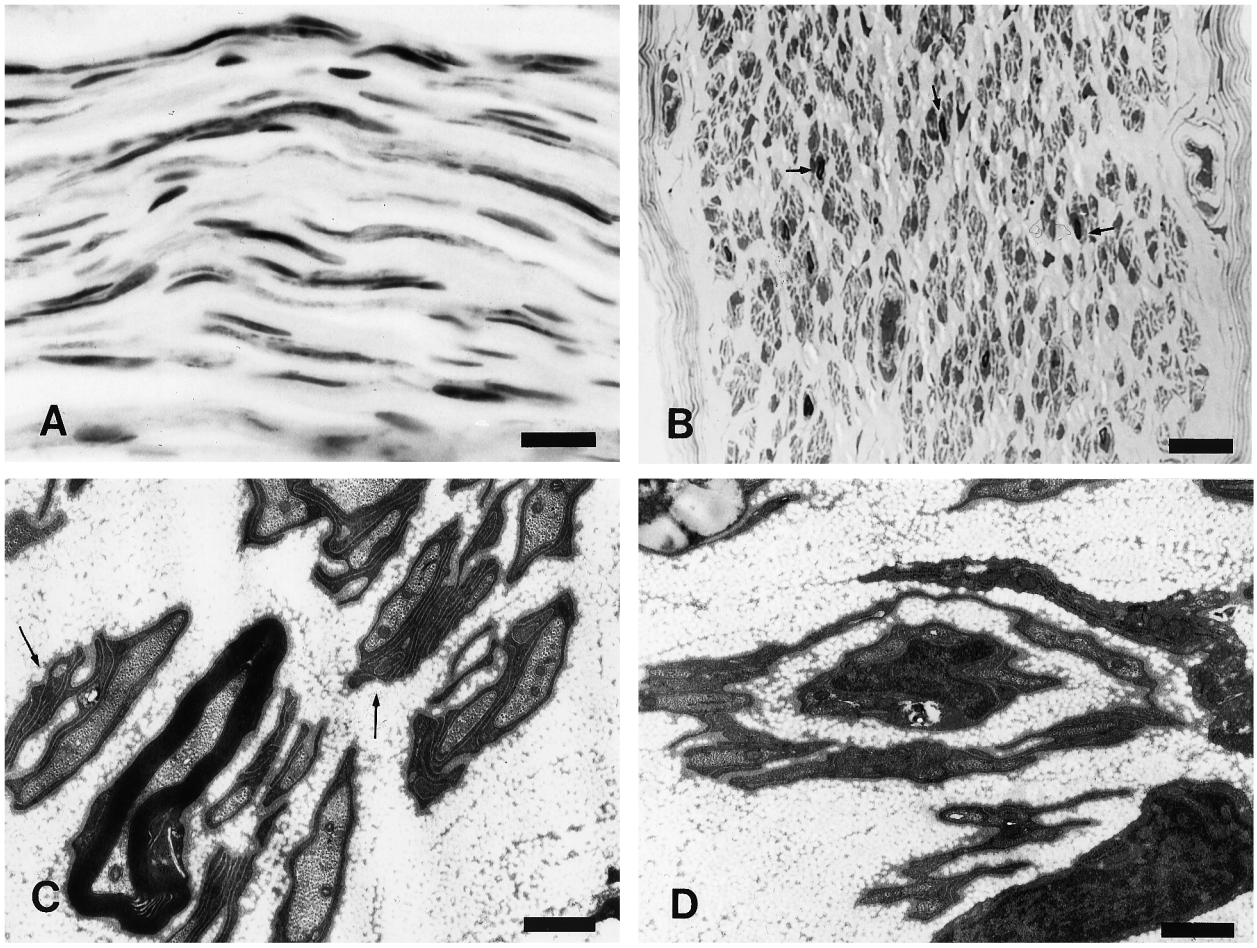

Fig 3. (A) Longitudinal paraffin section of sural nerve from the patient (Patient III-9) reveals numerous Schwann cells labeled with monoclonal antibodies to human nerve growth factor receptor (indirect streptavidin-biotin method). (B) In a semithin section of sural nerve, there are very few, scattered myelinated nerve fibers of small diameter (arrows). *Onion bulb formations are not evident (paraphenylindiamine). Bar = 10 μm (A and B). (C) Electron micrograph showing rare preserved myelinated fibers surrounded with nonmyelinated nerve fibers forming pseudo-onion bulb formation. Focal reduplication of the Schwann cell cytoplasmic processes is obvious* (arrows). *(D) Pseudo-onion bulb formation with nonmyelinated nerve fiber in the center is an ultrastructural feature of this neuropathy. Bar = 1 μm (C and D).*

acoustic emissions, a test that measures faint sounds within the ear canal produced by movements of healthy outer hair cells,[6] were normal, thus providing evidence that cochlear outer hair cell functions were intact. Otoacoustic emissions are lost when outer hair cells are damaged.[7] Two of the 3 patients also had evidence of cochlear microphonic potentials, which are receptor potentials generated by both inner and outer hair cells.[4,5] The 1 patient who did not show cochlear microphonics did have preserved otoacoustic emissions. All of these results suggest that the hearing loss in these patients is neural and not sensorineural in type, as cochlear hair cell functions are preserved but auditory nerve responses are abnormal. Almost all patients with auditory neuropathy from a wide variety of causes have a loss of acoustic brainstem reflexes governing both middle ear muscle contractions[1] and olivocochlear bundle suppression of otoacoustic emissions[3] without changes in middle ear ossicle or tympanic membrane mobility. Thus, the absence of middle ear muscle acoustic reflexes in patients in both this study and the Italian and Bulgarian Roma lineages[9,10] is not a sign of a conductive hearing loss but, rather, evidence of an abnormality of acoustically activated brainstem reflexes.

The finding of an asymptomatic bilateral vestibular disorder in affected patients in the present study may provide a basis for the observation of nystagmus in several of the patients from the Bulgarian lineage,[10] although none of our patients had a disorder of extraocular movements. Our previous observations of abnormal or absent caloric responses in patients with auditory neuropathy caused by various causes[2] led us to

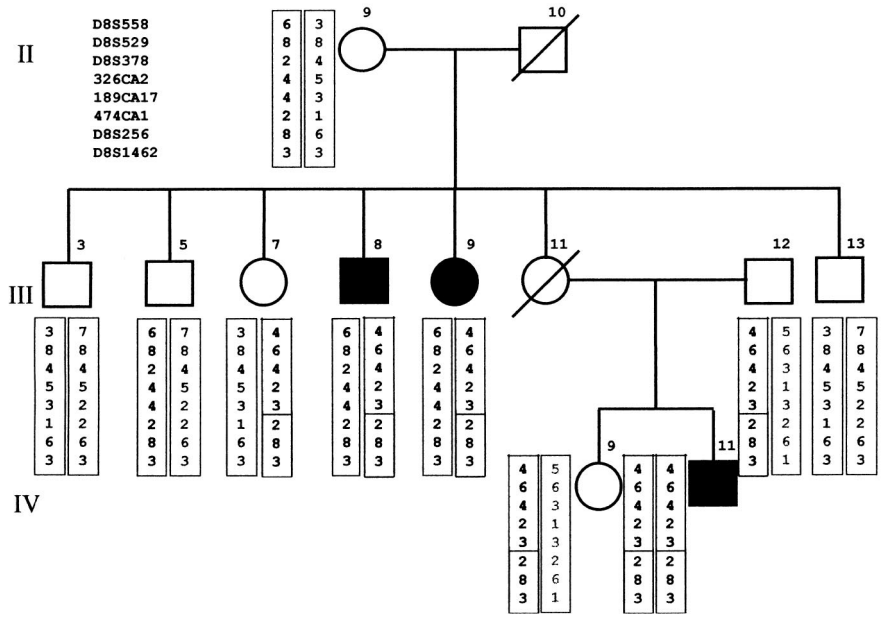

Fig 4. Genotypes for chromosome 8q24 markers in 10 members of the Slovenian Gypsy family. Haplotypes have been deduced from the pedigree structure. Note that the 3 affected members (Patients III-8, III-9, and IV-11) are homozygous for the markers 474CA1, D8S256, and D8S1462.

investigate the caloric vestibulocular reflexes in the affected individuals in this study. The absence of caloric responsiveness described in the present study is most likely the result of a neuropathy of the vestibular portion of the VIII nerve rather than a receptor disorder, in keeping with the basic disease process affecting sensory and motor nerves. Vestibular neuropathies have also been described in patients with HMSN in the past.[16] The absence of symptoms of vestibular disorder in our patients may be the result of the gradual occurrence of a bilateral vestibular disorder, allowing the development of mechanisms that compensate for altered vestibular inputs.

The peripheral nerve abnormalities found in the family of this report are similar to those described in a Gypsy family from Bulgaria[10] and for a non-Gypsy Bulgarian patient.[12] The neuropathy is classified as demyelinating because of the markedly slowed conduction velocities. However, axonal loss is also present early in the disorder as evidenced by (1) early loss of nerve fibers in sural nerve biopsies, (2) clinical evidence of profound muscle atrophy, and (3) reduced amplitude of compound muscle action potentials to maximal electrical stimulation of motor nerve fibers. The sensory loss was profound in the feet with absent appreciation of vibration, position, and pin. One patient had skin ulcers on the feet. The sensory changes were compatible with the sural nerve biopsy findings of loss of all but a few fibers. In "typical" HMSN I, primary demyelination is considered the major pathological process[17,18] with secondary axonal loss noted to be an essential feature of the disorder.[19] The role of demyelination as the primary pathogenic mechanism is unclear, because asymptomatic patients without objective clinical evidence of disease can have marked reductions of motor NCVs.[20] Moreover, studies of adult patients over time show that NCVs can remain essentially unchanged despite deterioration of motor and sensory functions.[18,21,22] It is likely, therefore, that axonal loss is the major contributor to clinical disability in HMSN.[17,18,22]

In the patients with HMSN-Lom, the relative contribution of axonal or myelin pathology to the clinical disorder is not known.[10] Sural nerve biopsies from both the Bulgarian and Slovenian families taken 30 years after the onset of the disorder show that all nerve fibers (axons and myelin) are lost. However, early in the course of the illness, onion bulbs and hypertrophic changes can be found[10] that then apparently "disappear" at later stages of the disease. The loss of onion bulbs at later stages of the disease has also been described in HMSN IA patients with severe axonal loss.[23] In the patients presented in this study, we found clinical, neurophysiological, and neuropathological evidence of demyelination, severe axonal loss, and an altered relationship between the Schwann cells and axons. We did not find onion bulb formations, and other authors have proposed that primary demyelination can be accompanied by secondary axonal loss without typical accompanying onion bulb formation.[24,25] We suggest that in affected members of these kindred, the pathological disorder affects both the axon and the myelin sheath contemporaneously quite early in the disease, with evidence in the first decade of life of both nerve conduction slowing (demyelination) and limb muscle atrophy (axonal loss). Demyelination in patients with HMSN IA is uniform throughout the axonal length[27] and is not believed to block conduction

or show significant desynchronization of transmission in peripheral nerve.[28]

However, for auditory processes even a slight degree of temporal desynchronization accompanying demyelination, either primary or secondary to axonal disease of the VIII nerve, would likely have significant adverse effects on auditory function. The auditory system is especially adapted for encoding temporal features in the microsecond range of environmental acoustic signals. Patients with auditory neuropathy are particularly impaired on tasks testing temporal resolving capacities such as sound localization, word comprehension, and detection of small gaps in steady sound.[1] Impaired temporal synchrony of auditory nerve fibers is also likely to be responsible for the failure to detect averaged auditory brainstem potentials to acoustic signals that are clearly perceptible. We have modeled the effects of introducing a slight temporal jitter in the averaging process (<1 msec) for auditory brainstem potentials in healthy subjects and shown a marked attenuation of averaged auditory brainstem potentials beginning with wave I.[1]

The expression of the pathological process in auditory/vestibular nerves in these patients may be related to specific anatomical features of these nerves compared with other cranial and peripheral nerves.[29] The portion of the auditory/vestibular nerve that is distal to the arachnoid is myelinated by Schwann cells and the central portions are myelinated by oliogodendroglia. Auditory nerve fibers in humans are relatively homogeneous, averaging 6 μm (range, 3–11 μm), and vestibular nerves are slightly larger (mean diameter, 9 μm; range, 3–15 μm). Morphometric analyses of sural nerves from affected young individuals revealed a loss of myelinated fibers greater than 5 μm[10] and a loss of all nerve fibers at later stages of the illness. Symptoms of auditory nerve involvement occurred about 10 years after the limbs were first affected, perhaps reflecting the predominantly small-fiber composition (<5 μm) of the auditory nerve.

HMSN neuropathies are a heterogeneous group of disorders, with various cranial and even autonomic nerves being affected along with the peripheral disorder. These disorders involve optic nerves,[30] phrenic and vagal nerves,[31] facial and vestibular nerves,[16] trigeminal nerve,[32] and auditory nerve.[33–35] Other sensory nerve involvement (olfaction and taste) has not been specifically commented on. The results of the genetic analysis for the Slovenian family combined with the results for the Bulgarian and Italian families[9,11] suggest that the region of chromosome 8 containing the disease locus can be refined to the interval between 189CA17 and D8S256. This interpretation is based on the assumption that a recombination event between 189CA17 and 474CA1 created the two different haplotypes in the affected individuals, Patients III-8 and III-9 (6-8-2-4-4-2-8-3 and 4-6-4-2-3-2-8-3; see Fig 4). It was surprising to find that the third affected individual, Patient IV-11, is homozygous for a haplotype (4-6-4-2-3-2-8-3; see Fig 4) that has not been observed in affected Bulgarian Gypsies, because the fathers (Patients II-10 and III-12) of the 3 affected individuals are not known to be related. We will genotype additional DNA samples from the Slovenian Gypsy population, to determine the relative frequencies of the two haplotypes associated with the disease allele and to determine their origin relative to the separation of the Slovenian and Bulgarian gypsies, which took place in the 18th century.[36]

This study provides a detailed characterization of HMSN in affected members of a Slovenian Gypsy family and suggests that the disease locus is the same as in a Bulgarian Gypsy family. In addition, results suggest that the critical region containing the HMSN-Lom locus can be refined. A BAC contig of this region is being completed,[14] to assist in the isolation of the gene that is defective in individuals with hereditary auditory, vestibular, motor and sensory neuropathy.

This study was supported by National Institutes of Health grant NIDCD DC02618-01A2 (A.S.), the Muscular Dystrophy Association (L.K. and B.K.), the Slovenian Ministry of Science and Technology (D.B.), and the Australian National Health and Medical Research Council (L.K.).

We acknowledge and thank Dr Jagoda Vatovec from the Clinic for Otorhinolaryngology and Cervicofacial Surgery, University Medical Center, Ljubljana, who performed the auditory function tests, Ignac Zidar-Nacek from Institute of Clinical Neurophysiology who made many of the illustrations, and Zhining Den from the Center for Molecular and Human Genetics, Louisiana State University Medical Center, who performed DNA analyses.

References

1. Starr A, McPherson D, Patterson J, et al. Absence of both auditory evoked potentials and auditory percepts dependent on timing cues. Brain 1991;114:1157–1180
2. Starr A, Picton TW, Sininger Y, et al. Auditory neuropathy. Brain 1996;119:741–753
3. Berlin CI, Hood LJ, Cecola RP, et al. Does type I afferent dysfunction reveal itself through lack of efferent suppression? Hear Res 1993;65:40–50
4. Dallos P. Cochlear potentials: a status report. Audiology 1972; 11:29–41
5. Aran JM, Charlet de Sauvage R. Clinical value of cochlear microphonic recordings. In: Ruben RJ, Elberling C, Salomon G, ed. Electrocochleography. Baltimore: University Park Press, 1976:55–65
6. Kemp DT. Evidence of mechanical nonlinearity and frequency selective wave amplification in the cochlea. Arch Otorhinolaryngol 1979;224:37–45
7. Kemp DT, Ryen S, Bray P. A guide to the effective use of otoacoustic emissions. Ear Hear 1990;11:93–105
8. Prieve BA, Gorga MP, Neely ST. Otoacoustic emissions in an adult with severe hearing loss. J Speech Hear Res 1991;34:379–385
9. Kalaydjieva L, Hallmayer J, Chandler D, et al. Gene mapping

in Gypsies identifies a novel demyelinating neuropathy on chromosome 8q24. Nat Genet 1996;14:214–217
10. Kalaydjieva L, Nikolova A, Turnev I, et al. Hereditary motor and sensory neuropathy-Lom, a novel demyelinating neuropathy associated with deafness in gypsies: clinical, electrophysiological and nerve biopsy findings. Brain 1998;121:399–408
11. Merlini L, Villanova M, Sabatelli P, et al. Hereditary motor and sensory neuropathy Lom type in an Italian Gypsy family. Neuromuscul Disord 1998;8:182–185
12. Baethmann M, Gohlich-Ratmann G, Schroder JM, et al. HMSN-LOM in a 13-year-old Bulgarian girl. Neuromuscul Disord 1998;8:90–94
13. SAGE. Statistical Analysis for Genetic Epidemiology, Release 2.2. Cleveland: Department of Epidemiology and Biostatistics, Case Western Reserve University, 1994
14. De Jonge RR, Dye D, Yanakiev P, et al. Mapping a BAC contig and physical map covering chromosome 8q24, looking for a HMSN-Lom gene. Am J Hum Genet 1998;63:A248
15. Moller AR. Neural generators of auditory evoked potentials. In: Jacobson JT, ed. Principles and applications in auditory evoked potentials. Boston: Allyn & Bacon, 1994:23–46
16. Ionasescu VV, Searby C, Greenberg SA. Dejerine-Sottas disease with sensorineural hearing loss, nystagmus, and peripheral facial nerve weakness: de novo dominant point mutation of the PMP22 gene. J Med Genet 1996;33:1048–1049
17. Dyck PJ, Karnes JL, Lambert EH. Longitudinal study of neuropathic deficits and nerve conduction abnormalities in hereditary motor and sensory neuropathy type 1. Neurology 1989; 39:1302–1308
18. Roy EP, Gutmann L, Riggs JE. Longitudinal conduction studies in hereditary motor and sensory neuropathy type 1. Muscle Nerve 1989;12:52–55
19. Dyck PJ, Chance P, Lebo R, Carney JA. Hereditary motor and sensory neuropathies. In: Dyck PJ, Thomas PK, eds. Peripheral neuropathy. Philadelphia: WB Saunders, 1993:1096–1114
20. Meier C, Tackmann W. Die hereditaren motorisch-sensiblen Neuropathien. Fortschr Neurol Psychiatr 1982;50:349–365
21. Gutmann L, Fakadej A, Riggs JE. Evolution of nerve conduction abnormalities in children with dominant hypertrophic neuropathy of the Charcot-Marie-Tooth type. Muscle Nerve 1983; 6:515–519
22. Killian JM, Tiwari PS, Jacobson S, et al. Longitudinal studies of the duplication from Charcot-Marie-Tooth polyneuropathy. Muscle Nerve 1996;19:74–78
23. Thomas PK, Marques W Jr, Davis MB, et al. The phenotypic manifestation of chromosome 17p11.2 duplication. Brain 1997; 120:465–478
24. Nukada H, Dyck PJ. Decreased axon caliber and neurofilaments in hereditary motor and sensory neuropathy type I. Ann Neurol 1984;16:238–241
25. Gabreels-Festen AA, Joosten EM, Gabreels FJ, et al. Early morphological features in dominantly inherited demyelinating motor and sensory neuropathy (HMSN type I). J Neurol Sci 1992; 107:145–154
26. Watson DF, Nachtman FN, Wallace MR, et al. Dinucleotide repeat polymorphism at the D17S250 and D17S261 loci. Nucleic Acids Res 1990;18:4640
27. Kaku DA, Parry GJ, Malamut R, et al. Uniform slowing of conduction velocities in Charcot-Marie-Tooth polyneuropathy type 1. Neurology 1993;43:2664–2667
28. Lewis RA, Sumner AJ. Electrodiagnostic distinction between chronic familial and acquired demyelinative neuropathies. Neurology 1982;32:592–596
29. Natout MAY, Terr LI, Linthicum FH, House WF. Topography of vestibulocochlear nerve fibers in the posterior cranial fossa. Laryngoscope 1987;97:954–958
30. Chalmers RM, Riordan EP, Wood NW. Autosomal recessive inheritance of hereditary motor and sensory neuropathy with optic atrophy. J Neurol Neurosurg Psychiatry 1997;62:385–387
31. Dyck JP, Litchy WJ, Minnerath S, et al. Hereditary motor and sensory neuropathy with diaphragm and vocal cord paresis. Ann Neurol 1994;35:608–615
32. Cruse RP, Conomy JP, Wilbourn AJ, Hanson MR. Hereditary hypertrophic neuropathy combining features of tic douloureaux, Charcot-Marie-Tooth disease, and deafness. Cleve Clin Q 1977;44:107–111
33. Harding AE, Thomas PK. Autosomal recessive forms of hereditary motor and sensory neuropathy. J Neurol Neurosurg Psychiatry 1980;43:669–678
34. Quattrone A, Gambardella A, Bono F, et al. Autosomal recessive hereditary motor and sensory neuropathy with focal folded myelin sheaths: clinical, electrophysiologic, and genetic aspects of a large family. Neurology 1996;46:1318–1324
35. Priest JM, Fischbeck KH, Nouri N, Keats BJ. A locus of axonal motor-sensory neuropathy with deafness and mental retardation maps to Xq24–q26. Genomics 1995;29:409–412
36. Komac-Virant L. Gypsies in Kocevje. Ljubljana, Slovenia: University of Ljubljana, 1994:1–79