Title
Summary of the Research Progress Meeting of September 15, 1949

Author
Kramer, H.P.

Publication Date
1949-10-19

UCRL 479
Copy 85

UNIVERSITY OF CALIFORNIA

Radiation Laboratory

BERKELEY, CALIFORNIA

DISCLAIMER

UNIVERSITY OF CALIFORNIA
Radiation Laboratory

Cover Sheet
Do not remove

INDEX NO. UCRL 470
This document contains 17 pages
This is copy 85 of 94 Series A

DECLASSIFIED

Issued to INFORMATION DIVISION

~~CONFIDENTIAL~~
Classification

Each person who receives this document must sign the cover sheet in the space below

Route to	Noted by	Date	Route to	Noted by	Date
	SGV				

UNIVERSITY OF CALIFORNIA

Radiation Laboratory

Contract No. W-7405-eng-48

SUMMARY OF THE RESEARCH PROGRESS MEETING

OF SEPTEMBER 15, 1949

H. P. Kramer

October 19, 1949

Berkeley, California

Standard Distribution	Copy Numbers
Argonne National Laboratory	1-12
Armed Forces Special Weapons Project	13
Atomic Energy Commission, Washington	14-15
Battelle Memorial Institute	16
Brookhaven National Laboratory	17-20
Bureau of Ships	21
Carbide and Carbon Chemicals Corporation (K-25)	22-25
Carbide and Carbon Chemicals Corporation (Y-12)	26-29
Columbia University (Dunning)	30
General Electric Company, Richland	31-34
Hanford Operations Office	35
Idaho Operations Office	36-37
Iowa State College	38
Knolls Atomic Power Laboratory	39-42
Los Alamos	43-45
Mallinckrodt Chemical Works	46
Mound Laboratory	47-49
National Advisory Committee for Aeronautics	50
National Bureau of Standards	51
Naval Radiological Defense Laboratory	52
NEPA Project	53
New Brunswick Laboratory	54
New York Operations Office	55-56
North American Aviation, Inc.	57
Oak Ridge National Laboratory	58-65
Patent Branch, Washington	66
Sandia Laboratory	67
Technical Information Branch, ORE	68-82
UCLA Medical Research Laboratory (Warren)	83
University of California Radiation Laboratory	84-88
University of Rochester	89-90
Westinghouse Electric Corporation	91-94
	94

Information Division
Radiation Laboratory
Univ. of California
Berkeley, California

SUMMARY OF THE RESEARCH PROGRESS MEETING

OF SEPTEMBER 15, 1949

H. P. Kramer

October 19, 1949

Cross Section for π^+ and π^- Meson Production by Protons. H. Wilcox.

The speaker and C. Richman some time ago undertook to measure the cross section for π^+ and π^- meson production in carbon by 350 Mev protons in the external deflected beam of the 184-inch cyclotron. Since preliminary work in connection with this experiment was reported at the Research Progress Meeting of May 12, 1949 (UCRL 378) the design has undergone some changes.

The present apparatus is sketched schematically in Fig. 1. The proton beam is collimated to a diameter of one inch. It passes through a carbon target inclined at 45° to the direction of the beam and is then collected in a current integrator. Mesons that are produced in the carbon target and which leave at angles in the neighborhood of 90° with the direction of motion of the protons enter a laminated copper block with a top layer of aluminum. Each stratum of the block has a photographic plate embedded in it which records only mesons that are emitted from the target with an energy exceeding a certain minimum. This arrangement permits the measurement in one run of the cross section for both positive and negative meson production not only absolutely but also as a function of energy.

π^+ mesons were identified by the fact that they decay into μ^+ mesons. For this reason it was very important to be able to recognize the track of a μ^+ meson in connection with a π^+ track. The plates which were found to give the most clearly identifiable $\pi^+ - \mu^+$ decay tracks were spread with Ilford C-3 emulsion to a thickness of 100 microns.

The number of π^- tracks was deduced from the number of stars which were observed by making use of the customary conversion factor of 1.37. That is, the number of π^- mesons was taken to be equal to 1.37 times the number of stars. Tracks which ended abruptly in the emulsion were regarded as μ^+ tracks. Ten percent of the count was discarded in each plate because the tracks seemed to end so close to the surface of the emulsion that if a π^+ meson had decayed into a μ^+ meson this decay could not be identified with certainty since the μ^+ meson might have left the emulsion.

Losses in the count because of scattering of mesons were not taken into account since it was thought that such losses would be negligible for the geometry employed.

The following expression was derived to express the differential cross section of the mesons:

$$\frac{d\sigma}{dE\,d\Omega} = \frac{N_o \cos \alpha}{\left(\frac{R_{abs}}{R_{em}}\right) \ell\, t_{em}} \cdot \left(\frac{A}{L(\rho t)}\right)_{target} \cdot \left(\frac{1}{\frac{Q_{beam}}{e}}\right) \cdot \left(\frac{1}{\Delta E \frac{1}{R^2_{eff}}}\right)$$

Here L is Avogadro's number, ℓ is the lateral dimension which was scanned, t_{em} is the normal thickness of the emulsion and t_{targ} is the thickness of the carbon target, R_{abs} is the range in absorber and R_{em}, the range in the emulsion. N_o is the count of mesons in a certain region of the plate. Q represents the beam current.

This formula does not account for the mesons which might have decayed in flight nor for those which might have taken part in a nuclear reaction.

Since the plates which were used vary in thickness from 80 to 120 microns and since, furthermore, photographic development changes the thickness, the measurement of the number t_{em} presented somewhat of a problem. This difficulty was overcome by passing a narrowly collimated alpha-particle beam at a known

angle through each plate before using it as a meson detecter. After exposure to mesons and subsequent development the lateral projection p of the alpha particle track was measured (see Fig. 2). This measurement together with the known angle of entrance of the α-particles determines the thickness of the emulsion. The shrinkage factor for an emulsion upon development was found to be 1.96.

The cross section for the production of mesons leaving a carbon target at 90° as a function of energy is presented in the plot of Fig. 3.

A run was made with a Pb target in place of the carbon target. The maximum cross section increased by a factor of 10 over that for carbon. The curve also seems to be steeper.

The ratio π^+/π^- was determined to be about 5.5 ± 2 for carbon. H. Bradner has found the value 5.0 ± 0.5 for this ratio through an experiment within the vacuum tank of the cyclotron.

Calculated Meson Production Compared with Observed Data. T. Taylor.

Fig. 4 demonstrates the agreement between the observed cross section for the production of π^+ mesons and the calculated cross section. In the calculations, the value of the coupling constant was taken to be $g^2 = .3$.

Relative Neutron Yields from Targets Bombarded with Protons and Deuterons. W. Knox.

Shortly after the initial operation of the 184-inch cyclotron it was observed that a beam of 190 Mev deuterons when it passed through a target produces a beam of neutrons in the same direction as that of the deuterons. The explanation which was offered for this phenomenon is that in passing close to a nucleus, a deuteron loses its proton to the nucleus whereas the neutron continues in the original direction of motion. After the 184-inch cyclotron was converted to the acceleration of both protons and deuterons, a beam of neutrons was found to arise also from the reaction of 350 Mev protons with various targets. The object of the present research is to determine the relative yield of neutrons for various targets

exposed to accelerated protons and deuterons in the tank of the 184-inch cyclotron.

In order to perform measurements the apparatus which is sketched schematically in Fig. 5 was set up. To collimate the circulating beam in the cyclotron a beam clipper was set up which eliminates all particles whose vertical oscillations have amplitudes which exceed the aperture of the beam clipper. At 155° from the beam clipper, the accelerated particles impinge on a target where they produce neutrons. The beam of neutrons is collimated before it leaves the vacuum tank. Outside the shielding, in the line of the beam, a pair of bismuth fission chambers are set up to count the neutron flux.

To assure the measurement of yields from different targets under nearly identical cyclotron conditions, four targets were placed in the cyclotron simultaneously. Each target was attached to the extremity of one arm of a cross which could be rotated through 90° within a time interval of one-half second. The rotating cross is shown in Fig. 6. It is actuated by a coil which is suspended from the target rotater shaft and has its axis perpendicular to the direction of the magnetic field in the cyclotron. It is equipped with a spring loaded catch which presses against an appropriately shaped groove in one of the rotating arms. When power is supplied to the coil it lines up with the magnetic field of the cyclotron and by its motion rotates the cross through 90°. When the axis of the coil is in a vertical position and the power is shut-off, gravity causes it to fall back to its initial position where it engages the next arm of the cross.

The proton and deuteron beams traversing the target within the vacuum tank were monitored by means of thin uniform foils of graphite mounted on both sides of the target material. The integrated flux was measured by determining the decay curves of the C^{11} activity induced in the monitor. The assumption was made that the C^{11} activity produced was proportional to the flux which had passed through the target.

Fig. 7 shows the neutron yield relative to carbon in the forward direction

plotted against $(A - Z)^{2/3}$ obtained from the bombardment with 350 Mev protons. Fig. 8 shows the relative neutron yield from deuteron bombardment plotted against $A^{1/3}$, in comparison with the yield predicted by stripping theory.

Details of this work will be found in "Relative High Energy Neutron Yields from Targets Bombarded with Protons and Deuterons," William J. Knox, UCRL 440.

Recent Studies on Cb and Sm Metabolism Employing Different Complexing Agents.

H. Forman.

Studies on the metabolism of fission products have continued for some time. The motivation of this investigation has been to obtain knowledge of the ultimate distribution of fission products that enter the body for use in cancer studies, decontamination, and general biologic correlations of the factors that affect distribution.

According to present knowledge, most fission products are foreign to the body. Nonetheless, when they are injected into the body they are distributed by the usual channels and in some cases deposited in well defined localities.

Sooner or later after an element contained in solution has been introduced into the body, it finds its way into the blood stream, is distributed among the various components of the blood by laws of chemical equilibrium, and is then washed into all portions of the body. When the element in its course through the blood vessels comes to a place where it forms an insoluble compound, it precipitates out and accumulates.

To test the dependence of the ultimate distribution of elements in the body on the complexing agent which introduces them into the body, various complexing agents were tried. The complexing agents that were used were serum, ascorbic acid, malonic acid, citric acid, and picolinic acid. These were passed over glass dishes plated and baked with columbium and samarium. All of the aforementioned agents removed as much as 98 percent of the Cb on the plates. Agents which did not work as

well as this removed considerably less, about 70 percent, of the Cb. None of the compounds that were tried fell into an intermediate class with regard to complexing efficacy. The complexing agents containing Cb were introduced into rats which were analyzed after about a day to determine where and in what amounts the Cb had deposited. Table I shows the results of these experiments.

With serum one notes an extraordinarily large deposition in the lungs. One possible explanation for this stems from the way in which the serum was obtained. A fibrin clot was removed from a rat's blood and passed over a Cb-plated dish. It is possible that some of the fibrin remained in the serum, found its way to the lungs, and stuck there. At the time of the experiment account was unfortunately not taken of the serum sickness in the rat which is localized in the lungs. This serum sickness is probably intimately related to the anomalous uptake in the lungs.

Complexing with malonic acid has the effect of minimizing accumulation of Cb in organs and causing it to be passed out in the urine. By taking advantage of the different distribution characteristics of the various complexing agents, it may be possible eventually to localize elements in the body almost at will.

Complexed columbium was also injected in rats having artificially produced tumors. The uptake of Cb in the tumors was high.

The results of the present work are still tentative. They will be tested by projected future research.

Information Division
scb/10-19-49

TABLE I

Percent of original dose/gm. of tissue

Tissue	Serum	Ascorbic acid i.v.	Malonic acid i.v.	Citric acid i.v.	Picolinic acid i.m.
Lungs	14.4	.76	.42	.97	.49
Spleen	.44	.78	.41	1.19	.64
Blood	.56	.95	.44	1.08	.42
Liver	1.88	.95	.23	.70	.36
Kidney	.27	.80	.50	1.06	.79
Pancreas		.36	.21	.14	1.04
Skeleton		.60	.44	.47	.65
Muscle		.13	.27	.33	.13
Urine		18.9	20.80	7.27	18.20
Feces		8.56	.32	5.24	17.80

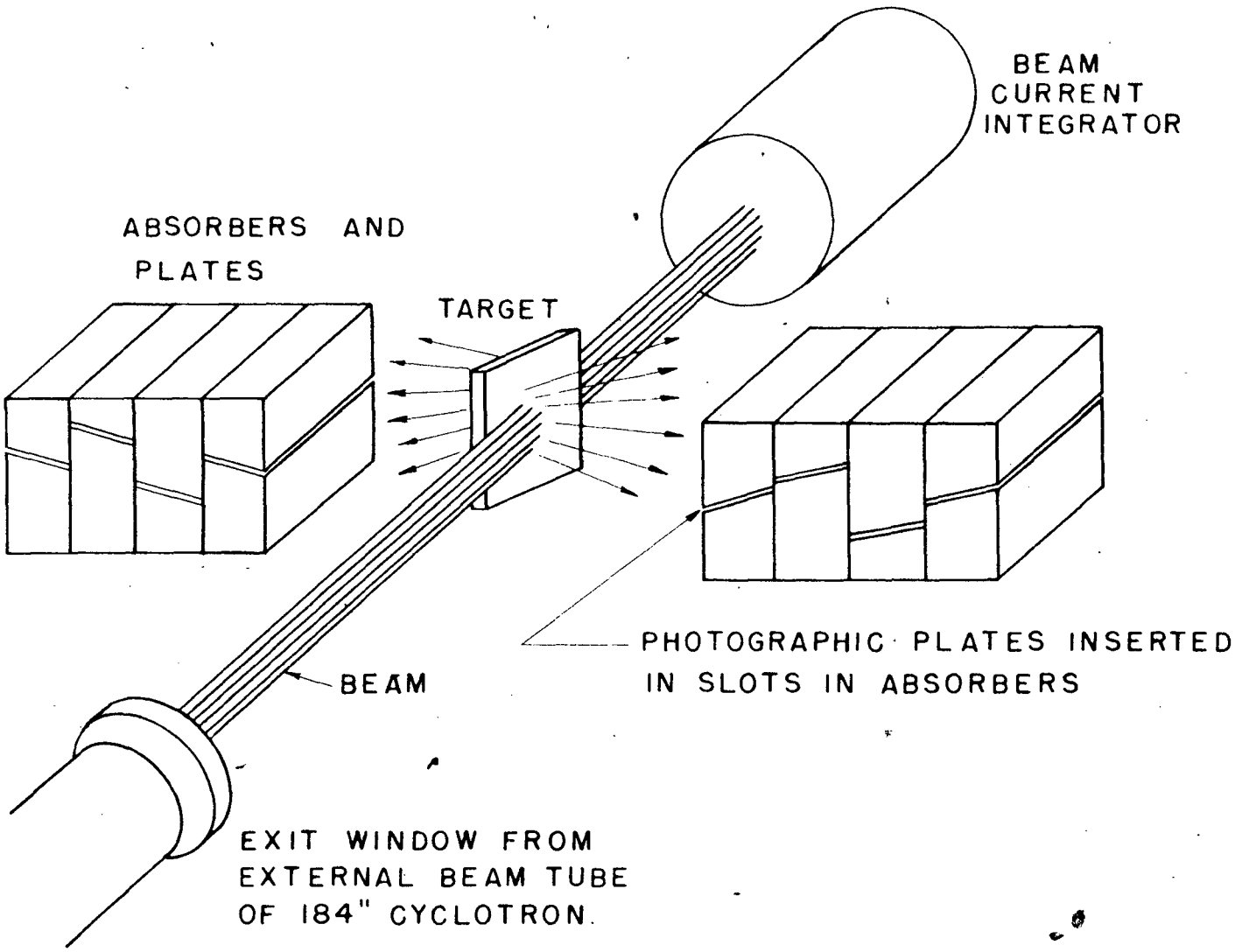
BEAM
CURRENT
INTEGRATOR
ABSORBERS AND
PLATES
TARGET
PHOTOGRAPHIC PLATES INSERTED
IN SLOTS IN ABSORBERS
BEAM
EXIT WINDOW FROM
EXTERNAL BEAM TUBE
OF 184" CYCLOTRON.

FIG. 1

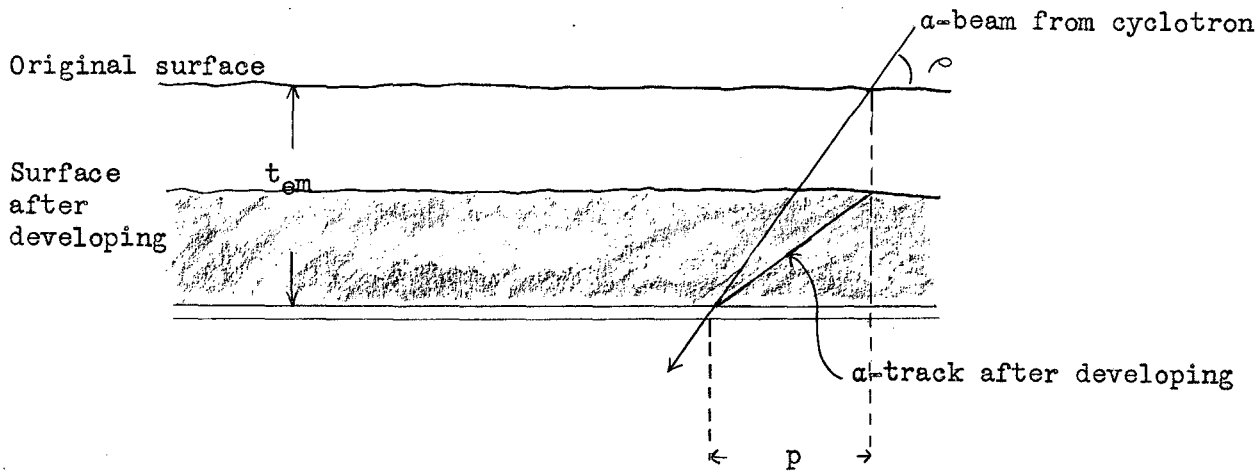

Method for the Measurement of the Thickness of the Emulsion, t_{em}.

Fig. 2

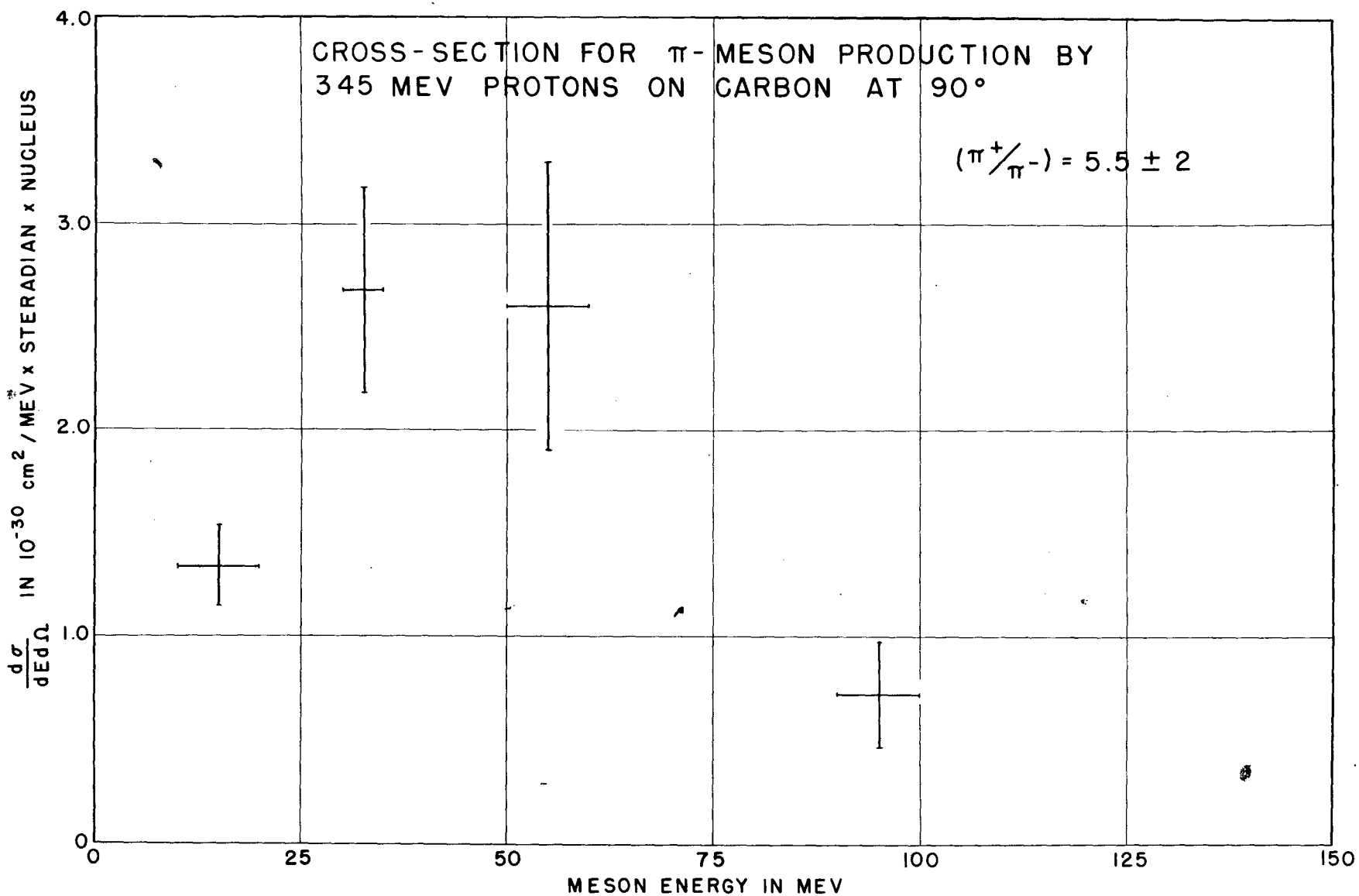
CROSS-SECTION FOR π- MESON PRODUCTION BY
345 MEV PROTONS ON CARBON AT 90°
(π+/π-) = 5.5 ± 2
dσ/dEdΩ IN 10^-30 cm^2 / MEV x STERADIAN x NUCLEUS
MESON ENERGY IN MEV
0
1.0
2.0
3.0
4.0
0
25
50
75
100
125
150

FIG. 3

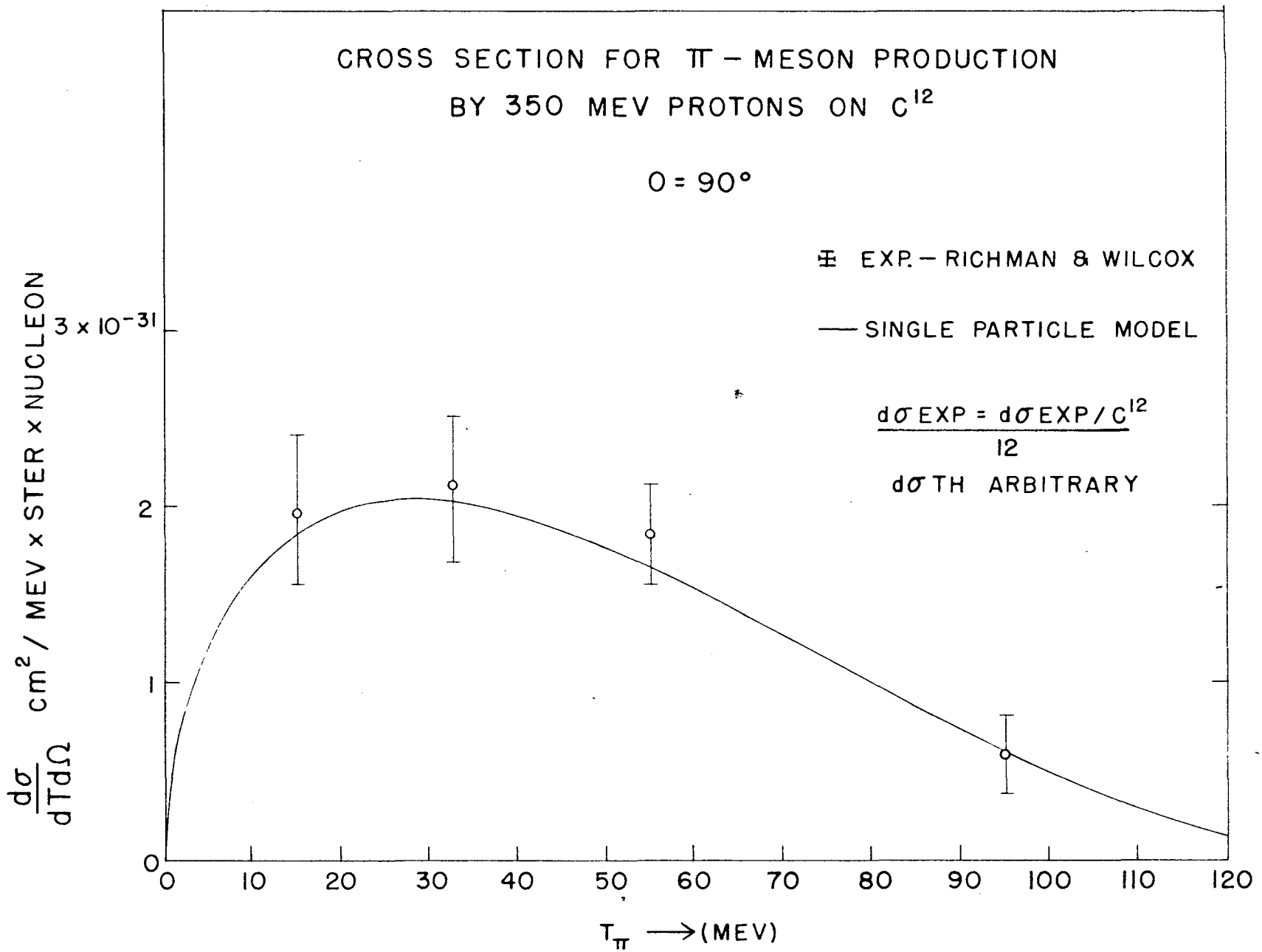
CROSS SECTION FOR π − MESON PRODUCTION
BY 350 MEV PROTONS ON C12
θ = 90°
EXP. − RICHMAN & WILCOX
SINGLE PARTICLE MODEL
dσ EXP = dσ EXP / C12 / 12
dσ TH ARBITRARY
dσ/dTdΩ cm2 / MEV × STER × NUCLEON
3 × 10−31
2
1
0
0 10 20 30 40 50 60 70 80 90 100 110 120
Tπ ⟶ (MEV)

FIG. 4

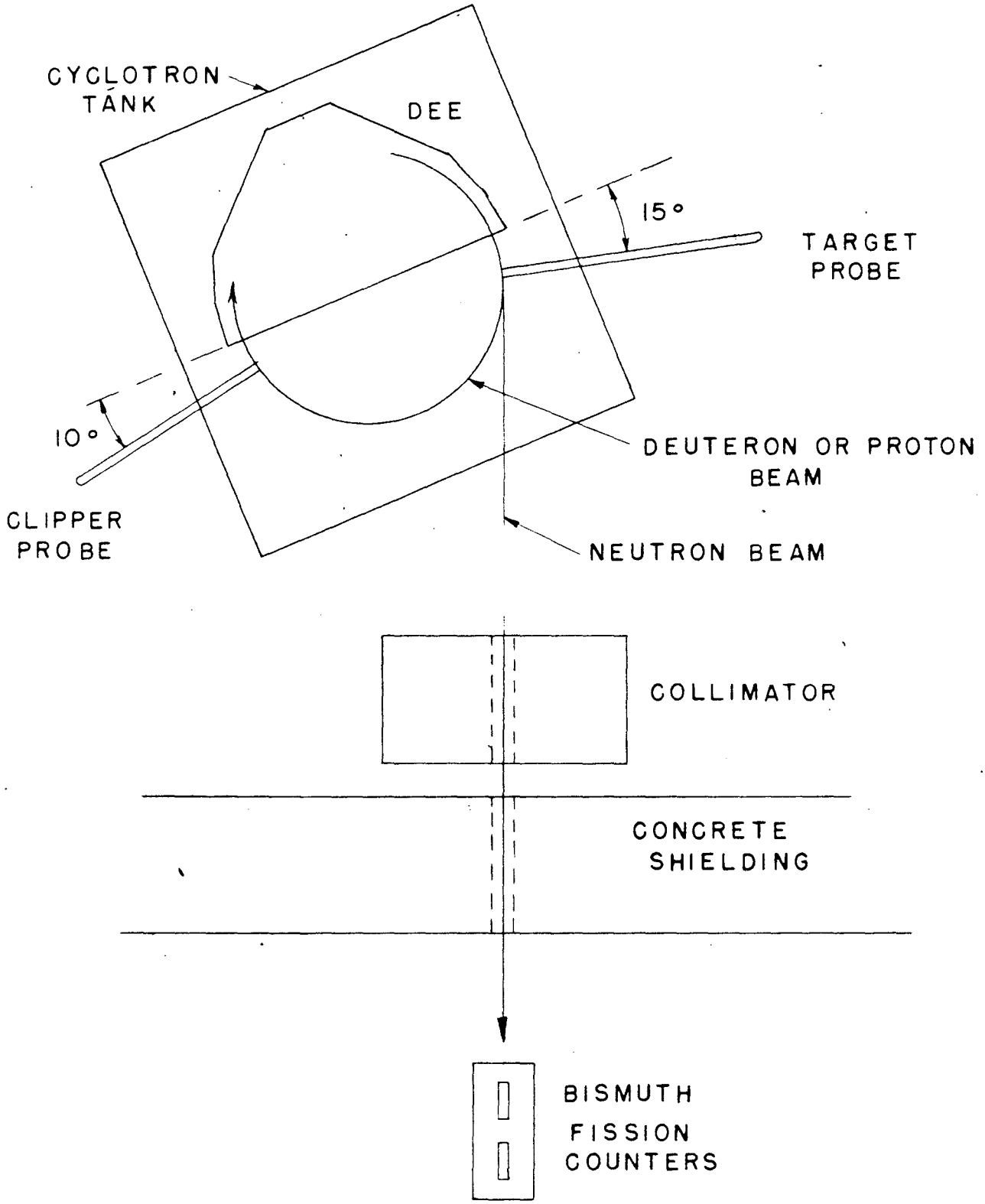
CYCLOTRON TANK
DEE
15°
TARGET PROBE
10°
DEUTERON OR PROTON BEAM
CLIPPER PROBE
NEUTRON BEAM
COLLIMATOR
CONCRETE SHIELDING
BISMUTH FISSION COUNTERS

FIG. 5

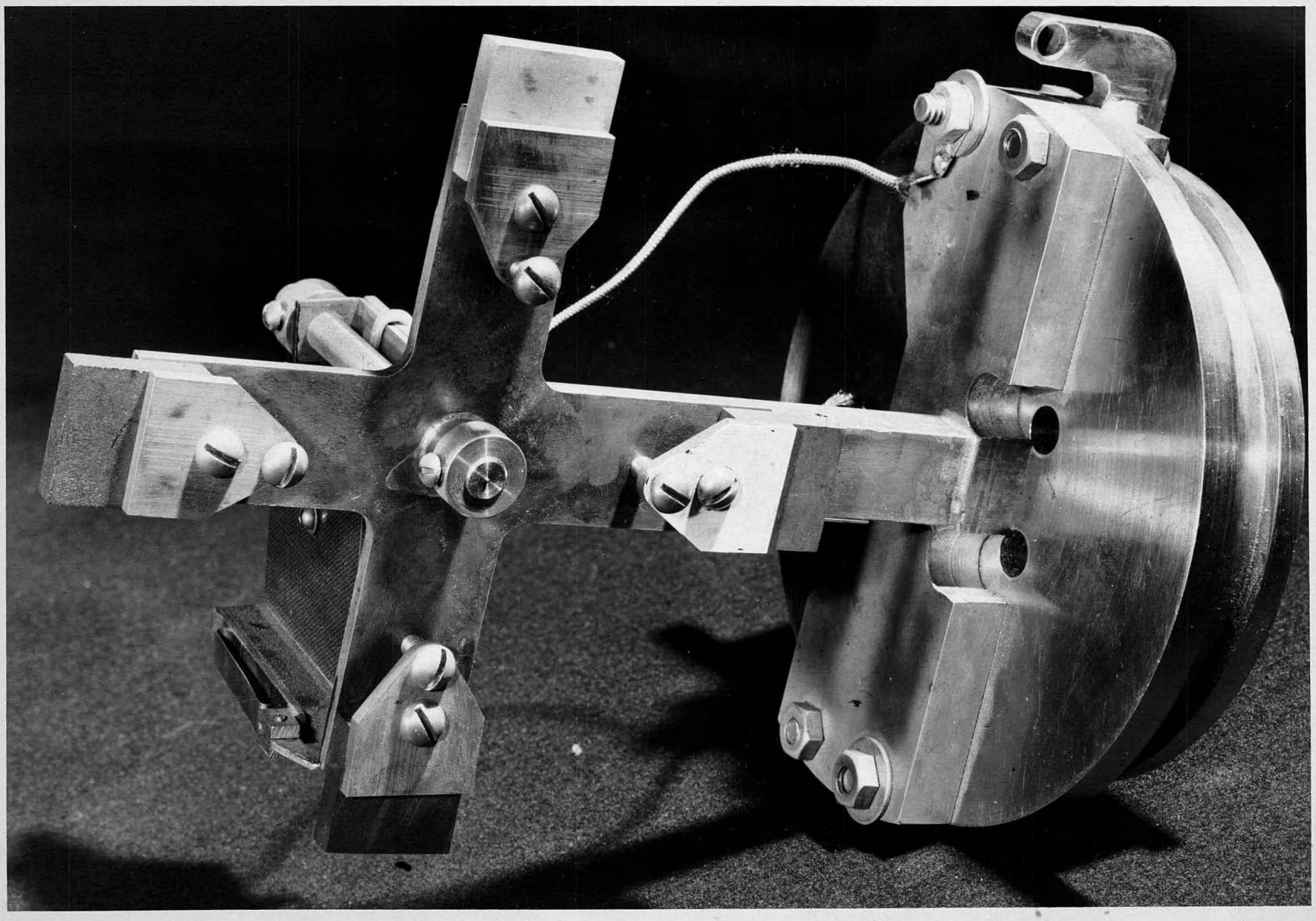

FIG. 6

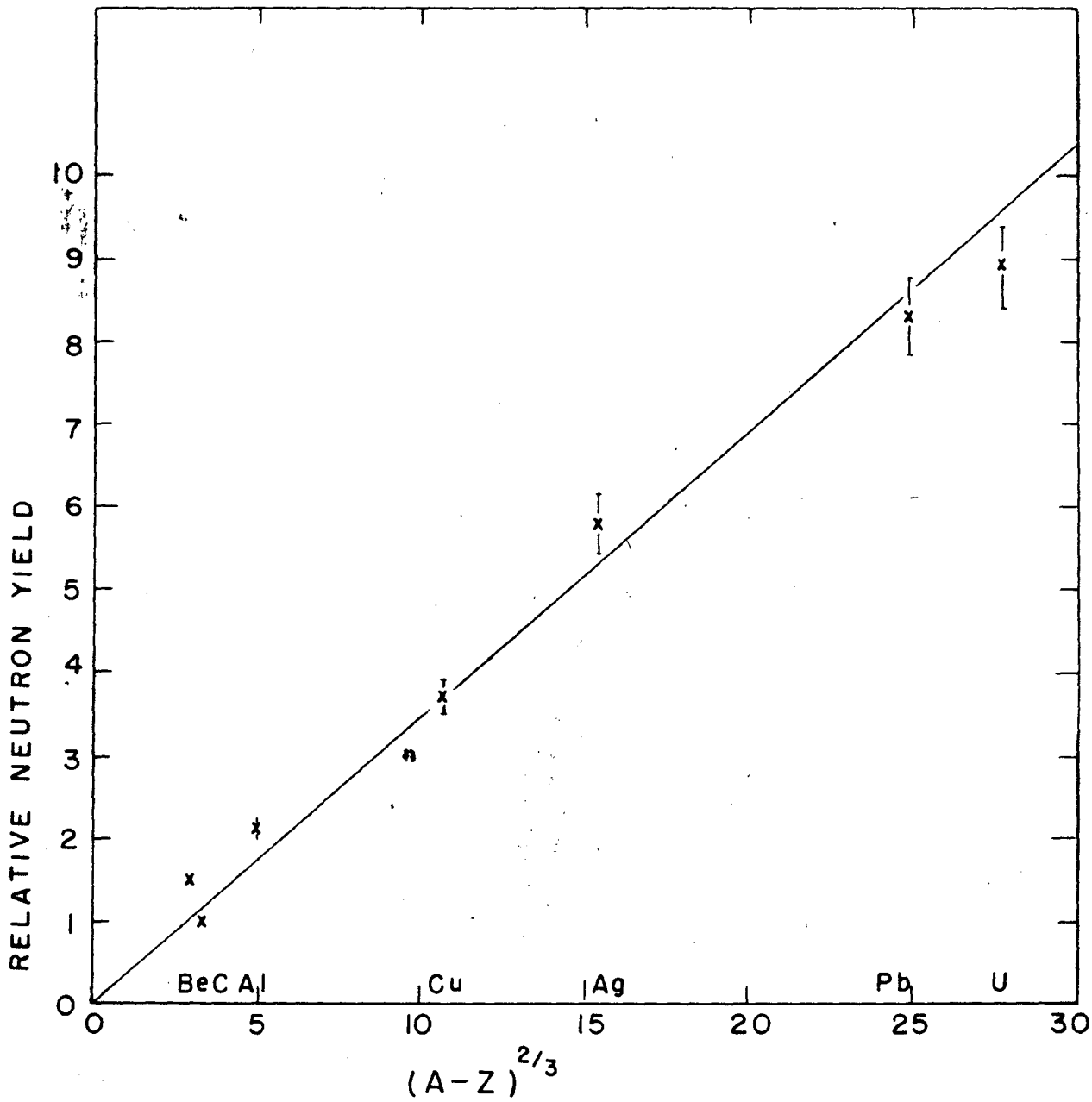
RELATIVE NEUTRON YIELD
0
1
2
3
4
5
6
7
8
9
10
BeC
Al
Cu
Ag
Pb
U
0
5
10
15
20
25
30
(A-Z)^2/3

FIG. 7

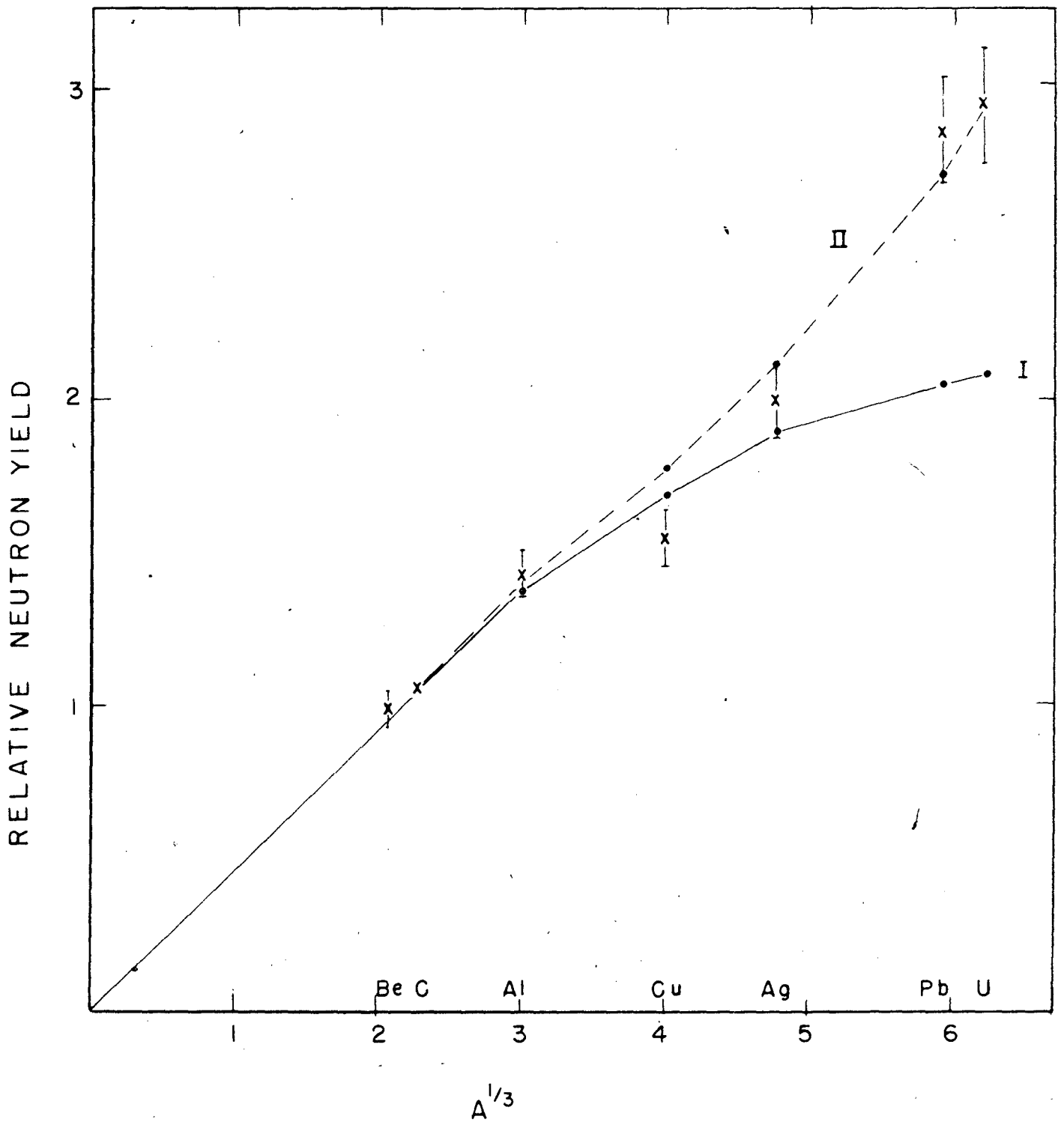

FIG. 8

14 057 - 1