Lawrence Berkeley National Laboratory
Recent Work

**Title**
A New Procedure for Measuring Contact Angle

**Permalink**
https://escholarship.org/uc/item/99w1h6v2

**Authors**
Concus, P.
Finn, R.

**Publication Date**
1994-05-01

eScholarship.org Powered by the California Digital Library
University of California

LBL-35669
UC-405

# Lawrence Berkeley Laboratory

UNIVERSITY OF CALIFORNIA

## Physics Division

**Mathematics Department**

To be presented at the International Workshop on Short-Term Experiments under Strongly Reduced Gravity Conditions, Bremen, Germany, July 4–7, 1994, and to be published in the Proceedings

# A New Procedure for Measuring Contact Angle

P. Concus and R. Finn

May 1994

REFERENCE COPY
Does Not
Circulate
Bldg. 50 Library.
LBL-35669
Copy 1

Prepared for the U.S. Department of Energy under Contract Number DE-AC03-76SF00098

## DISCLAIMER

This document was prepared as an account of work sponsored by the United States Government. While this document is believed to contain correct information, neither the United States Government nor any agency thereof, nor the Regents of the University of California, nor any of their employees, makes any warranty, express or implied, or assumes any legal responsibility for the accuracy, completeness, or usefulness of any information, apparatus, product, or process disclosed, or represents that its use would not infringe privately owned rights. Reference herein to any specific commercial product, process, or service by its trade name, trademark, manufacturer, or otherwise, does not necessarily constitute or imply its endorsement, recommendation, or favoring by the United States Government or any agency thereof, or the Regents of the University of California. The views and opinions of authors expressed herein do not necessarily state or reflect those of the United States Government or any agency thereof or the Regents of the University of California.

LBL-35669

# A NEW PROCEDURE FOR MEASURING CONTACT ANGLE

Paul Concus
Lawrence Berkeley Laboratory
and
Department of Mathematics
University of California
Berkeley, CA 94720

Robert Finn
Department of Mathematics
Stanford University
Stanford, California 94305

May 1994

*This work was supported in part by the Applied Mathematical Sciences Subprogram of the Office of Energy Research, U.S. Department of Energy, under Contract Number DE-AC03-76SF00098, by the National Aeronautics and Space Administration under Grant NCC3-329, and by the National Science Foundation under Grant DMS89-02831. Part of the work was facilitated by the Undergraduate Research Opportunities Program at Stanford University.

# A NEW PROCEDURE FOR MEASURING CONTACT ANGLE

Paul Concus
Lawrence Berkeley Laboratory and Department of Mathematics
University of California
Berkeley, CA 94720, USA

Robert Finn
Department of Mathematics
Stanford University
Stanford, CA 94305, USA

We describe here some recent work regarding our mathematical design of apparatus that exploits microgravity conditions for accurate experimental determination of contact angle. The underlying motivation for the procedures rests on a discontinuous dependence of the capillary free surface interface $S$ on the contact angle $\gamma$, in a cylindrical capillary tube whose section (base) $\Omega$ contains a protruding corner with opening angle $2\alpha$, see Figure 1. Specifically, in a gravity-free environment, $\Omega$ can be chosen so that, for all sufficiently large fluid volume, the height of $S$ is uniquely determined as a (single-valued) function $u(x, y)$ entirely covering the base; the height $u$ is bounded over $\Omega$, uniformly in $\gamma$ throughout the range $\left|\gamma - \frac{\pi}{2}\right| \leq \alpha$, while for $\left|\gamma - \frac{\pi}{2}\right| > \alpha$ the fluid will necessarily move to the corner and uncover the base, rising to infinity (or falling to negative infinity) at the vertex, regardless of volume. Background details and historical discussion are given in [1], [2], [3]. We mention here only that procedures based on the phenomenon promise excellent accuracy when $\gamma$ is close to $\pi/2$ but may be subject to experimental error when $\gamma$ is close to zero (or $\pi$), as the "singular" part of the domain over which the fluid accumulates (or disappears) when a critical angle $\gamma_0$ is crossed then becomes very small and may be difficult to observe. In what follows, we ignore the trivial case $\gamma = \pi/2$ (planar free surface interface), to simplify the discussion.

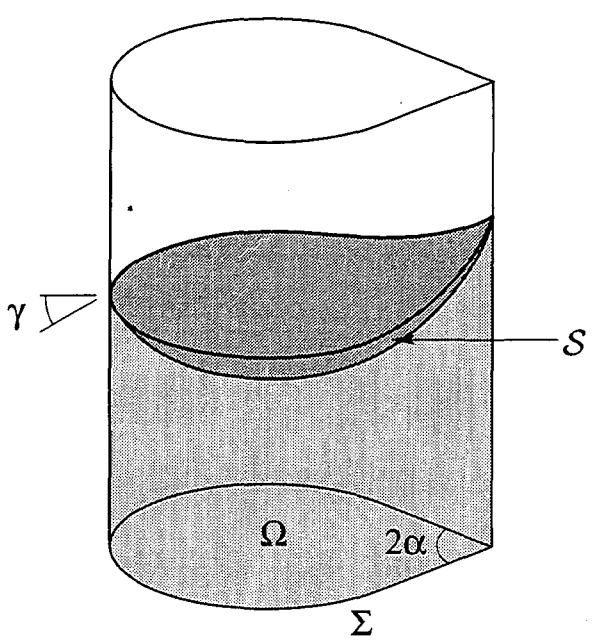


Figure 1. *Capillary surface in cylindrical tube with protruding corner in section.*

As a way to overcome the experimental difficulty, "canonical proboscis" sections $\Omega$ were introduced in [4]. These domains consist of a circular arc attached symmetrically to a (sym-

metric) pair of curves described by

$$x+C = \sqrt{{R_0}^2 - y^2} + R_0 \sin\gamma_0 \cdot \ln \frac{\sqrt{{R_0}^2 - y^2}\cos\gamma_0 - y\sin\gamma_0}{R_0 + y\cos\gamma_0 + \sqrt{{R_0}^2 - y^2}\,\sin\gamma_0}, \tag{1}$$

and meeting at a point $P$ on the $x$-axis, see Figure 2. Here $R_0$, as well as the particular points of attachment, may be chosen arbitrarily. The case $\gamma_0 < \pi/2$ is illustrated; the supplementary one $\gamma_0 > \pi/2$ is reduced to that one on replacing the height $u$ by its negative. We discuss here only the case $\gamma_0 < \pi/2$ in what follows. The (continuum of) circular arcs $\Gamma_0$ are all horizontal translates of a given such arc, of radius $R_0$ and with center on the $x$-axis, and the curves (1) have the property that they meet all the arcs $\Gamma_0$ in the constant angle $\gamma_0$. If the radius $\rho$ of the circular boundary arc can be chosen in such a way that

$$|\Sigma| R_0 \cos\gamma_0 = |\Omega|, \tag{2}$$

then the arcs $\Gamma_0$ become extremals for a "subsidiary" variational problem ([5], see also [4, Chap. 6], [3]) determined by the functional

$$\Phi \equiv |\Gamma| - |\Sigma^*|\cos\gamma + \frac{|\Sigma|}{|\Omega|}|\Omega^*|\cos\gamma \tag{3}$$

defined over piecewise smooth arcs $\Gamma$, see Figure 3. ($|\Sigma|$ and $|\Omega|$ denote respectively the length of $\Sigma$ and area of $\Omega$.) It can be shown [5], [2] that every extremal for $\Phi$ is a subarc of a semicircle of radius $R_0$, with center on the side of $\Gamma$ exterior to $\Omega^*$, and that it meets $\Sigma$ in angles $\geq \gamma_0$ on the side of $\Gamma$ within $\Omega^*$, and $\geq \pi - \gamma_0$ on the other side of $\Gamma$ (and thus in

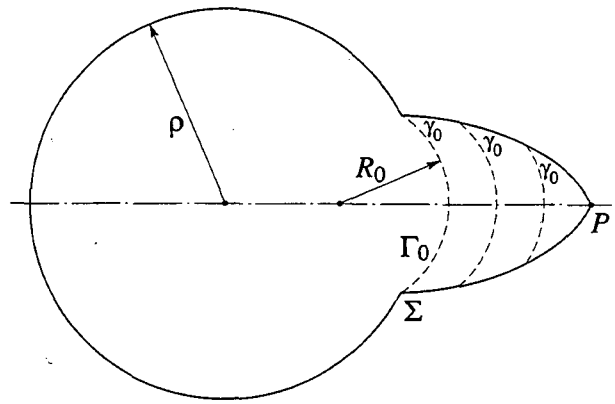


Figure 2. *Proboscis domain showing three members of the continuum of extremal arcs.*

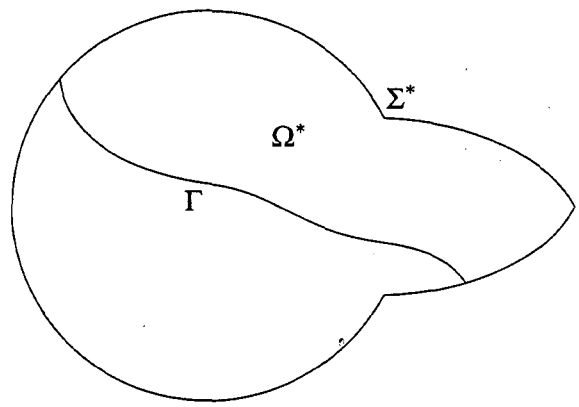


Figure 3. *Admissible configuration for variational problem.*

angle $\gamma_0$ within $\Omega^*$ whenever the intersection point is a smooth point of $\Sigma$). It is remarkable that whenever (2) holds, $\Phi = 0$ for every $\Omega^*$ that is cut off in the proboscis by one of the arcs $\Gamma_0$; see [4] and the references cited there.

In [4], a value for $\rho$ was obtained empirically from (2) in a range of configurations, and it was conjectured that the angle $\gamma_0$ on which the construction is based would be critical for the geometry. That is, a solution of the "capillary problem"

$$\operatorname{div} Tu = \frac{|\Sigma|}{|\Omega|}\cos\gamma \quad \text{in } \Omega,$$

$$\nu \cdot Tu = \cos\gamma \quad \text{on } \Sigma,$$

where

$$Tu \equiv \frac{\nabla u}{\sqrt{1+|\nabla u|^2}}$$

and $\nu$ is the exterior unit normal on $\Sigma$, should exist in $\Omega$ if and only if $|\gamma - \frac{\pi}{2}| < |\gamma_0 - \frac{\pi}{2}|$. Additionally, the surface height should approach infinity as $|\gamma - \frac{\pi}{2}| \nearrow |\gamma_0 - \frac{\pi}{2}|$, exactly in the region swept out by the arcs $\Gamma_0$. And if upper and lower bounds for $\rho$ can be found, independent of $\gamma$ and of the points of attachment of the circular arc portion of the boundary, then the section $\Omega$ can be designed so as to be contained in a fixed rectangle and so that the "singular" $\Omega_0{}^*$ contains another fixed rectangle, for all choices of $\gamma$ bounded away from $\pi/2$. If $\gamma$ is close to $\pi/2$ then previously applied techniques for determining contact angle in corner domains with planar walls are effective, see [6, p.136]. Thus, the experimental apparatus can be built so as to remain bounded in size, and so that the observed singular behavior occurs over a fixed rectangle, for all eventual measurements in the range of $\gamma$ for which the previous techniques do not apply well.

For the above conjectures, which form the basis of our proposed procedure and for which the mathematical underpinnings were proved only partially in [4], complete mathematical proofs have been obtained. Specifically, it is shown in [7]:

**Theorem 1.** *For any $\gamma_0$ in the range $0 \le \gamma_0 < \pi/2$ and for any point of attachment, there exists a unique solution $\rho$ of (2) as an unbranched continuation of the unique value $\rho = 2R_0 \cos\gamma_0$ obtained when the point of attachment is at $P$, and there holds $R_0 \cos\gamma_0 \le \rho \le 2R_0$.*

**Theorem 2.** *Let $\rho$ be determined as in Theorem 1 for a proboscis domain $\Omega$, and let $\Gamma$ be a subarc in $\Omega$ of a semicircle of radius $R_0$. Let $\Omega_0^*$ be the portion of $\Omega$ cut out by $\Gamma$ on the side exterior to its center. Then $\Phi[\Omega_0^*;\gamma_0] \ge 0$, equality holding if and only if $\Gamma$ is one of the extremal arcs indicated in Figure 2.*

The stated geometrical properties of $\Omega$ follow from Theorem 1, from the relation $2\alpha = \pi - 2\gamma_0$ for the angle $2\alpha$ formed at $P$, and from the convexity properties of the curves (1) that are considered. Using general results established in [5] and in [2, Chap. 6], Theorem 2 establishes that $\gamma_0$ is the critical angle and also that there are no "extraneous" extremals, that is, the proboscis domain swept out by the extremal arcs $\Gamma$ indicated in Figure 2 is exactly the domain in which the fluid height will rise unboundedly as $|\gamma - \frac{\pi}{2}| \nearrow |\gamma_0 - \frac{\pi}{2}|$. Figure 4 is taken from [8] and shows results of computer calculations for a particular proboscis domain with $\rho = 1$ and proboscis length approximately 2/3, for four contact angles $\gamma$ decreasing to the critical $\gamma_0 = 30°$. The individual figures show projections of the three dimensional surfaces, cut along the plane of symmetry, with height above the center of the circular arc portion indicated according to the scale of shadings shown. It is seen that although the fluid rise in the corner is not discontinuous as occurs for a planar wedge, the rise height in the proboscis is relatively modest until $\gamma$ becomes very close to $\gamma_0$, and then becomes extremely rapid (at $\gamma = \gamma_0$

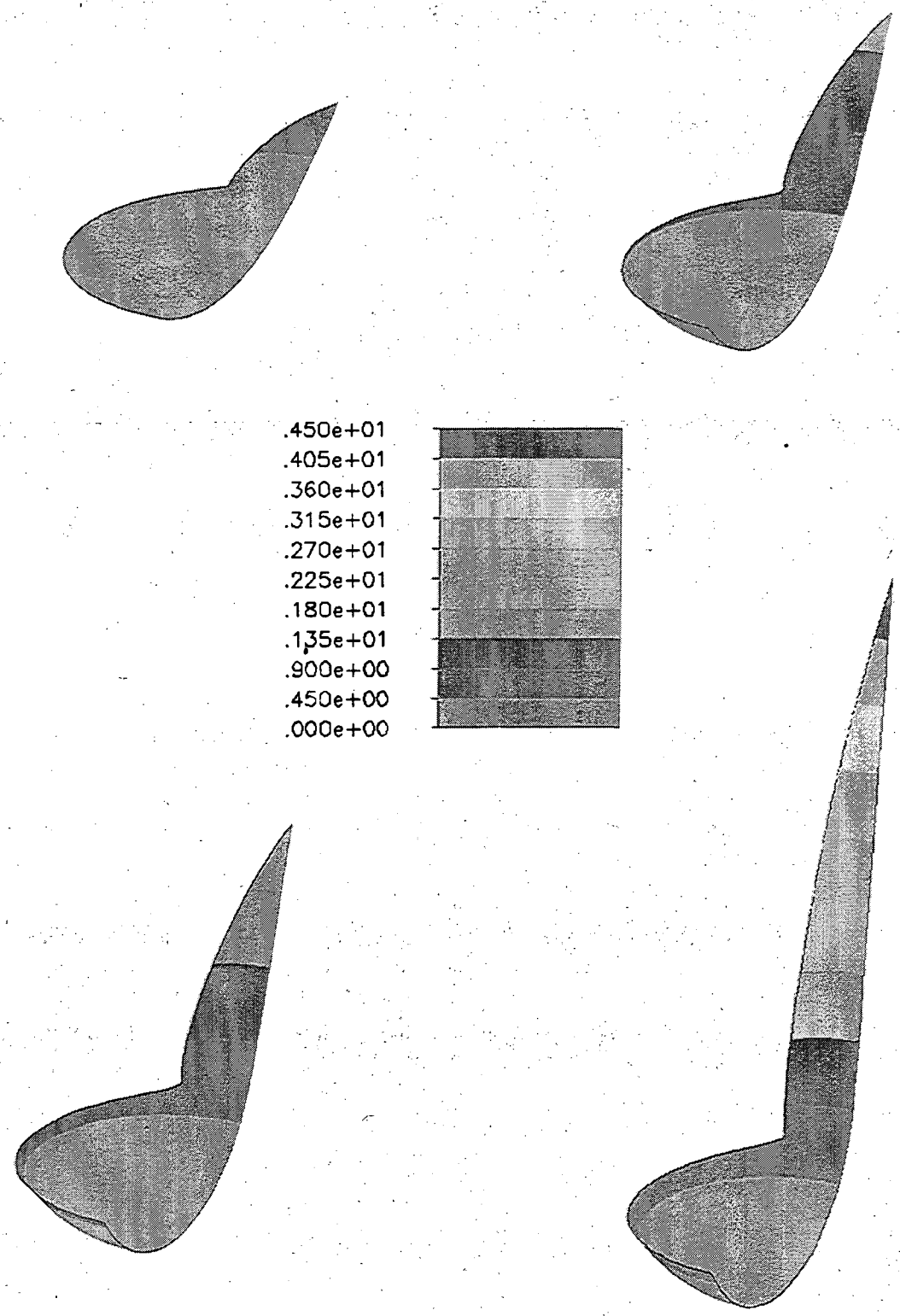


Figure 4. *Equilibrium interfaces, proboscis domain*; $\gamma = 60°, 40°, 35°, 31°$; $\gamma_0 = 30°$.

the rise height would be infinite). The proximity of $\gamma$ to $\gamma_0$ could thus be readily evidenced by sensors close to the vertex, near the top of a container of carefully selected height. The method appears to open a prospect for contact angle measurements more accurate than can be obtained with presently available methods.

The proposed procedure is scheduled for testing, in collaboration with M. Weislogel, in a drop tower and on board the forthcoming USML-2 Space Shuttle flight. The fabricated test containers have two diametrically opposed canonical proboscis extensions to a circular cylinder, instead of just the one shown in Figure 2. These extensions will correspond to differing critical contact angles, to allow bracketing of the determined contact angle value.

This work was supported in part by the Applied Mathematical Sciences Subprogram of the Office of Energy Research, Department of Energy, under Contract Number DE-AC03-76SF00098, by the National Aeronautics and Space Administration under Grant NCC3-329, and by the National Science Foundation under Grant DMS89-02831. Part of the work was facilitated by the Undergraduate Research Opportunities Program at Stanford University.

## References

1. R. Finn: *On the contact angle in capillarity.* Proc. Third Intl. Coll. Diff. Eqns., Plovdiv, VSP, Zeist, 1993, 55–62.
2. R. Finn: *"Equilibrium Capillary Surfaces".* Springer-Verlag, New York, 1986. Russian translation (with Appendix by H.C. Wente) Mir Publishers, 1988.
3. P. Concus and R. Finn: *Dichotomous behavior of capillary surfaces in zero gravity.* Microgravity Sci. Technol. 3 (1990) 87–92; Errata, 3 (1991) 230.
4. B. Fischer, R. Finn: *Non-existence theorems and measurement of capillary contact angle.* Zeit. Anal. Anwend. 12 (1993) 405–423.
5. R. Finn: *A subsidiary variational problem and existence criteria for capillary surfaces.* J. reine angew. Math. 353 (1984) 196–214.
6. P. Concus, R. Finn, M. Weislogel: *Drop tower experiments for capillary surfaces in an exotic container.* AIAA J. 30 (1992) 134–137.
7. R. Finn, T. Leise: *On the canonical proboscis.* Zeit. Anal. Anwend., to appear.
8. P. Concus, R. Finn, F. Zabihi: *On canonical cylinder sections for accurate determination of contact angle in microgravity.* In: *"Fluid Mechanics Phenomena in Microgravity"*, AMD Vol. 154, Amer. Soc. Mech. Engineers (ed.: D. A. Singer and M. M. Weislogel) New York, 1992, 125–131.

LAWRENCE BERKELEY LABORATORY
UNIVERSITY OF CALIFORNIA
TECHNICAL INFORMATION DEPARTMENT
BERKELEY, CALIFORNIA 94720