Title

A CENTRIFUGAL-PUMP TARGET ASSEMBLY FOR THE CYCLOTRON BOMBARDMENT OF LIQUIDS

Authors

Garrison, Warren M.
Haymond, Herman R.
Powell, Harry
et al.

Publication Date

1952-05-01

UCRL-1809

UNCLASSIFIED

UNIVERSITY OF CALIFORNIA – BERKELEY

RADIATION LABORATORY

UCRL-1809
Unclassified Instrumentation

UNIVERSITY OF CALIFORNIA

Radiation Laboratory

Contract No. W-7405-eng-48

A CENTRIFUGAL-PUMP TARGET ASSEMBLY FOR THE CYCLOTRON BOMBARDMENT OF LIQUIDS

Warren M. Garrison, Herman R. Haymond, Harry Powell, Charles Corum
& Joseph G. Hamilton

May, 1952

Berkeley, California

A CENTRIFUGAL-PUMP TARGET ASSEMBLY FOR THE CYCLOTRON BOMBARDMENT OF LIQUIDS

Warren M. Garrison, Herman R. Haymond, Harry Powell, Charles Corum
& Joseph G. Hamilton

Division of Medical Physics, Crocker Laboratory,
Radiation Laboratory, Division of Experimental
Medicine & Radiology, University of California,
Berkeley and San Francisco

In the use of the cyclotron as a radiation source for the study of the chemical effects of high energy radiation on liquids, it is frequently desirable, because of the high energy input available, to bombard the liquid as it is cycled at a known rate through the irradiation zone from a reservoir which is under a controlled atmosphere. This procedure makes it possible to (1) utilize higher beam intensities (2) obtain maximum amounts of reaction products (3) regulate the temperature of the liquid during bombardment and (4) sample both the liquid and gas phase during the course of the bombardment. The present paper describes a centrifugal pump target assembly into which are incorporated these principles and which has been used for the study of the chemical effects of high energy particles on aqueous solutions. Because of the well known influence of contaminants on the radiation chemistry of aqueous solutions, the assembly is so designed that those parts of the target system which contact the liquid are fabricated of pyrex glass with the exception of a thin foil "window" which admits the cyclotron beam into the irradiation chamber. This foil, which may be of platinum, gold, tungsten mica etc, is affixed in such a manner that gasket material is not required at the glass-metal interface.

The glass target pump and its operation are indicated schematically in Fig. 1. The solution to be irradiated is placed in a reservoir (A) which is connected to the centrifugal pump through a ground-glass joint. This joint and all other ground-glass connections including the stopcock (E) are lubricated with water. As the pump shaft (C) is rotated, liquid is drawn up to fill the pump chamber (B) and is returned to the storage vessel through the annular space at (D). Part of the solution may be returned through the by-pass (E) which also serves as a vent for gas produced in the bombardment chamber. The cyclotron beam enters the solution through the foil (F) which is retained by the bracket assembly (H). The mercury seal (G) permits irradiation under a controlled atmosphere. The reservoir (A) is equipped with a gas inlet port (I) and an exit port which can be seen in Fig. 2. The temperature is measured by the thermometer (J). Cooling is obtained by thermostating the bath (K). The liquid may be sampled by pipetting from the reservoir directly or by passing a fraction of the circulating solution through the stopcock (E). Photographs of the pump assembly are shown in Figs 2 and 3.

A diagram of the complete target assembly expanded is shown in Fig. 4. The cyclotron beam enters the front plate (1) and is delimited by the water cooled aperture (2). The defined beam then passes through a one mil aluminum foil (4) which is retained in position by the plate (3) and the shutter assembly (5,5a). The aperture assembly is supported on the bracket (6) which clamps the platinum target window (6b) to the glass pump (7). The rubber cushion (6a) is placed in front of the glass-metal interface. The bracket (6) is in turn fastened to the upright (9) which is an integral part of the target carriage.

The beam monitoring circuit is shown schematically in Fig. 5. The front plate (1), the defining aperture (2) and the shutter assembly (3 to 6) are electrically insulated from each other and from the target carriage. The delimited beam which passes through the aperture (2) is totally absorbed in the target chamber. The shutter (5b), used to monitor the beam until the desired cyclotron operating conditions are obtained, may be lowered by remote control. Since all parts of the assembly between the target chamber and the aluminum window (4) are in electrical contact, ionization produced by the beam in the air space between does not introduce errors in beam current integration. Calorimetric data, to be published separately, recently obtained by Mr. Boyd Weeks of this laboratory show that the integrating circuit described in Fig. 5 records the beam current adsorbed in the target chamber with an accuracy limited only by the cyclotron integrating circuit.

Experimental results which have been obtained using the target assembly described here will be reported elsewhere.

We wish to thank Dr. T. Putnam, Mr. B. Rossi and the staff of the Crocker Laboratory 60-inch cyclotron for many helpful discussions on the design and fabrication of the apparatus described.

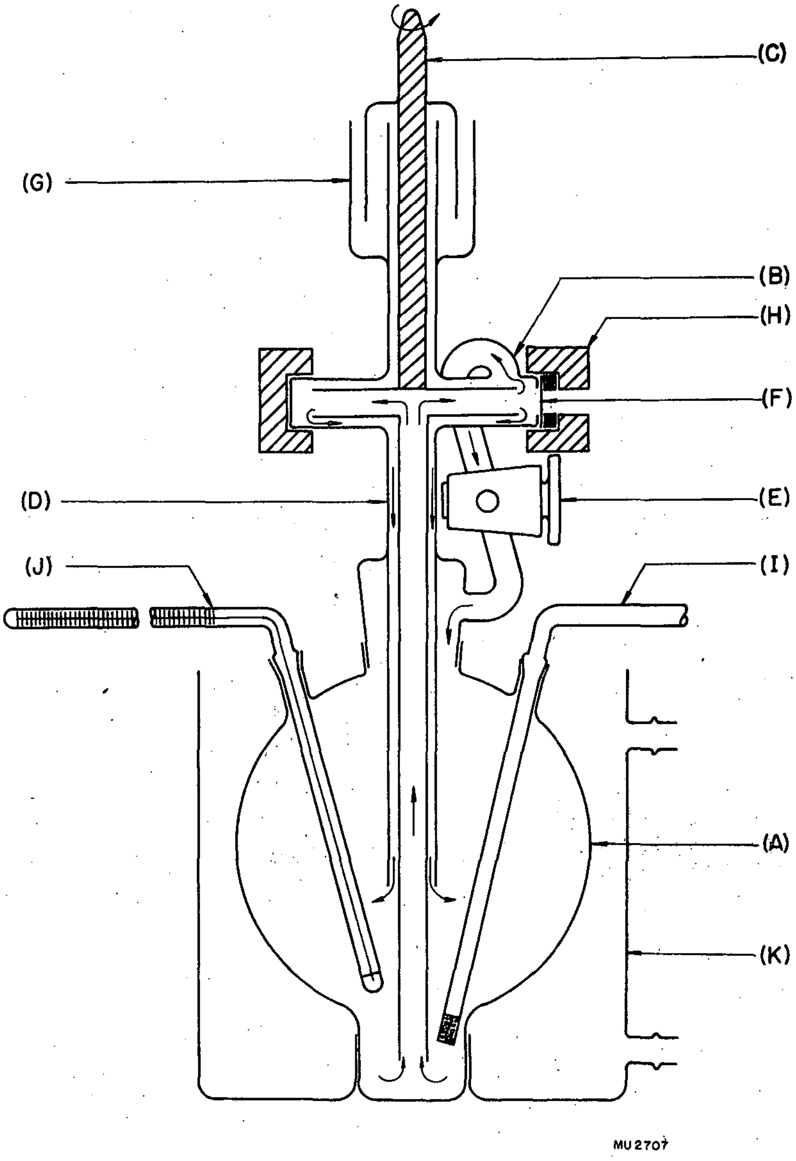

Fig. 1

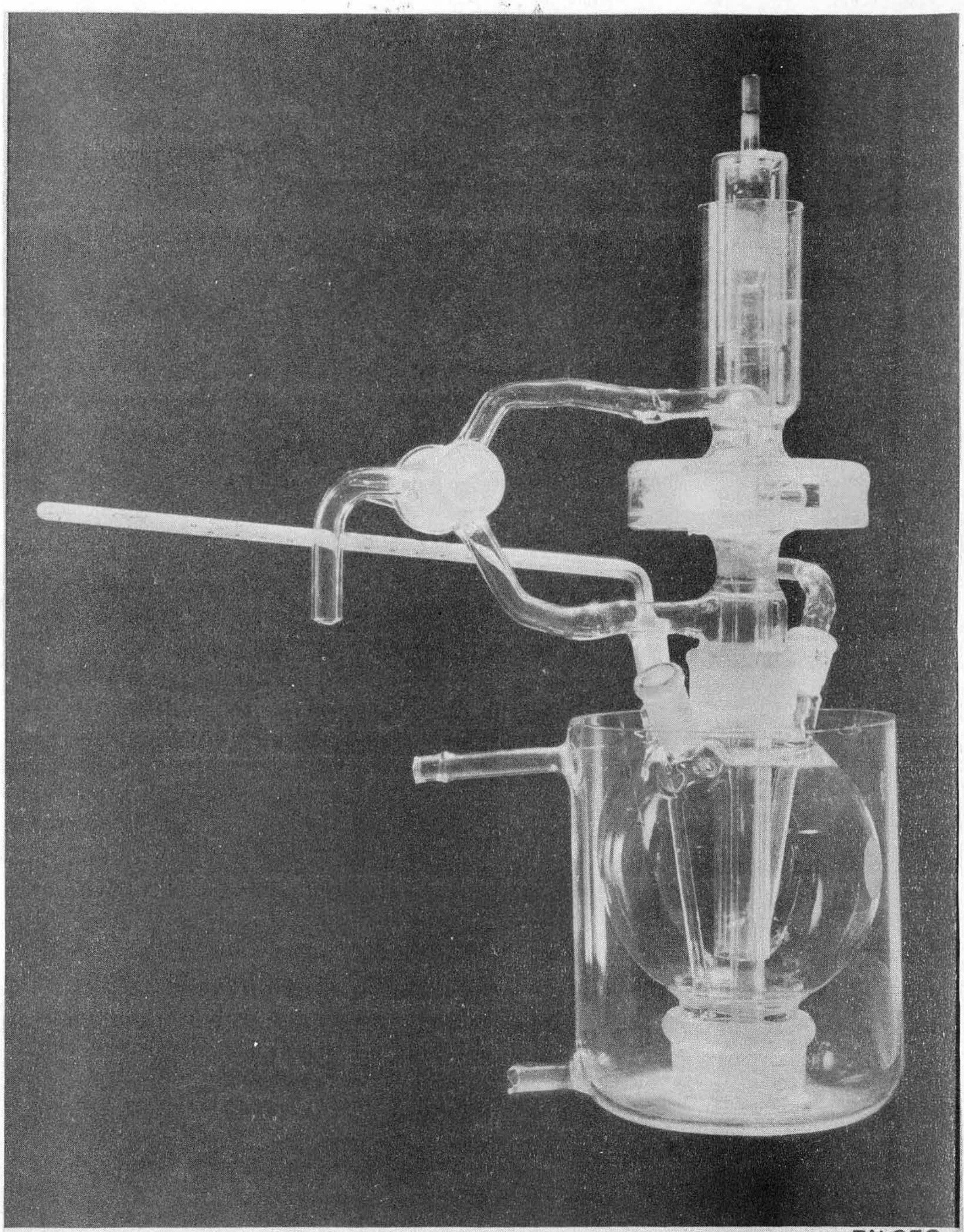

Fig. 2

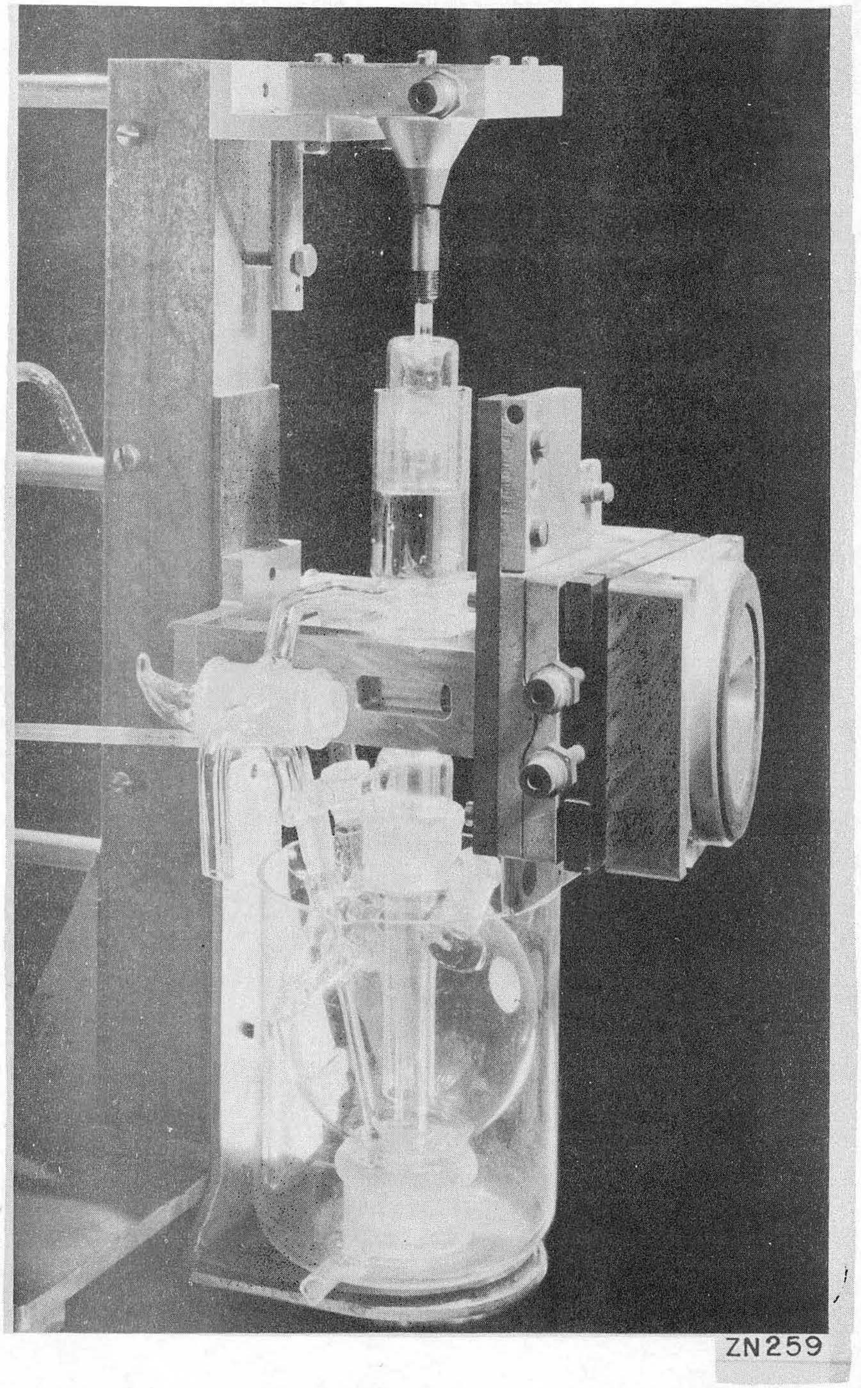

Fig. 3

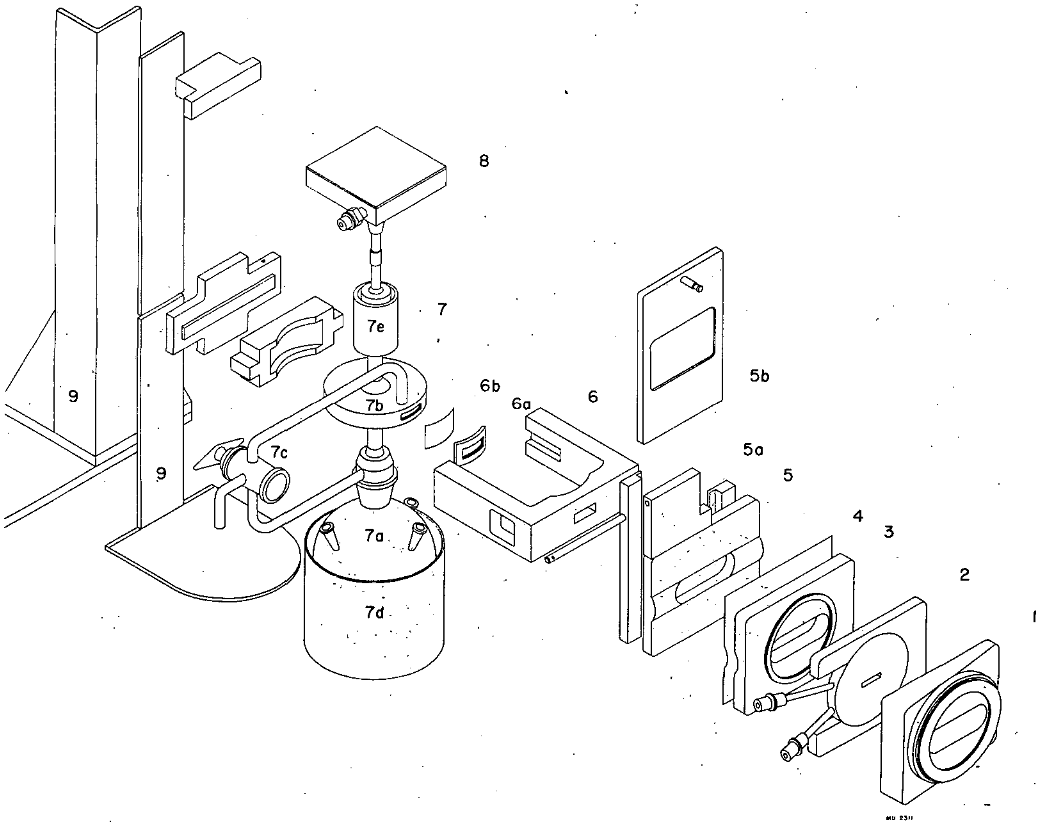

Fig. 4

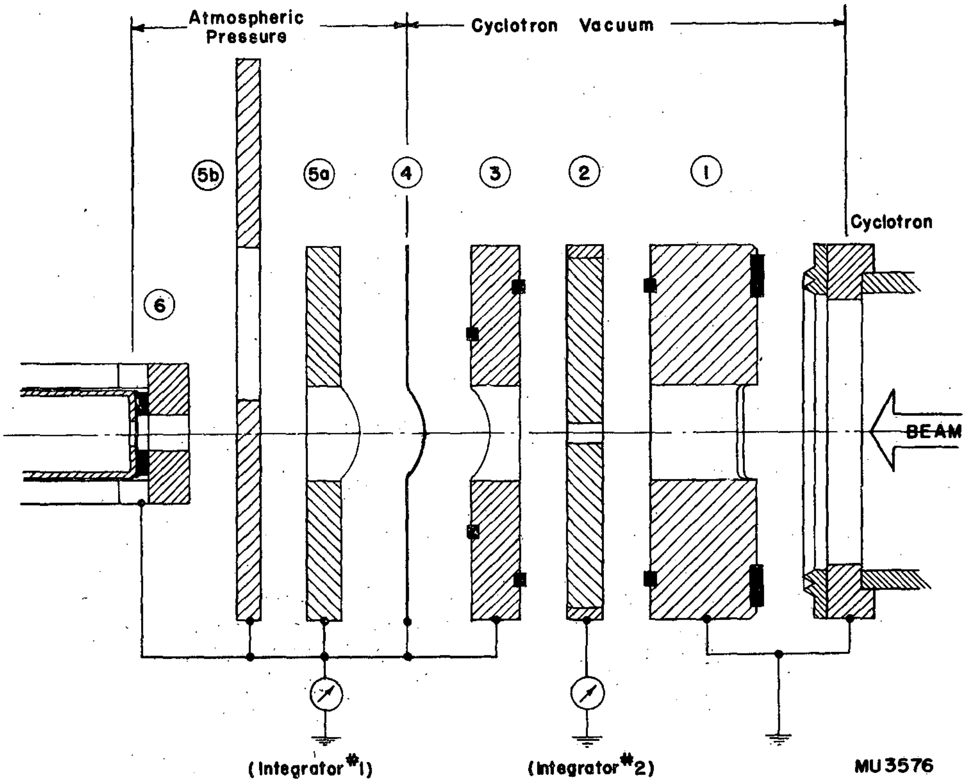
Atmospheric Pressure
Cyclotron Vacuum
Cyclotron
⑥
5b
5a
④
③
②
①
BEAM
(Integrator #1)
(Integrator #2)
MU3576

Fig. 5